LIBRARY
SUPREME COURT, U.S.

No. 640

DEC 4 1957
JOHN T. FEY, Clerk

RECORD

United States Court of Appeals

FOR THE EIGHTH CIRCUIT

Nos. 15,725 and 15,729
CIVIL

BRIGGS & STRATTON CORPORATION,
Appellant,

vs.

CLINTON MACHINE CO., INC.,
Appellee.

CLINTON MACHINE CO., INC.,
Cross-Appellant,

vs.

BRIGGS & STRATTON CORPORATION,
Cross-Appellee.

Appeals from the United States District Court for the Northern District of Iowa

VOLUME I
Pages 1-208

INDEX

Page

VOLUME I

Complaint 2

Answer and Counterclaim 5

Reply to Counterclaim 15

Application of Prior Art Cited 17

Notice of Prior Public Use and Additional Prior Art 19

Notice of Prior Public Use and Sale 21

Notice of Additional Prior Art 22

Trial Proceedings—April 18-22, 1955

Evidence for Plaintiff

Hugh S. Brown
— Direct Examination 23

Kenneth C. Agar
— Direct Examination 31

Hugh S. Brown (Recalled)
— Direct Examination 45
— Cross Examination 57
— Redirect Examination 68
— Recross Examination 69
— Redirect Examination 69

Joseph Robert Harkness
— Direct Examination 69
— Cross Examination 75

E. Eugene Kohls
— Direct Examination 78
— Cross Examination 108

Page

Evidence for Defendant

Deposition of Arthur J. Eaton 118
Deposition of George Rose 118
Clarence Damon
— Direct Examination 123
Bernard J. Cantor
— Direct Examination 126
— Cross Examination 186

Findings of Fact, Conclusions of Law and Order for Judgment 190

Judgment 205

Order Ruling on Post-Judgment Motions of the Defendant 207

VOLUME II

Supplemental Trial Proceedings—June 4-6, 1956

Evidence for Plaintiff

Hugh S. Brown
— Direct Examination 209
— Cross Examination 210
Harry Shore
— Direct Examination 212
— Cross Examination 225
— Redirect Examination 238
— Recross Examination 241

Evidence for Defendant

Deposition of Harold E. Bruns
— Direct Examination 243

Page

— Cross Examination 250
— Redirect Examination 252

Stipulation 256

Clarence P. Damon
— Direct Examination 257

Stipulation 258

Clarence P. Damon
— Direct Examination (Continued) 260

Stipulation 261

Clarence P. Damon
— Direct Examination (Continued) 264

Stipulation 264

Clarence P. Damon
— Direct Examination (Continued) 267

Carl Wolcott
— Direct Examination 268
— Cross Examination 293

Cletus V. Erlacher
— Direct Examination 294

Clarence P. Damon (Recalled)
— Direct Examination 322
— Cross Examination 335
— Redirect Examination 340

Rudolph L. Lowell
— Direct Examination 341
— Cross Examination 364

Leo J. Lechtenberg (Adverse)
— Direct Examination 368
— Cross Examination 385
— Redirect Examination 385

Page

Rebuttal Evidence for Plaintiff

— Stipulation 386

Leo J. Lechtenberg
— Direct Examination 388
— Cross Examination 391

Harry Shore
— Direct Examination 396

Harold E. Bruns
— Direct Examination 397
— Cross Examination 397

Hugh S. Brown
— Direct Examination 398
— Cross Examination 399
— Redirect Examination 402

Deposition of Warren C. Conover
— Direct Examination 402
— Cross Examination 404

Joseph Robert Harkness
— Direct Examination 408
— Cross Examination 410

Ernest A. Longenecker
— Direct Examination 414
— Cross Examination 428
— Redirect Examination 432

Surrebuttal Evidence for Defendant

Clarence P. Damon
— Direct Examination 433

Harold E. Bruns
— Direct Examination 434

Page

Cletus V. Erlacher
— Direct Examination 435

Re-rebuttal Evidence for Plaintiff

Ernest A. Longenecker
— Cross Examination 436

Findings of Fact, Conclusions of Law and Order for Judgment 438

Judgment 463

Notice of Appeal 464

Notice of Cross-Appeal 465

Relevant Docket Entries in District Court 466

EXHIBITS

VOLUME I

Plaintiff's Exhibits

5 — "Chart No. 1" 91

7 — "Chart No. 3" 81

8 — "Chart No. 5" 25

14 — Clinton Specification Sheet 33

14b — Clinton Letter Announcement 35

14c — Clinton General Specifications 37

14d — Blowup of Cuts on 14c 39

14d'— Blowup with Identifying Numerals 47

14e — Photo of Exhibit 4 Engine 41

14f — Photo of Exhibit 4 Engine 43

22 — Sketch—Modified Clinton Casting.....Facing 68

Page

VOLUME II

Defendant's Exhibits

D- 96 — Pages from H. H. Doehler: *Die Casting* 273

D- 98 — Pages from *Designing for Alcoa Die Castings* 283

D-105 — Article from *Southern Hardware*, January, 1951 297

D-109 — Reprint from *Electrical Merchandising*, June, 1951 305

D-110 — Reprint from *Electrical Merchandising*, January, 1956 313

Note: All patent copies are included in Volume III and are separately indexed in that volume.

RECORD

United States Court of Appeals

FOR THE EIGHTH CIRCUIT

Nos. 15,725 and 15,729
CIVIL

BRIGGS & STRATTON CORPORATION,
Appellant,

vs.

CLINTON MACHINE CO., INC.,
Appellee.

CLINTON MACHINE CO., INC.,
Cross-Appellant,

vs.

BRIGGS & STRATTON CORPORATION,
Cross-Appellee.

Appeals from the United States District Court
for the Northern District of Iowa

VOLUME I
Pages 1-208

COMPLAINT

(Filed December 9, 1954)

Now comes the plaintiff, Briggs & Stratton Corporation, and for its cause of action against the defendant, Clinton Machine Co., Inc., alleges as follows:

I.

Briggs & Stratton Corporation is a corporation duly organized and existing under the laws of the State of Delaware and having its principal office and place of business in the City of Milwaukee, Wisconsin.

II.

Clinton Machine Co., Inc., is a corporation duly organized and existing under the laws of the State of Michigan and having an office and place of business in the City of Maquoketa, Iowa, within this District and Division.

III.

The jurisdiction of this court is based upon the patent laws of the United States and particularly Title 35 U.S.C., Sections 271 and 281, and upon Title 28 U.S.C., Sections 1338, 1391 and 1400.

IV.

(a) On August 5, 1952 United States Letters Patent, No. 2,605,753, were duly and legally issued to Dorothy H. Madlé as the administratrix of Alain Madlé, deceased, for "Current Generating Device."

(b) On November 9, 1954 United States Letters Patent, No. 2,693,789, were duly and legally issued to Leo J. Lechtenberg for "Air-Cooled Internal-Combustion Engine."

* * *

(d) The entire right, title and interest in and to the aforesaid Letters Patent, Nos. 2,605,753 [and] 2,693,789 * * * and each of them, have been vested in the plaintiff Briggs & Stratton Corporation by instruments in writing duly recorded in the United States Patent Office.

V.

Since the issuance of the aforesaid Letters Patent, the defendant has been infringing the same, and each of them, by manufacturing and selling within this District and Division, and elsewhere in the United States, internal combustion engines embodying the inventions of said Letters Patent, and each of them; and defendant is now infringing the same and threatens to continue to infringe the same by making, using and selling such internal combustion engines, and defendant will continue to so infringe unless enjoined by this Court. Defendant has slavishly copied the inventions of the Letters Patent in suit, and each of them, as the same are embodied in engines manufactured by the plaintiff.

VI.

Defendant has been given notice by letter of its infringement of each of said Letters Patent.

VII.

Defendant has realized substantial profits from its infringement of said Letters Patent in suit, and each of them, which profits would otherwise have accrued to the plaintiff, and defendant's continued infringement of the Letters Patent in suit, and each of them, will result in further irreparable loss and damage to the plaintiff unless the defendant is enjoined by this Court.

Wherefore, plaintiff prays for:

An injunction perpetually restraining defendant, its agents and employees and those acting in concert with it, from further infringement of the aforesaid Letters Patent, and each of them;

A judgment for an accounting and an award of profits and damages to the plaintiff, as provided by law, and for recovery of costs and reasonable attorneys fees;

And for such other and further relief as the Court may deem meet and just.

Briggs & Stratton Corporation

By /s/ E. Marshall Thomas

O'Connor, Thomas, McDermott & Wright
609 Bank & Insurance Building
Dubuque, Iowa
Attorney for Plaintiff

Of Counsel:
/s/ Ira Milton Jones

110 East Wisconsin Ave.
Milwaukee 2, Wisconsin

December 9, 1954

ANSWER AND COUNTERCLAIM

(Filed January 14, 1955)

Comes now the Defendant, Clinton Machine Co., Inc., and as an Answer to the allegations in the Complaint set forth states:

1st Defense

That the Complaint fails to state any factual cause of action against this Defendant on which relief could be granted to the Plaintiff.

2nd Defense

This Defendant admits the allegations of Paragraphs 1, 2 and 3.

3rd Defense

Answering Paragraph 4, section:

(a) This Defendant admits that Letters Patent No. 2,605,753 were issued on August 5, 1952, to Dorothy H. Madle, as Administratrix of Alain Madle, deceased, but denies that said patent was duly and legally issued.

(b) This Defendant admits that on November 9, 1954, U.S. Letters Patent No. 2,693,789, were issued to Leo J. Lechtenberg, but denies that the said Letters Patent were duly and legally issued.

* * *

(d) Answering section (d), this Defendant states that it has no knowledge on which to base its belief as to whether or not the patents referred to in said section are vested in the Plaintiff herein by instruments in writing duly recorded in the U.S. Patent Office and, therefore, neither admits nor denies the same, but leaves the Plaintiff to its proof.

4th Defense

Defendant denies the allegations of Paragraph 5 and Paragraph 7 of the Complaint, and admits the allegations of Paragraph 8.

5th Defense

This Defendant avers that the claims of Patent No. 2,605,753 [and] Patent No. 2,693,789, * * * which Patents are set forth in the Complaint, are each and all of them invalid and void, because the invention set out in said Letters Patents was patented or described in certain printed publications prior to the patentees' alleged invention thereof, or more than one year prior to patentees' applications for said Letters Patents on which said Letters Patents issued; and because in view of the prior art, prior to the date of the patentees' alleged invention of the subject matter of the said applications, that said patents set out in said Bill of Complaint, and each of them, have required no invention to produce the said alleged improvement set out in any of said Letters Patents; and because said alleged improvement covered by each and all of the claims of said Letters Patents, and each of them, at the date of the respective patentee's invention thereof, was not a patentable invention or improvement, within the meaning of the law, and not proper subject matter for Letters Patent of the United States; and because the respective patentees named in said Letters Patents was not the original and the first inventor or discoverer of the invention purported to be covered thereby.

6th Defense

This Defendant avers that the claims of Patent No. 2,- each and all of the claims of each of the said Letters Patents are invalid in view of Letters Patents which are

set out in Exhibit A which is attached hereto and made a part hereof, and in view of diverse and numerous other patents of the United States and foreign countries, of which this Defandant is not at this time fully informed and which this Defendant begs leave to more fully and completely identify upon this Defendant becoming more fully informed of the same.

7th Defense

This Defendant avers, upon information and belief, that each of the claims of each of the patents referred to in the Bill of Complaint, is invalid, null and void, because the subject matter of said claims was well known and was described in printed publications in the United States and foreign countries more than one year prior to the filing of the applications on which said patents issued, and particularly in advertising sheets and catalogue sheets issued by this Defendant; and in other publications, the nature and identity of such other publications not being at this time known to this Defendant, and this Defendant prays leave to further identify them upon obtaining more information as to the identity of the same.

8th Defense

This Defendant avers that all and each of the claims of each of the said Letters Patents are invalid, null and void, because the subject-matter of said claims was, prior to the alleged invention and the applications filed by the respective patentees, more than one year prior to the filing of the applications on which said patents issued, known to and used by others within the United States, and particularly by this Defendant, and that prior to the alleged patentees' alleged invention of the subject

matter of the respective patents and more than one year prior to the filing of the respective applications on which each of said patents issued, the subject matter of said patents, and each of them, had been manufactured and sold throughout the United States by this Defendant, and by others, and the identity of said others is not fully known to this Defendant at this time, and this Defendant prays leave to further identify the same upon becoming more fully informed as to the identity of such others.

9th Defense

This Defendant avers that each and all of the claims of each of said patents set out in the Complaint are invalid, null and void, because said claims, and each of them, are ambiguous, indefinite, and expressed in uncertain terms, and do not particularly point out and definitely claim any part of the structure disclosed and described in the specifications of said patents.

10th Defense

That all of the claims of each of said patents set out in the Complaint have been so narrowed and restricted by amendments in the prosecution of the application as to narrow and restrict the same so that none of any of said patents could cover or be infringed by articles manufactured or sold by this Defendant, and the Plaintiff is estopped to assert such interpretation of said claims.

11th Defense

That the claims of each of said patents set out are invalid, null and void, as the claims of each of said patents attempt to define subject matter which is not disclosed in the patent.

12th Defense

That all of the claims of each of the patents referred to in the Complaint are invalid in that they do not properly define the alleged invention set out in the respective patent, and because they are too broadly indefinite and functional at the precise point of invention and novelty.

13th Defense

That the subject matter of the U.S. Letters Patent No. 2,693,789 * * *, set out in the Complaint and covered by the claims thereof, was in public use and on sale for more than one year prior to the filing of said applications, and that the patentee of said Letters Patents and his attorneys and agents, and the assignee of said Letters Patents, knew of such subject matter being in public use and on sale in the United States for over a year, but concealed such fact from the officials of the United States Patent Office, and as a consequence thereof, said Letters Patents were fraudulently and deceitfully obtained.

* * *

15th Defense

That the application for Letters Patent No. 2,605,753, which was filed by Dorothy H. Madle, as Administratrix of the Estate of Alain Madle, deceased, as a continuation of an application previously filed by Alain Madle, and abandoned, discloses and covers subject matter which was not the invention of the said Alain Madle, and which was not embraced by or disclosed in or covered by the patent applications previously filed by said Alain Madle, and that at the time of the filing of the application on which Patent No. 2,605,753, issued to this Plaintiff, its agents and attorneys knew that such application con-

tained other subject matter than the invention of the said Alain Madle, and particularly as disclosed and set forth in the applications previously filed by the said Alain Madle, and that with fraudulent intent and purpose concealed such fact from Dorothy H. Madle, Administratrix, and while so concealing such fact had the said Dorothy H. Madle sign the application and swear to the statutory Oath forming a part of the application and thus perpetrating upon the officials of the United States Patent Office fraud and deceit and thereupon had said Letters Patent No. 2,605,753, surreptitiously issued; and that in view of such fraudulent conduct, said Letters Patent No. 2,605,753, and each and all of the claims thereof, is invalid, null and void.

16th Defense

That the specifications and claims of each of said patents set out in said Complaint are calculated to deceive and mislead the public because of ambiguity and needless multiplication of nebulous claims, and said patents are, therefore, null and void.

Wherefore, this Defendant prays that the Complaint be dismissed with costs and attorney's fees to this Defendant, and such other relief as in equity this Defendant may be entitled to.

COUNTER-CLAIM FOR DECLARATORY JUDGMENT

This Defendant, Clinton Machine Co., Inc., as a separate and distinctive defense, and by way of counterclaim in subject matters arising out of the transaction, which is the subject matter of this suit, and which might

be the subjects of suits in equity against the Plaintiff, this Defendant avers:

1.

This Defendant is engaged in the manufacture and sale of internal combustion engines and associated parts thereof, and has been so engaged for several years prior to the beginning of this suit, and has established a nation-wide selling organization, selling through dealers and to manufacturers of original equipment on which this Defendant's product may be used.

2.

That an actual controversy exists between this Defendant and the Plaintiff in that the Plaintiff has charged this Defendant with infringement of certain U.S. Letters Patents alleged to be owned by the Plaintiff and set out in the Complaint therein, to wit:

Patent No. 2,605,753	August 5, 1952
Patent No. 2,693,789	Nov. 9, 1954

* * *

3.

That the products manufactured and sold by this Defendant do not embrace and incorporate or embody the alleged invention of any of the patents of the Plaintiff, or any part thereof, specifically of the above mentioned patents, and therefore do not infringe the same, either per se or in their intended use.

4.

That the aforesaid patents alleged to be owned by the Plaintiff, and each of the said patents hereinabove identified, are invalid in law on many grounds, including the grounds set out in the Answer hereinabove set forth, and including anticipation, and want of patentable invention and particularly in view of the prior patents set out in Exhibit A hereto attached and made a part of the Answer and which is hereby made a part of this counter-claim.

5.

That all of the claims of each of said Letters Patents are invalid and null and void in that they do not properly define an invention because they are too broad functionally at the precise point of asserted novelty, and that each of the claims of each of the said patents is invalid for the reasons set forth in the Answer hereinabove stated, which reasons are incorporated herein and made a part of this counter-claim.

Wherefore, this Defendant prays that this Court enter the Declaratory Judgment, adjudging, determining, and declaring that the alleged patents of the Plaintiff hereinabove identified, and each of them, and each of the claims of each of them, are, and is, invalid, and that the products manufactured and sold by this Defendant, and the use thereof, by the purchaser thereof, does not infringe any of the patent rights of the Plaintiff in any of the patents hereinabove identified and set out in the Complaint, that the Complaint be dismissed, that this Defendant be allowed costs and attorney fees, and

that this Defendant have such further, other, different and general relief as it may be entitled to.

January 6, 1955 THOS. S. DONNELLY
Attorney and Solicitor for the Defendant: Clinton Machine Co., Inc., Clinton, Michigan
3437 Book Building
Detroit 26, Michigan

Of Counsel for Defendant:

January 11, 1955 Kenline, Roedell, Hoffman & Reynolds
Bank and Insurance Building
Dubuque, Iowa

Of Counsel for Defendant:

January 11, 1955 Edward M. Apple
3308 David Stott Bldg.,
Detroit, Michigan

EXHIBIT "A"

United States Letters Patent No.	*Patentee*	*Date issued*
1,242,985	Sawtelle	Oct. 16, 1917
1,447,245	Gore	March 6, 1923
1,463,958	Kettering	Aug. 7, 1923
1,764,147	Burtnett	Aug. 7, 1930
1,921,175	Towler	Aug. 8, 1933
2,060,979	Dienner	Nov. 17, 1936
2,157,666	Jacobi	May 9, 1939
2,170,099	Stubbings	Aug. 22, 1939
2,290,202	Nelson	July 21, 1942
2,334,185	Fisk	Nov. 16, 1943
2,357,942	Farr	Sept. 12, 1944
2,404,833	Forster	July 30, 1946
2,259,079	Leja	July 3, 1951
2,583,466	Brownlee	Jan. 22, 1952
2,590,134	Slonneger	March 25, 1952
2,606,541	Lutz	Aug. 12, 1952
2,627,940	Bakke	Feb. 10, 1953
2,630,881	Bosma	March 10, 1953
2,669,322	Brown	Feb. 16, 1954
1,529,188	Kettering	March 10, 1925
1,683,039	Jack	Sept. 4, 1928
1,685,841	Farmer	Oct. 2, 1928
1,751,443	Cochrane	March 18, 1930
1,947,192	Edwards	Feb. 13, 1934
2,029,216	Barker	Jan. 28, 1936
2,056,755	Welch	Oct. 6, 1936
2,187,265	Carlson	Jan. 16, 1940
2,250,200	Lowther	July 22, 1941
2,305,186	Muenk	Dec. 15, 1942

United States Letters Patent No.	*Patentee*	*Date issued*
2,359,485	Lowther	Oct. 3, 1944
2,361,061	Roos	Oct. 24, 1944
2,607,332	Bosma	Aug. 19, 1952
2,660,987	Doughty	Dec. 1, 1953
1,281,204	Pitts	Oct. 8, 1918
1,611,826	Fischer-Hinnen	Dec. 21, 1926
1,792,089	Hardman	Feb. 10, 1931
1,983,072	Davis	Dec. 4, 1934
2,388,994	Phelon	Nov. 13, 1945

Foreign Patents

Netherlands Patent No. 32,802 — Dated May 15, 1934, To Bilthovenshe.

REPLY TO COUNTERCLAIM

(Filed January 26, 1955)

For its reply to the counterclaim, plaintiff Briggs & Stratton Corporation alleges as follows:

I.

Plaintiff admits that defendant is engaged in the manufacture and sale of internal combustion engines and parts thereof and has been so engaged for several years. Plaintiff is without knowledge as to the nature or scope of defendant's selling organization and leaves defendant to its proofs of the allegations concerning the same.

II.

Plaintiff admits the allegation of paragraph 2 of the counterclaim.

III.

Plaintiff denies each and every allegation of paragraph 3 of the counterclaim and alleges that products manufactured and sold by the defendant infringe each of the patents in suit.

IV.

Plaintiff denies each and every allegation of paragraph 4 of the counterclaim.

V.

Plaintiff denies each and every allegation of paragraph 5 of the counterclaim.

Wherefore, Plaintiff prays that the counterclaim be dismissed and judgment be awarded to the plaintiff in accordance with the prayer of the complaint.

Briggs & Stratton Corporation

By E. Marshall Thomas

609 Bank & Insurance Building
Dubuque, Iowa

Of Counsel:

Ira Milton Jones
110 East Wisconsin Ave.
Milwaukee 2, Wisconsin

January 17, 1955

APPLICATION OF PRIOR ART CITED

(Filed March 4, 1955)

Of the prior art cited, those patents which relate to Patent No. 2,693,789, are as follows:

U.S. No. 1,242,985	Sawtelle	Oct. 16, 1917
U.S. No. 1,447,245	Gore	Mar. 6, 1923
U.S. No. 1,463,958	Kettering	Aug. 7, 1923
U.S. No. 1,764,147	Burtnett	June 17, 1930
U.S. No. 1,921,175	Towler	Aug. 8, 1933
U.S. No. 2,060,979	Dienner	Nov. 17, 1936
U.S. No. 2,157,666	Jacobi	May 9, 1939
U.S. No. 2,170,099	Stubbings	Aug. 22, 1939
U.S. No. 2,290,202	Nelson	July 21, 1942
U.S. No. 2,334,185	Fisk	Nov. 16, 1943
U.S. No. 2,357,942	Farr	Sept. 12, 1944
U.S. No. 2,404,833	Forster	July 30, 1946
U.S. No. 2,559,079	Leja	July 3, 1951
U.S. No. 2,583,466	Brownlee	Jan. 22, 1952
U.S. No. 2,590,134	Slonneger	Mar. 25, 1952
U.S. No. 2,606,541	Lutz	Aug. 12, 1952
U.S. No. 2,627,940	Bakke	Feb. 10, 1953
U.S. No. 2,630,881	Bosma	Mar. 10, 1953
U.S. No. 2,669,322	Brown	Feb. 16, 1954

Foreign Patent:

No. 32,802	Netherlands	May 15, 1934

* * *

Of the prior art cited, the patents which are applicable to Patent No. 2,605,753 are as follows:

U.S. No. 1,281,204	Pitts	Oct. 8, 1918
U.S. No. 1,611,826	Fischer-Hinnen	Dec. 21, 1926
U.S. No. 1,792,089	Hardman	Feb. 10, 1931
U.S. No. 1,983,072	Davis	Dec. 4, 1934
U.S. No. 2,388,994	Phelon	Nov. 13, 1945

Thos. S. Donnelly
Attorney for the Defendant
3437 Book Building
Detroit 26 Michigan

Of Counsel:

Kenline, Roedell, Hoffman & Reynolds
Bank & Insurance Building
Dubuque, Iowa

February 16, 1955

NOTICE OF PRIOR PUBLIC USE AND ADDITIONAL PRIOR ART

(Filed March 4, 1955)

Notice is hereby given by the Defendant in the above entitled case of prior art in addition to that set out in Exhibit "A" of Defendant's Answer which may be used by the Defendant in this case.

The additional prior art applicable to the patent to Lechtenberg, No. 2,693,789, is a follows:

U.S. 1,276,891	Felix	August 27, 1918

The prior art in addition to that set out in Defendant's Exhibit "A" which is applicable to the patent issued to Madle, No. 2,605,753, is as follows:

U.S. 663,643	Simms et al.	Dec. 11, 1900
U.S. 780,221	Packard	Jan. 17, 1905
U.S. 810,963	Motsinger	Jan. 30, 1906
U.S. 816,083	Farwell	Mar. 27, 1906
U.S. 847,876	Apple	Mar. 19, 1907
U.S. 857,715	Brillie	June 25, 1907
U.S. 863,151	Churchill	Aug. 13, 1907
U.S. 1,091,906	Zahringer	Mar. 31, 1914
U.S. 1,224,247	Wacker	May 1, 1917
U.S. 1,261,079	Warren	April 2, 1918
U.S. 1,280,102	Dutreux	Sep. 24, 1918
U.S. 1,401,058	Erickson	Dec. 20, 1921
U.S. 1,427,718	Brown	Aug. 29, 1922
U.S. 1,674,176	Newton	June 19, 1928

PRIOR PUBLICATIONS

The prior publications upon which the Defendant relies and which are referred to in the 7th Defense of Defendant's Answer are catalog sheets and advertising literature circulated to the trade by this Defendant, Clinton Machine Co., Inc.

The prior publications referred to are applicable to Patent 2,693,789 * * * which issued to L. J. Lechtenberg.

PRIOR KNOWLEDGE, USE AND SALE

The prior knowledge, use and sale referred to in the 8th Defense of Defendant's Answer consists of prior knowledge and sale by the following:

The Defendant, Clinton Machine Co., Inc., Clinton, Michigan

Pincore Manufacturing Co., 5841 West Dickens, Chicago, Illinois

Lawson Engine Company, New Holstein, Wisconsin

The Plaintiff, Briggs & Stratton Corporation, Milwaukee, Wisconsin

Cauffiel Motor Industries, Temperance, Michigan

Doehler-Jarvis Corporation, Toledo, Ohio

The prior public knowledge, use and sale referred to relate to Patent No. 2,693,789 * * * .

February 23, 1955

Thos. S. Donnelly,
Attorney for the Defendant
3437 Book Building,
Detroit 26, Michigan

Of Counsel:
Kenline, Roedell, Hoffman & Reynolds
Bank & Insurance Building
Dubuque, Iowa

NOTICE OF PRIOR PUBLIC USE AND SALE

(Filed March 18, 1955)

Notice is hereby given by the Defendant in the above entitled case of prior public use and sale in addition to that heretofore noticed.

The prior knowledge, use and sale referred to in the 8th Defense of Defendant's Answer consists of prior knowledge, use and sale of the structures defined in the three patents in the Complaint, said prior knowledge, use and sale being by the following:

George Rose, Jr.
53 Sand Lake
Onsted, Michigan

Arthur Eaton
R.R. 2
Tecumseh, Michigan

Ned Baldwin
Baldwin Hardware Company
Tecumseh, Michigan

In addition to the prior art heretofore noticed, notice is hereby given of additional prior art to be used by the Defendant against all of the patents in the Complaint, namely:

Van Sickle	615,766	1898

March 15, 1955

Thos. S. Donnelly,
Attorney for the Defendant
3437 Book Building
Detroit 26, Michigan

Of Counsel:

Kenline, Roedell, Hoffman & Reynolds
Bank & Insurance Building
Dubuque, Iowa

NOTICE OF ADDITIONAL PRIOR ART

(Filed April 12, 1955)

Notice is hereby given by the defendant in the above entitled case of prior art in addition to that previously noticed to the plaintiff which may be used by the defendant in this case.

The additional prior art herein referred to is applicable to the patent issued to Madle, No. 260,575, and is as follows:

Sturtevant	740,781	Oct. 6, 1903
Cochran	798,992	Sept. 5, 1905
Callan	809,771	Jan. 9, 1906
Keating	822,525	June 6, 1906
Riker	906,290	Dec. 8, 1908
Heaslet	1,239,689	Sept. 11, 1917
Kettering	1,265,454	May 7, 1918
Smith	1,291,216	Jan. 14, 1919
Kettering	1,430,524	Sept. 26, 1922
Kettering	1,463,958	Aug. 7, 1923
Kettering	1,465,644	Aug. 21, 1923
Smith	1,636,017	July 19, 1927
Littlefield	2,013,541	Sept. 3, 1935
Lefebvre	2,215,106	Sept. 17, 1940
Bosma	2,346,148	April 11, 1944

English Patent No. 310,082 Appln. Date Jan. 20, 1928, Filing Date: Oct. 20, 1928: Acceptance Date April 22, 1929.

The Bosma Patent is applicable to the Lechtenberg Patent No. 2,693,789.

Dated:

THOS. S. DONNELLY
Attorney for Defendant
3437 Book Bldg., Detroit 26 Mich.

Of Counsel:
Kenline, Roedell, Hoffman & Reynolds
Bank & Insurance Bldg.
Dubuque, Iowa

Page of Transcript

TRANSCRIPT OF TRIAL PROCEEDINGS

April 18-22, 1955

HUGH S. BROWN

Direct Examination

My name is Hugh S. Brown, 58 years old, my address is 2020 Two-Tree Lane, Wauwatosa, Wisconsin. I am vice president in charge of engineering of the Briggs & Stratton Corporation at Milwaukee, Wisconsin.

When I came to Briggs & Stratton in 1941 it was as a Director of Engineering. I became Vice President in Charge of Engineering in 1944, and became a director of the company in 1948.

I was on gasoline engines before the first World War, with the French Government, on the Hispano Souiza engines. I was in the Navy functioning on engines — working with engines, during the War. I am a graduate of Pratt Institute in Brooklyn, New York in Mechanical Engineering. I was with the Buda Company for seventeen years, and when I left there I was Chief Engineer of the Railway Division of that Company. And during that time I had to do with gasoline engines as well as railway equipment and other material.

From Buda I went to the Briggs & Stratton Corporation. Briggs & Stratton have been making internal combustion engines since I have been there and, from records I have seen in the Engineering Department, since 1919.

Briggs & Stratton have concentrated on single cylinder four-cycle air-cooled gasoline engines. They were manufacturing vertical cylinder horizontal crankshaft engines in about 1950. Such an engine is engine Exhibit 9. The only difference between that engine and those they were building in 1950 is that the blower housing and gas tank were different. There has been a facelifting job since

1950. The internal parts of the engine are practically identical. The facelifting job is Exhibit No. 9. That facelifting job came on the market I think in 1952. In other words Exhibit No. 9 represents the 1952 version of the Briggs & Stratton Engine. That has a vertical cylinder and horizontal crankshaft.

Briggs & Stratton were manufacturing a horizontal cylinder vertical crankshaft engine at the same time it was manufacturing the engine Exhibit 9 and its predecessor. The engine that they were building is a 6AH Model. That is Exhibit 10. There were two engines that preceded the engine in Exhibit 10. One of them had a cast iron base instead of the die cast base shown in Exhibit 10. And the other engine had a circular base that was practically under the cylinder and crankshaft of the other—on the 6HF engine. Engines like Exhibit 10 were used for the most part on rotary lawn mowers. Its weight is approximately thirty-six pounds.

44 The engine which has been marked Plaintiff's Exhibit 12 is Briggs & Stratton Model 6BH Engine. The 6BH, Exhibit 12, has succeeded the 6AH, Exhibit 10.

There was a great deal of work done to develop the 6BH Engine, Exhibit 12.

The engine which was used on the preliminary tests was as shown in the upper left panel of Chart No. 5, Exhibit No. 8. This engine is a cast iron engine and was known as a Briggs & Stratton Model N. There was also an engine that had a different mounting, that was called an NP. And in many of these tests either an N
45 or NP engine were used. The only difference between the two, one had a four-hole bottom mounting and the

CHART NO. 5

SOME OF PRELIMINARY TESTING STEPS REFERRED TO IN BROWN AFFIDAVIT SUPPORTING PETITION TO MAKE SPECIAL

MODEL "N" TYPE ENGINE USED FOR TESTS

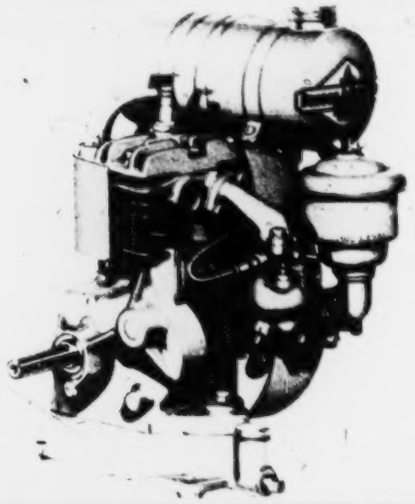

FIRST TEST ENGINE – AUG. 4, 1950

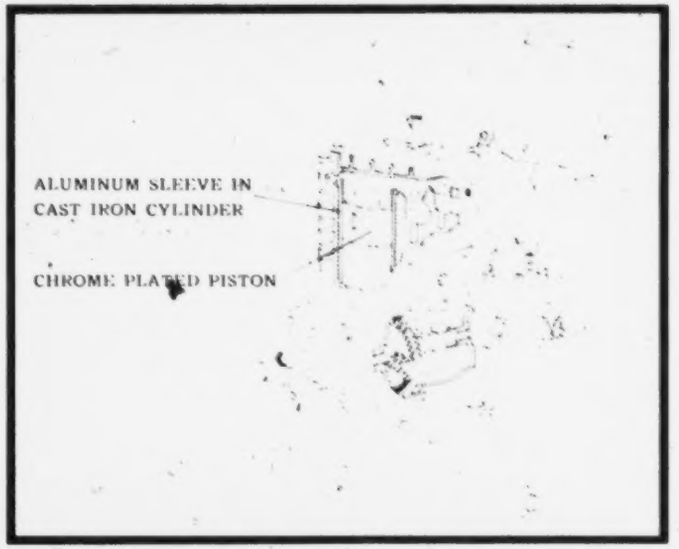

SECOND TEST ENGINE – SEPT. 19, 1950

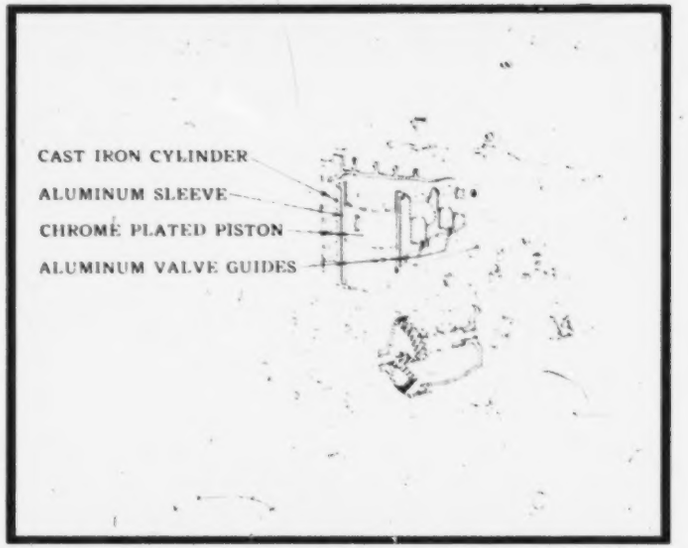

FOURTH TEST ENGINE – OCT. 23, 1950

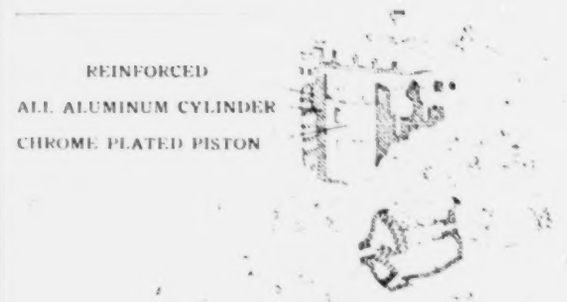

FIFTH TEST ENGINE – NOV. 30, 1950

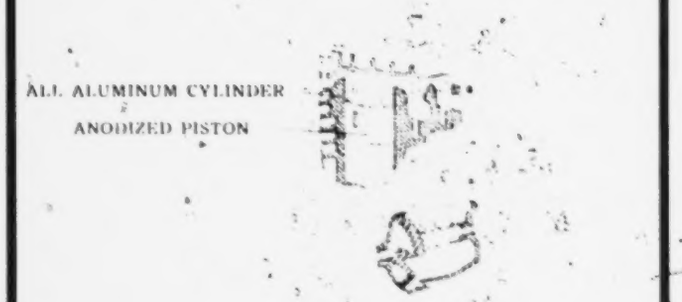

TWELFTH TEST ENGINE – DEC. 10, 1951

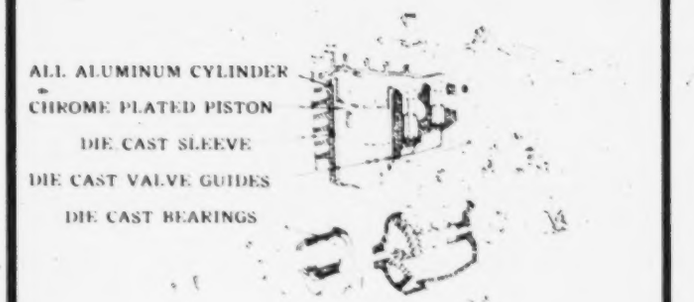

IRA MILTON JONES

Page of Transcript

other a plain bearing. In the upper center panel, described as the first test engine which was assembled and started on test on August 4, 1950. This engine was made up from an engine shown in the upper left panel. This engine had an aluminum sleeve in a cast iron cylinder and used an aluminum piston that was chrome plated. The second test engine, which was assembled on September 19, 1950, is shown in the upper right panel. This engine is also—Exhibit 11. That is the engine with the parts removed so that you can see the changes that were made in it. This engine had an aluminum sleeve and chrome plated aluminum piston and also had aluminum valve guides. Shown in the upper right hand corner of the chart, Plaintiff's Exhibit No. 8.

The fourth test engine is shown in the lower left panel of Chart No. 5 and this engine is made entirely of aluminum. This engine was made from the sand cast molds
46 that were used to make the cast iron engine, only aluminum was poured in the mold rather than cast iron; and that was done in the Briggs & Stratton plant. This engine has an all aluminum cylinder and a chrome plated piston. The piston was made of aluminum. The fifth test engine is shown in the lower middle panel. It also has an all aluminum cylinder but uses an anodized aluminum piston.

The Court: What is that anodized?

A. That is a treatment of the aluminum, Your Honor, a hardening of the surface. It is aluminum and an oxide.

The twelfth test engine is shown in the lower right hand panel; and it was assembled on December 10, 1951. This engine had an all aluminum cylinder and chrome plated aluminum piston, but was equipped with

Page of Transcript

a die cast aluminum sleeve, die cast valve guides and die cast main bearings. Now, the reason why the twelfth test engine was so equipped—we wanted to be sure that the action of die cast aluminum parts would be the same as the sand cast aluminum parts previously used. Even
47 though they were of the same analysis we might have found a difference in the structure, and the twelfth test engine was run to prove these points. Now, all of the engines shown on the chart, Exhibit No. 8, Chart No. 5, with the exception of the fifth test engine performed very well, and indicated that we could make an aluminum die cast engine with no liner in the engine, and it would operate with a chrome plated aluminum piston. The anodized piston did not perform.

Prior to the twelfth test there had been many tests of a general kind. The chart shows the general progress. But there were—might have been several engines of the same make up tested so that we would be sure. But prior to the test starting of the twelfth test engine, layout and other work was done in engineering on the design of the engine known as the 6BH, Exhibit 12, I believe.

The—well, after the twelfth test we knew for sure that we could have an engine that would operate with die cast material. And that test was started on December
48 10, 1951. Back before that test was started the layout of the engine shown in the Lechtenberg Patents had been started. And the layout of that engine was completed on December 5, 1951. Briggs & Stratton does not keep accurate records of all of the jobs in the Engineering Department. But from my best estimate a conservative figure for the cost to Briggs & Stratton of the experimental work that I have been referring to, up to about August 9, 1950, would be $110,000.00.

Page of Transcript

49 After the layout of the engine and the detailed drawings had been made, which I have described before, sand cast engines to these drawings were made, and they were given additional tests in many different fields.

Briggs & Stratton make two engines that incorporate the disclosure of the Lechtenberg patents that are at the present time in production and those two engines are the 6BH as Exhibit 12, and a suction feed model of the
50 same type of engine, which is called the 6LH, suction feed type.

51 These same production drawings were used for the sand castings as were later used for the die castings; and that is always our usual practice. The engines produced from those drawings is the engine illustrated in the drawing of the two Lechtenberg Patents in suit. The Briggs & Stratton Engine, Plaintiff's Exhibit 12, includes the findings of the—shown on the chart, Exhibit 8, with the
52 exception of the fifth test engine, which was not considered. Of course, that was not included.

The present engine embodying the disclosures of the drawings of the Lechtenberg Patent was first introduced to the trade as the BH Engine similar to that shown in Exhibit 12 only made in sand castings. These were first shipped as pre-production samples on January 13, 1952 —on January 17, 1953, I beg your pardon.

I checked the invoices. I believe these first engines, these sand cast engines, were called 6BH to distinguish them from the pre-production samples—they were pre-production samples. They were sent out to our customers so they would have an opportunity to try out the engine on their equipment to see if it performed satisfactorily on their particular equipment.

Page of Transcript

53 The reception these first sand cast engines comparable to Plaintiff's Exhibit 12 engines received in the trade, I would say, was a most enthusiastic one. I personally checked on the trade reaction. It is a most important part of my work to keep abreast with the trade reception of the various Briggs & Stratton engines. And that requires that I go out into the field.

The same drawings were used for the sand castings as were used with die cast engines. The reasons for making
54 the sand cast engines is that it is our normal procedure to use drawings of the die castings and have sand cast castings made in order to check and test before the die cast molds are made. The die cast molds are so very expensive that a slight mistake can be most costly, and we find it—very profitable, let us say, to make them up in sand castings before we made them out of the solid metal. I would say about a thousand pre-production samples of the sand cast model were made and sent out. I mean, the engine the same as Exhibit 12, only in a sand casting.

If a third party wanted to make a similar engine it would be most advantageous to have a Briggs & Stratton die cast engine before him because there are many things to see on a die casting, how the mold is prepared, how it is gaged, and all of that, it would be most advantageous. It would effect a material saving to the persons copying to follow a Briggs & Stratton die cast engine. For
55 instance, I might illustrate that by the fact before we built the steel mold for the engine shown in Exhibit 12, the cylinder for it rather, we made a wooden copy in mahogany so we would get it correctly, and checked it over very carefully before we made it out of steel.

Page of Transcript

The die cast mold for the cylinder of the Model 6BH Engine shown in Exhibit 12 would cost approximately $30,000.00 apiece, and as I know it now, we would have over ten of those molds in addition, to make supporting parts. I think the best way to illustrate the complexity of the mold to make the cylinder is to say there are over 150 detailed drawings on the mold to make the cylinder.

---

56 KENNETH C. AGAR

Direct Examination (Adverse)

57 Kenneth C. Agar, 1057 Martin Place, Ann Arbor, Michigan. Chief Engineer of the Defendant in this
58 action, Clinton Machine Company, Incorporated. I was made Chief Engineer of the Clinton Machine Company, Incorporated on June 4, 1945. I first entered the employ of the Clinton Machine Company practically on June 4, 1945.

* * *

64 Examining the April, 1954, Clinton General Specifications, Plaintiff's Exhibit No. 14, I cannot state whether the two pictures at the top thereof are true representations—reproductions of the Clinton Series VS100 four-cycle engine as it existed April, 1954 because this is an artist's reproduction of the photograph we took. I did not take these pictures myself. I presume they were made from pictures of a Clinton engine. I don't know for certain.

65 Explaining the situation with reference to the making of those cuts, as best I know, we made sample engines of those same engines. We don't make expensive gas tanks, but we build them up on top of those engines. It would be far too much expense to make tanks of that

description in sheet metal, we made them in clay. They were placed upon those engine crankcases and photographs taken.

The illustrations appearing at the top of Plaintiff's Exhibit 14 were made from photographs of an engine having a clay built-up tank structure. The lower structure was made up of either sample parts or wood parts;
66 I believe they were sample parts. Those sample parts were made at Clinton, Michigan, or we had them made at tool shops around Michigan. I supervised their making.

The engines illustrated at the top of Plaintiff's Exhibit 14 are illustrations of engines that were made up under my supervision. That same is true of the illustrations appearing at the top of Plaintiff's Exhibit No. 14c. I couldn't give you the exact dates when we made up the engine that is reproduced at the top of Plaintiff's Exhibit 14 and 14c. I don't remember them. It would be
67 some time prior to the date of Exhibit 14. And also, of course, prior to the date appearing on 14c.

Q. Now, I am showing you a blown up photostat, which is marked Plaintiff's Exhibit 14d, and when I tell you that is a photostat, I personally had made of the cuts appearing at the top of Plaintiff's Exhibit 14, you agree with me, do you not?

A. Yes.

Q. Examine it carefully, because I don't want there to be any mistake?

A. I would say yes.

We haven't kept records of when the first engine Series VS100 four-cycle engine, corresponding to that reproduced at the top of the Clinton General Specifications, Plaintiff's Exhibit No. 14 and 14c, and of which Plain-

VS-100

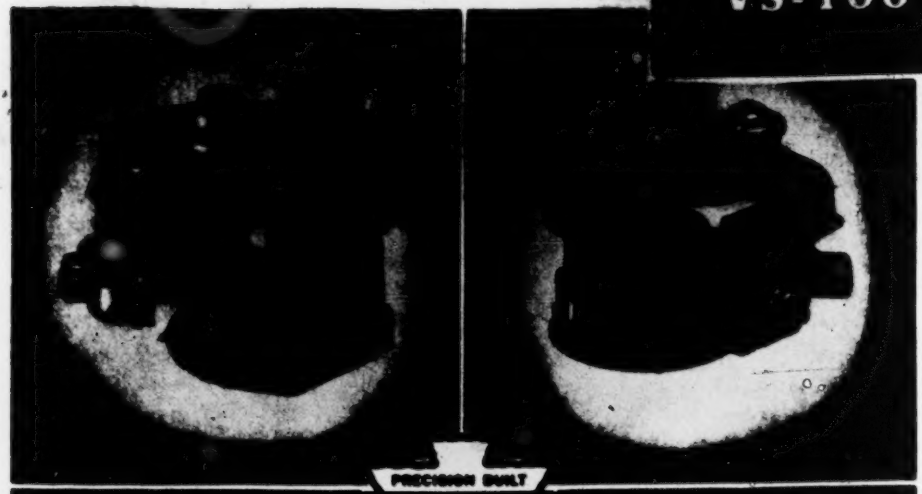

PRECISION BUILT CLINTON ENGINE

For complete power curve and dimensional specifications, SEE REVERSE SIDE

	HP	RPM
VS-100	1.45	2200
	2.0	2800
	2.5	3600

GENERAL SPECIFICATIONS

Model	Type	Description	Starter	Weight
VS-100				

BORE
STROKE
TYPE
AIR COOLED
PISTON DISPLACEMENT
IGNITION
SPARK PLUG
LUBRICATION

CARBURETOR
GOVERNOR
MAIN BEARINGS
CRANKSHAFT
CONNECTING ROD
PISTON
PISTON RINGS
VALVES
VALVE SEATS
VALVE TAPPETS

CYLINDER AND CRANKCASE
CYLINDER HEAD
OIL FILLER
AIR CLEANER
FUEL TANK
OIL RESERVOIR
DIRECTION OF ROTATION
FINISH

STANDARD EQUIPMENT

Standard equipment on [illegible]

SPECIAL EQUIPMENT

MANUFACTURED IN A WIDE RANGE OF 2 CYCLE AND 4 CYCLE MODELS

CLINTON ENGINES PROVIDE POWER

FOR FARM • HOME • INDUSTRIAL EQUIPMENT

FORM 5877 PRINTED IN U.S.A. ISSUED APRIL 1938

[redacted]

Detailed prints and engineering counsel are available. Specifications and Dimensions are subject to change without notice.

14

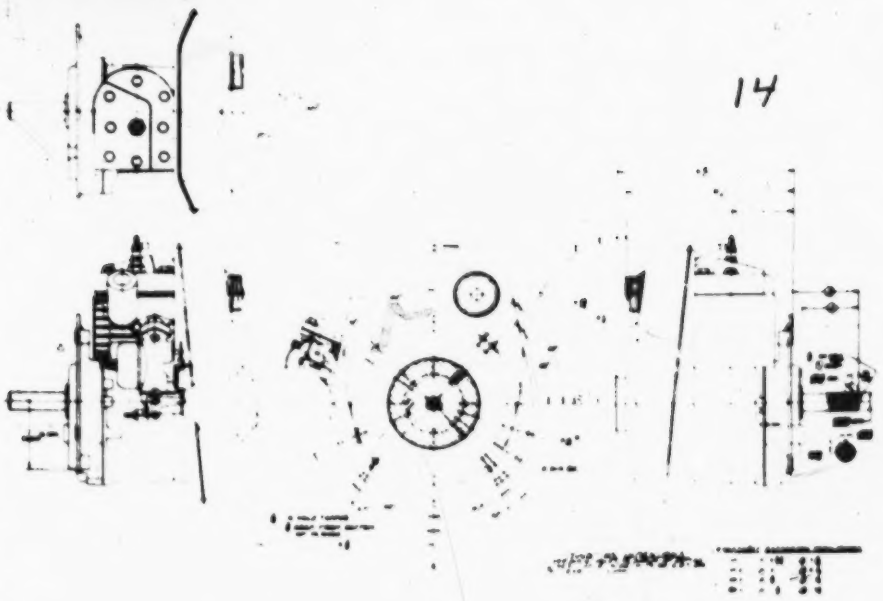

POWER DATA

The performance and power analysis figures for the Clinton Engine series show the rated Brake Horse Power developed from test-run engines. The standard engine equipped with standard air cleaner and muffler was used, in every case, for these tests and the figures have been corrected for barometer at sea level and temperature of 60° F. Production engines when shipped will develop not less than 85% of rated B.H.P.

Production engines, after run-in to reduce friction will develop not less than 95% of the rated B.H.P.

Engine power will decrease 3% for each 1,000 feet above sea level, and 1% for each 10° F. above standard temperature of 60° F.

Unless otherwise specified, governors are set to operate at 3,600 R.P.M. without load. Complete details of installations requiring continuous operation at other than recommended speeds should be referred to the factory for approval.

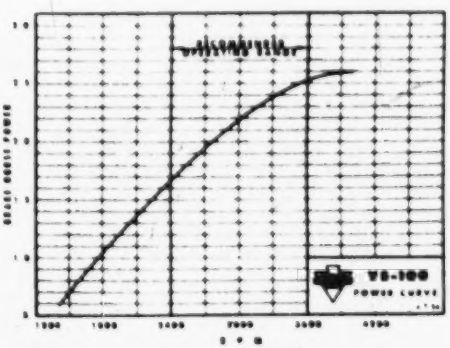

CABLE ADDRESS: ENGINES U. S. A.

ENGINE DIVISION OF **CLINTON MACHINE CO.**

MAQUOKETA, IOWA

103 PRINTED IN U. S. A.

ON LETTERHEAD OF
CLINTON MACHINE CO.

April 23, 1954

Announcement

Here's the specification sheet you have been waiting for on the CLINTON LIGHT-WEIGHT 4-CYCLE VERTICAL SHAFT ENGINES.

We believe when you go over this specification sheet carefully, it will once again show why Clinton is and has been the leader with vertical shaft engines in the rotary power mower field.

Particularly note the crankcase and cylinder, because it does have the design most people have been talking about and asking for. Also note the H.P. and the overall mounting dimensions (it is interchangeable).

If we can be of service to you, please feel free to call on us.

Yours very truly,

CLINTON MACHINE COMPANY

Clete Erlacher

Sales Manager

CE:bkh

Enclosure

VS-100

DIMENSIONAL SPECIFICATIONS AND POWER DATA

Detailed prints and engineering counsel are available. Specifications and Dimensions are subject to change without notice.

BRIGGS & STRATTON CORPORATION
Plaintiff
v.
CLINTON MACHINE CO., INC.
Defendant

PLAINTIFF'S EXHIBIT NO 14 C

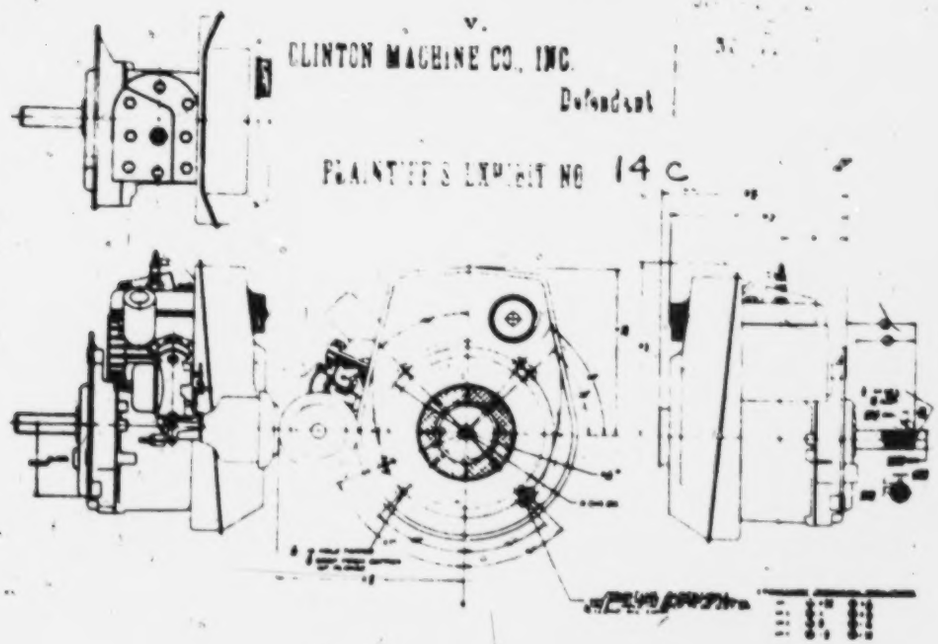

POWER DATA

The performance and power analysis figures for the Clinton Engine series show the rated Brake Horse Power developed from test-run engines. The standard engine equipped with standard air cleaner and muffler was used, in every case, for these tests and the figures have been corrected for barometer at sea level and temperature of 60° F. Production engines when shipped will develop not less than 85% of rated B.H.P.

Production engines, after run-in to reduce friction will develop not less than 95% of the rated B.H.P.

Engine power will decrease 3% for each 1,000 feet above sea level, and 1% for each 10° F. above standard temperature of 60° F.

Unless otherwise specified, governors are set to operate at 3,000 R.P.M. without load. Complete details of installations requiring continuous operation at other than recommended speeds should be referred to the factory for approval.

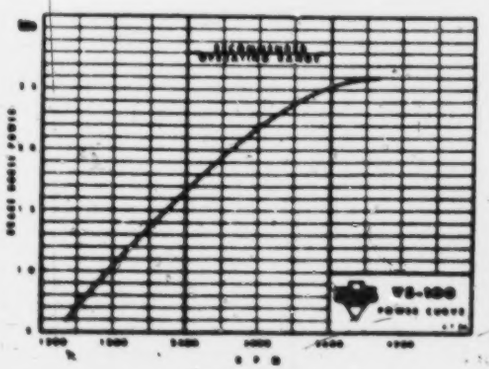

CABLE ADDRESS: ENGINES U.S.A.

ENGINE DIVISION OF CLINTON MACHINE CO.
MAQUOKETA, IOWA

PRINTED IN U.S.A.

VS-100

CLINTON

For complete power curve and dimensional specifications, SEE REVERSE SIDE.

	HP	R.P.M.
VS-100	1.45	2200
	2.0	2600
	2.5	3600

GENERAL SPECIFICATIONS

Model	Type	Description	Starter	Weight
VS-100	4-Cycle Air Cooled	Vertical Shaft	Rope or Recoil	19

BORE: 2½
STROKE: 1½
TYPE: 4 cycle single cylinder L-Head air-cooled
AIR-COOLED: Large capacity curved vane blower cast integral with flywheel. Air passes through deep fins to maintain correct operating temperature
PISTON DISPLACEMENT: 7.2 cubic inches
IGNITION: Very high voltage built-in flywheel magneto for faster starting. Moisture and dust proof with fully enclosed ignition points
SPARE PLUG: 14 m m
LUBRICATION: Splash system

CARBURETOR: Full float feed with idle and high speed adjustment
GOVERNOR: Adjustable air velocity type
MAIN BEARINGS: Aluminum alloy
CRANKSHAFT: Arma steel induction heat treated. Counterweights and cam gear drive integral with shaft
CONNECTING ROD: I Beam aluminum alloy with extra large bearings
PISTON: Aluminum alloy Clinton engineered for efficient combustion
PISTON RINGS: Two compression and one oil control. Treated surfaces
VALVES: Forged steel. Exhaust valve provided with heat resistant alloy head
VALVE SEATS: Alloy inserts
VALVE TAPPETS: Hardened and ground

CYLINDER AND CRANKCASE: Die cast cylinder block and crankcase with large amount of cooling area for cool operation. A close-grained cast iron liner is die cast in block
CYLINDER HEAD: Aluminum removable with extra deep cooling fins
OIL FILLER: Conveniently located for easy check of oil level and for filling
AIR CLEANER: Visible oil bath type
FUEL TANK: 1½ quart capacity with gasoline strainer and shut-off
OIL RESERVOIR: One pint capacity
DIRECTION OF ROTATION: Counter clockwise viewed from power take-off shaft side
FINISH: Heat resistant dark green enamel. Other colors available upon request

BRIGGS & STRATTON CORPORATION

STANDARD EQUIPMENT

Standard equipment includes: Downdraft oil bath air cleaner dust and moisture-proof, high voltage [illegible] magneto, float feed carburetor and fuel tank, muffler, blower [illegible] crankshaft machined to accommodate clutch and [illegible] scarcely rope starter.

SPECIAL EQUIPMENT

Special equipment includes: Remote governor controls any length throttle cables and stop ignition shielding other crankshaft extensions fungus proofing kerosene conversion recoil starter

CLINTON MACHINE CO. INC.

No. 711

MANUFACTURED IN A WIDE RANGE OF 2-CYCLE AND 4-CYCLE MODELS

CLINTON ENGINES PROVIDE POWER

FOR FARM · HOME · INDUSTRIAL EQUIPMENT

PRINTED IN U.S.A. Filed April 22, 1955

PLAINTIFF'S EXHIBIT NO 14C

Get Free Engine Check-up! Lee McNeely, Clerk

★ CARBURETOR ★ COMPRESSION ★ IGNITION ★

at any Clinton Service Station as listed in your Authorized Clinton Service Directory or consult the Classified Section

PLAINTIFF'S EXHIBIT 14d

VS-100

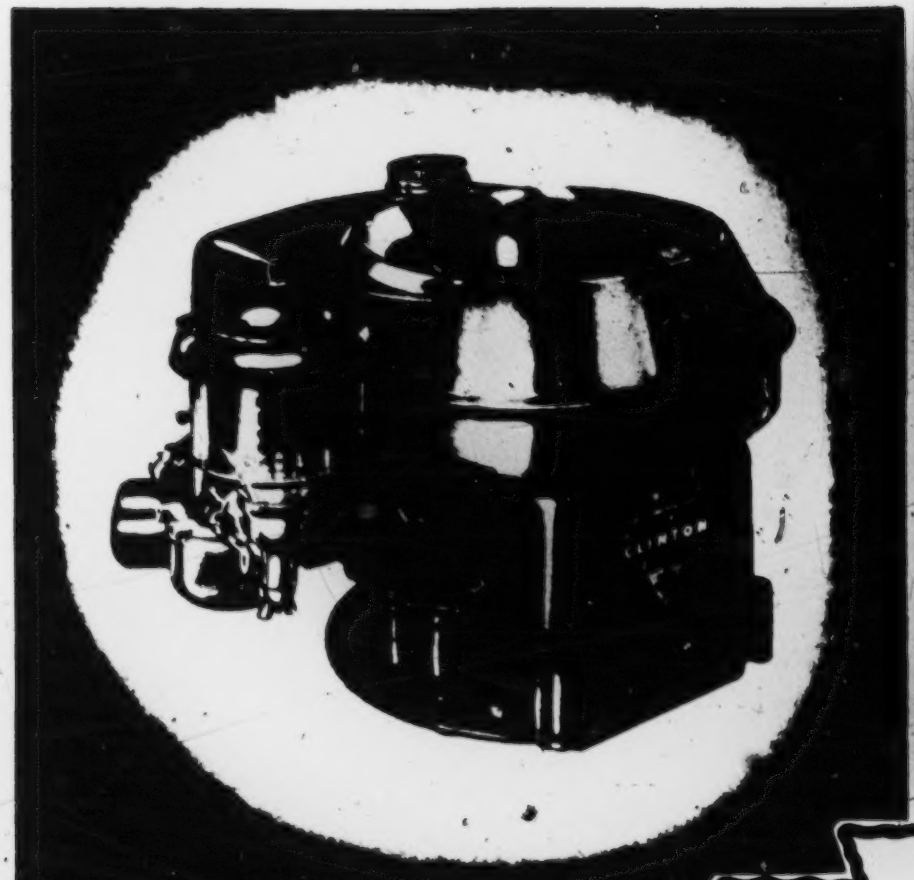

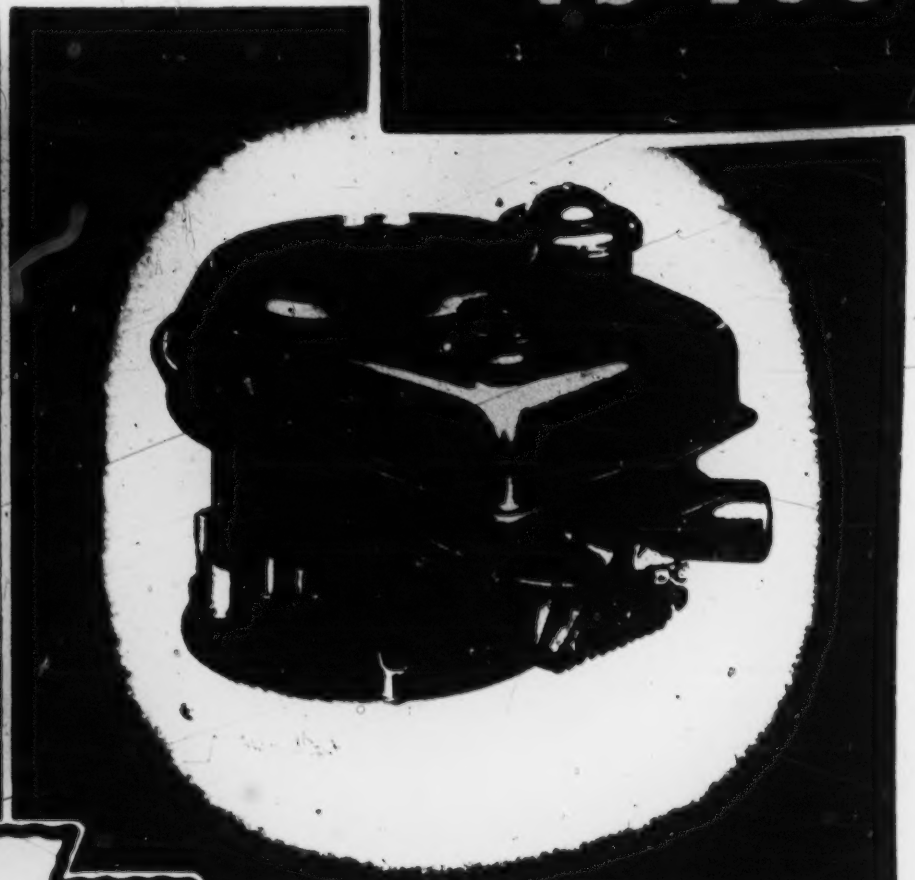

PRECISION BUILT

A Wide Range of Models are Made By **CLINTON** For Farm, Home and Industrial Use

ENGINE
CLINTON MACHINE CO

For complete power curve and dimensional specifications, SEE REVERSE SIDE.

	H.P.	R.P.M.
VS-100	1.45	2200
	2.0	2800
	2.5	3600

GENERAL SPECIFICATIONS

Model	Type	Description	Starter	Weight

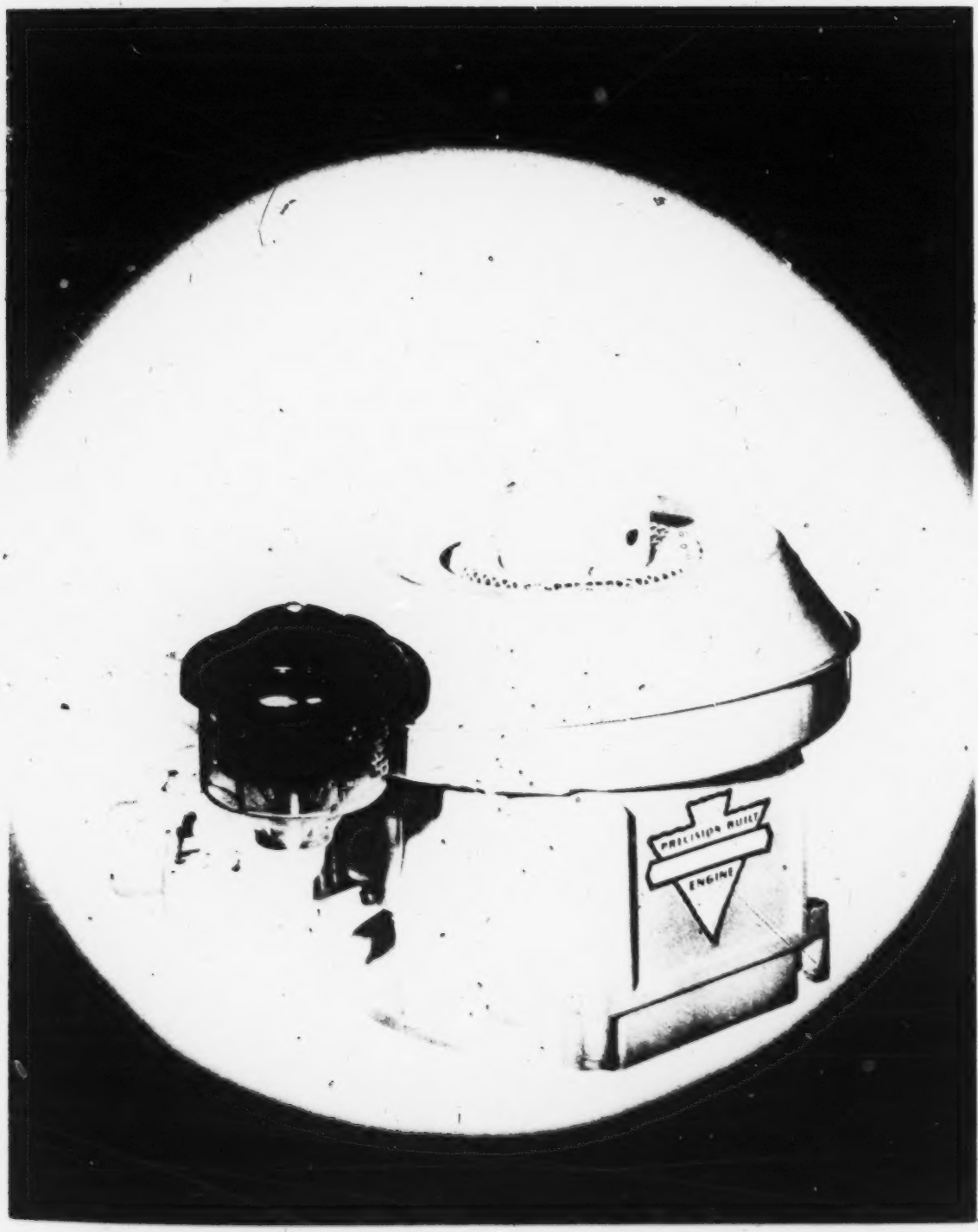
PRECISION BUILT
ENGINE

PLAINTIFF'S EXHIBIT 14f

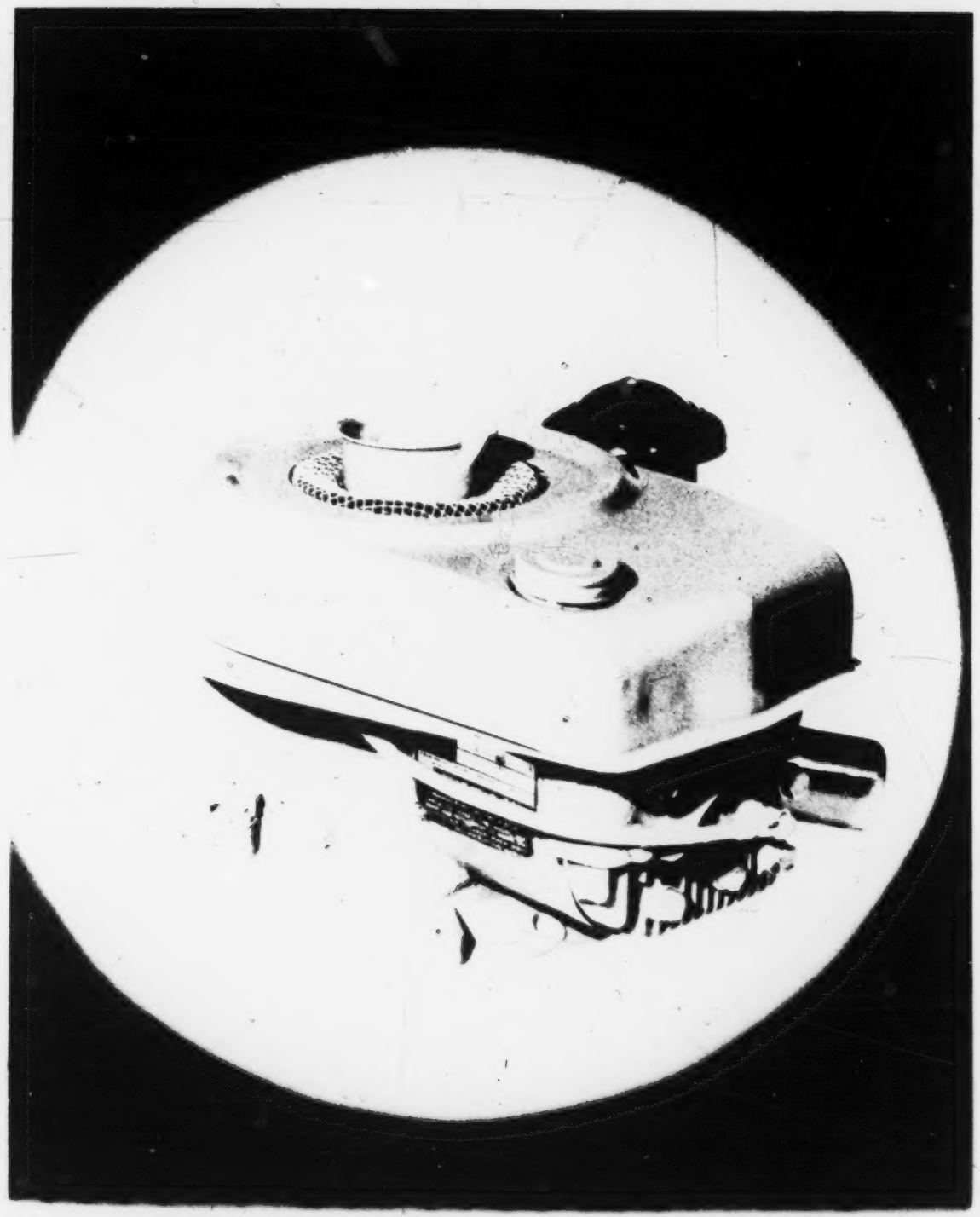

Page of Transcript

tiff's Exhibit 14d is a blow up, was completed. We didn't
68 figure we would use them again, have any need for them. My judgment was around the latter part of May, 1945—or '54, excuse me. It is my belief that prior to August 24, 1954 we had built all of the—oh, 45 of the 50 samples we started by that time. Now, I would have to consult the records to be sure of that. All of this work was done under my supervision and under my control. The engine illustrated at the top there was made under my direct supervision and control. The illustration at the top of General specifications, Plaintiff's Exhibit 14c are illustrations from the same engine appearing at the top of Plaintiff's Exhibit 14.

69 Referring to the photostatic blow-up, Exhibit 14b, which we agree is the same as the illustration on Exhibit 14 and 14c, this photograph marked Plaintiff's Exhibit 14e, is the photograph appearing on the left side of 14d.

The photograph marked 14f is a picture of the engine appearing on the right side of Exhibit 14b.

I wouldn't be sure about where the specific engine is that is reproduced at the top of Clinton General Specifications, 14 and 14c of which the photostat 14d is a blow-up. Parts of it may be around our office or may be scrapped.

70 The accused Clinton engine, the engine in question, is Clinton's best-selling engine.

HUGH S. BROWN (RECALLED)

Direct Examination

71 I can identify these two pictures 14f and 14e. These pictures were taken under my supervision. They show a Briggs & Stratton base and cylinder and crankcase with

Page of Transcript

a Clinton gas tank and other exterior parts. The basic engine is a Briggs & Stratton engine. The engine marked Exhibit No. 4 is the engine of which these photographs 14e and 14f were made from.

The engine in Exhibit 4 was made from a basic Briggs & Stratton engine but a VS100 Clinton Gas Tank and rope starter, pulley and screen and the cylinder shield was put on the regular Briggs & Stratton cylinder. Also, the Clinton breather-cover, air-cleaner and carburetor and intake elbow were used. To change over the Briggs & Stratton cylinder, the outer baffle was cut out.

Exhibit No. 16a of Exhibit 16, to make the cylinder shown on engine in Exhibit 4, this — the flange at the
72 upper left-hand part of the cylinder was removed, just cut off. By cutting off that flange, it would not affect or influence the operation of the engine if another cover with a substitute was taken. That was the only change made in the Briggs & Stratton cylinder to place it on this engine, Exhibit 4. The Clinton name plate appearing on Plaintiff's Exhibit 4 was photographed off of a Clinton engine — from a Clinton engine. And put on to show how the pictures were made in specifications sheet dated in April '54.

73 I am taking this duplicate of Plaintiff's Exhibit 14d which is the blow up of the Clinton illustration which Mr. Agar testified was the Clinton engine, and indicating on that copy, using a red pencil, those peculiar points of likeness between the Briggs & Stratton engine and this alleged Clinton engine, using numbers, but describing the part that I apply the number to.

74 No. 1. There are two ribs at the bottom of the crankcase and cylinder which Briggs & Stratton used for their

PLAINTIFF'S EXHIBIT 148

SERIES

VS-100

4 CYCLE

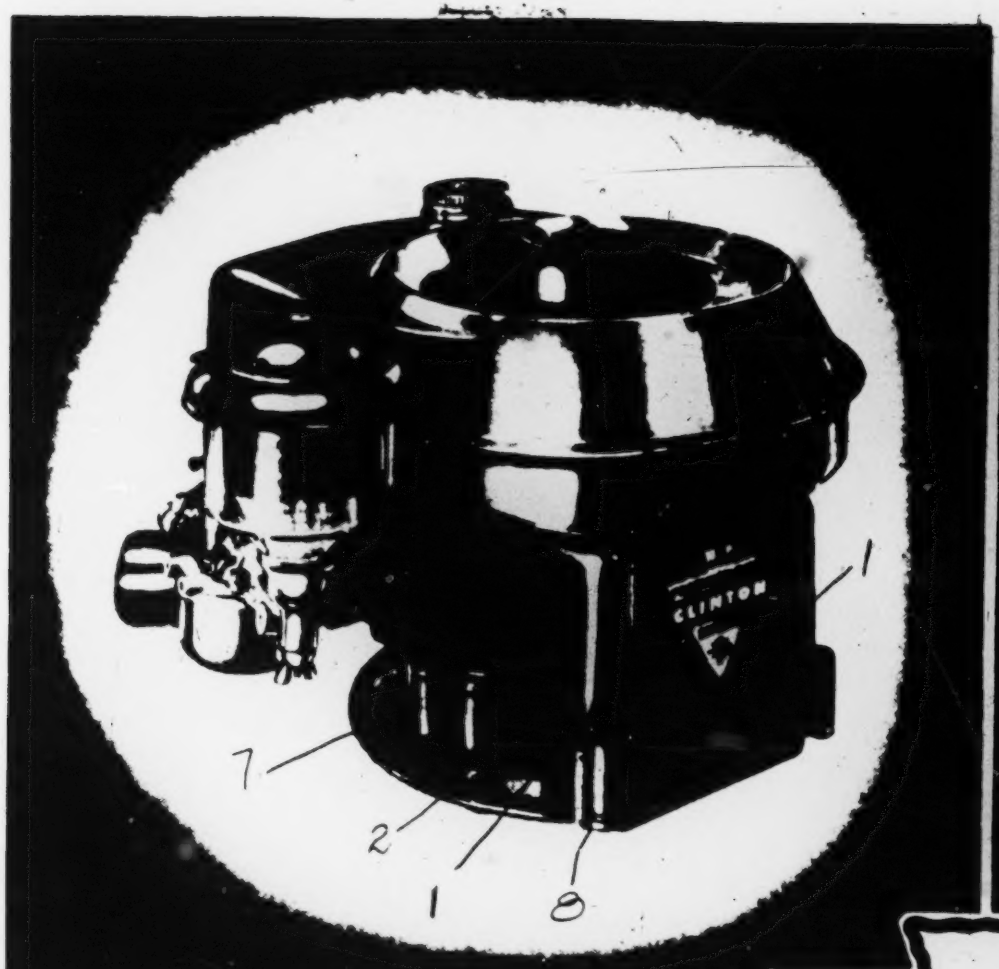

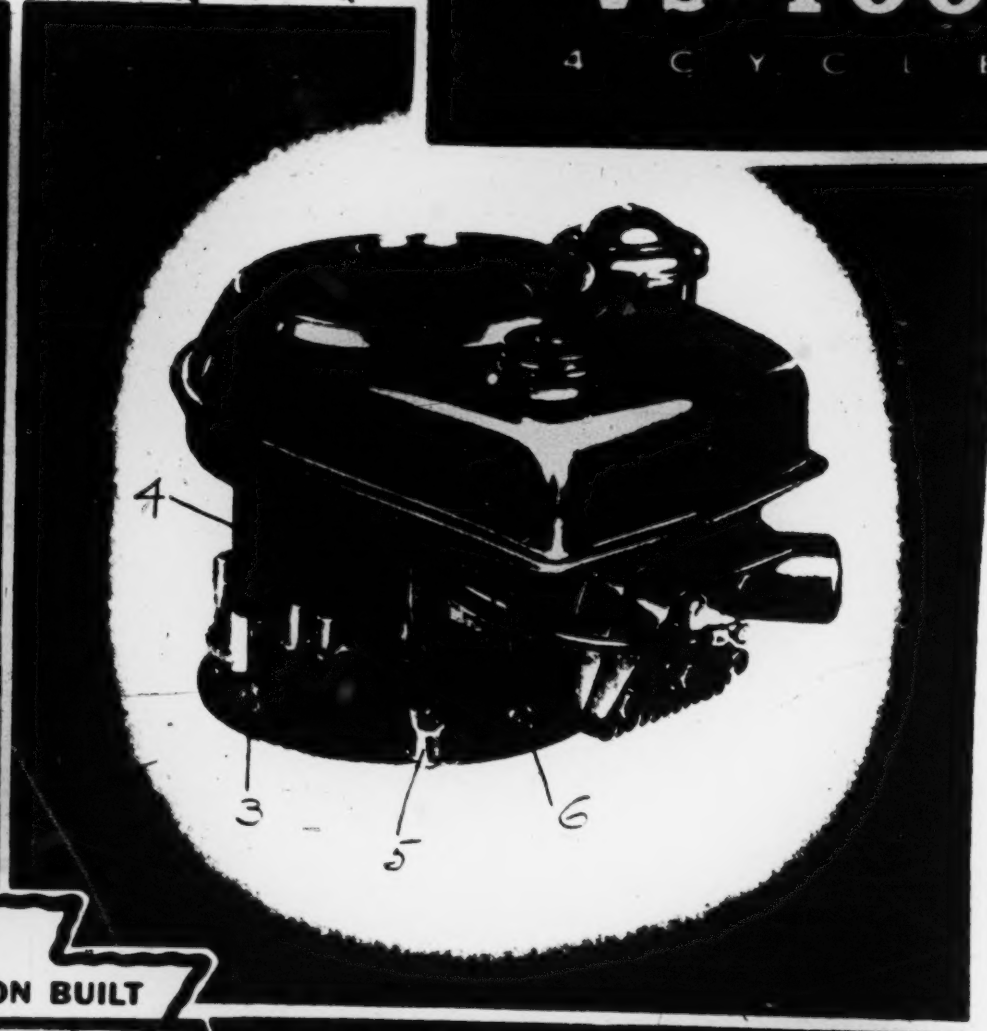

PRECISION BUILT

A Wide Range of Models are Made By **CLINTON ENGINE** For Farm, Home and Industrial Use.

CLINTON MACHINE CO

For complete power curve and dimensional specifications, SEE REVERSE SIDE.

	H.P.	R.P.M.
VS-100	1.45	2200
	2.0	2800
	2.5	3600

GENERAL SPECIFICATIONS

Page of Transcript

method of production. That is peculiar to the Briggs & Stratton engine. No. 2, the boss in the picture shown at the left-hand, the boss practically in the center of the crankcase, is peculiar to the Briggs & Stratton engine. The oil filler plug in the right view is peculiar to the Briggs & Stratton engine and is marked No. 3. There is a heavy projection on the cylinder at approximately the center of the view of the crankcase that is peculiar to the Briggs & Stratton engine and was used to facilitate die casting. I mark that No. 4. The mounting boss, which I will mark No. 5, is peculiar to the Briggs & Stratton engine as it has a single hole and a single rib tying back into the main section of the mounting casting. The hole in the mounting casting, which I will mark No. 6, is in a location so that a screw driver can be used to put in the cylinder baffle screw, and this position is peculiar to the Briggs & Stratton engine. Also, the conformation of the casting, which I will mark No. 7, is peculiar to the Briggs & Stratton engine as this casting is cut out in order to
75 clear the cam gear. Also, a round hole marked No. 8 for the mounting screw for holding the crank case or sump to the cylinder at the middle of the left-hand view, is peculiar to the Briggs & Stratton engine.

I am sure that the castings shown in Exhibit 14d are Briggs & Stratton crankcase and cylinder castings and the cover or sump casting, Briggs & Stratton and not a Clinton.

The basic engine illustrated in Plaintiff's Exhibit 14d is the Briggs & Stratton engine with which we are here involved. The exhibit No. 4 would illustrate that.

* * *

Page of Transcript

77 The part to which I gave the numeral 2 is the mounting boss on the left-hand side of the engine facing the spark plug, or facing toward the spark plug.

The four castings in Exhibit 16, casting 16a is the crankcase and cylinder of the Briggs & Stratton 6BHS engine. Exhibit 16b is the base or sump of the Briggs & Stratton engine. The casting Exhibit 16c is the crankcase and cylinder casting of the Clinton engine, and the casting 16d is the cover or sump base of the Clinton engine.

78 The advantages possessed by an engine embodying the disclosure of the drawings of the Lechtenberg Patents are very many as compared to previously known engines of the same type. Both from manufacturing, because of the light weight and many other things. I think I could best illustrate what the advantages are if I could use Exhibit 15.

79 The crankcase cover casting, Exhibit 15a, is for an engine having a plain bearing and with a hand lever starter. The hand lever starter is held in a pocket or hole that is made in the casting. This lever or its hole is also used by many of our customers for mounting an idler pulley for a belt drive. It may be used for a clutch lever, it may be used for mounting a belt guard. We have many engines going out this way. The crankcase cover in Exhibit 15b, is for an engine that would be provided with a gear reduction so that the power take-off would run at a slower speed than the crankshaft. Usually it is six to one. This part, up here, the gear reduction housing can be bolted to this cover in any one of four positions, twelve o'clock, three o'clock, six o'clock, and nine o'clock. These engines are used for the most part

Page of Transcript

by garden tractors and other equipment of that type. The Exhibit 15c, shows a crankcase cover that is suitable for an engine using a belt drive. It has a plain bearing and is used possibly on lawn mowers and light equipment. The crankcase cover in 15d, is equipped— is used on an engine requiring a ball bearing on the output—
80 the outer end of the crankshaft, and is also provided with four mounting holes that can be used to mount water pumps, electrical generators, and similar equipment, where the pump or armature are mounted on the crankshaft of the engine, therefore, a ball bearing is needed to hold it to very close limits. The crankcase cover or sump in 15e is for an engine having a vertical crankshaft and a horizontal cylinder, and this cover would be used on a regular rotary mower such as would not be self-propelling. The plate would be strictly on the crankshaft pulley here. The cover plate on 15f is also for a vertical crankshaft engine, for a horizontal cylinder, but has an additional power take-off from the cam shaft, which runs at half of the speed of the crankshaft. And it is used for the—to supply the driving power for self-propelled rotary mowers. There are many other covers—or other covers—like these, such as those that would be used for mounting pumps, that is, that would be used for mounting an outside pump. Also, on the inside some of them are provided with mechanical governors. Most of the engines have governors which are in the blower housing of the engine, but on generators and such equipment where regulation must be close we can supply mechanical gov-
81 ernors—mechanical governors. So also the engines can be equipped with fillers at either side so where they are mounted on equipment they can fill them without getting in the way of other parts. So there are many combinations that can be used on the cylinder, 16a, to get various

types of engines, simply by substituting these various cover plates. There are thirty-six combinations that can be made on the vertical engine. On the present engines that we have, the cast iron engine, we changed the cylinder for all of these particular wants, and also for fuel pumps and mechanical governors, so that the number of patterns and cylinders that must be carried in stock are very numerous; and that is one of the great advantages of this Lechtenberg engine.

There are also some—many other advantages. For instance the price of the engine that was made—vertical crankshaft engine with horizontal cylinder, that was made prior to the Lechtenberg engine, which is our 6AH, in Plaintiff's Exhibit 10, sold to the manufacturer for $30.45. The engine shown in Exhibit 12, which embodies the Lechtenberg Patent, sells for $21.25. So there is a reduction of $6.20 between the two engines. And the engine in the Lechtenberg Patent delivers more horsepower than the one—the 6AH in the Exhibit 10. Also, the weight of the engine in Exhibit 10 is 36 pounds. The weight of the engine in Exhibit 12 is 19½ pounds, which is a tremendous advantage to a rotary mower that has to be pushed by hand. Also, there are pumps and generators and all kinds of portable equipment that it is a tremendous advantage in light weight.

In making the changes I have identified, or possibilities I call them, the cylinder does not have to be changed, although we do have two. The vertical engine, or the engine in which the cylinder is vertical and the crankshaft is horizontal, we put two lateral extensions out at the bottom of the cylinder which form the mounting feet. These two projections are put out and that is the difference between the cylinder—I don't know how to

Page of Transcript

identify it —. Let's refer to the Lechtenberg Patent No. '789. I have reference to the feet shown in Figure 23 of the Lechtenberg Patent '789, the dotted line portion. The dotted line portion is different — on those particular parts we have made our molds so by changing several inserts we can make either casting in the same steel mold. So they are interchangeable. Also, the cylinders, if we ever want to, we could use the cylinder with the lateral extended feet in a horizontal engine and it could be used that way for service. Also, we have made the cylinder used on the horizontal cylinder and vertical crankshaft engine we assume will be used with generators and pumps, and let the pump and generator hold the engine, so no feet would be used.

84 The majority of the engines are sold by Briggs & Stratton to original equipment manufacturers; there are some sold for service, and some sold over the counter; but the biggest—by far the majority is sold to original equipment manufacturers. I participate in the sale of Briggs & Stratton engines to our customers. I go out from time to time. In going through the sales, we do not go through the ordinary purchasing agent. Through an original equipment manufacturer, it might be the president of the company who would see what engine was to be bought, and also the engineering department comes in to it. They make many, many tests of our engine before they approve it. It goes far beyond the purchasing agent himself, I would say. We don't sell our engines to some one who has been reading a colorful ad, for example.

85 The engines we build with vertical crankshafts and horizontal cylinders, similar to this shown in Exhibit 12, are used on rotary lawn mowers, practically all of them.

There a few people that use them for other things, but they are very small. As to whether or not there has been a long felt need or demand for a light weight horizontal cylinder, vertical shaft four-cycle engine, I would say that the demand has always been there, but probably we didn't know it as soon as we should have. The Briggs & Stratton horizontal cylinder, vertical crankshaft light weight engine of the Lechtenberg type has made a tremendous change in the power lawn mower industry picture, I would say. This is an estimate, but I would
6 say it has been a well-thought out estimate, that prior to the advent or the placing on the market of the engine embodying the Lechtenberg Patent that there were more two-cycle engines in the rotary lawn mower field than there were four-cycle. And I believe that in the last year, in 1954, since this engine has been in use there are more four-cycle engines sold for rotary lawn mowers than there are two-cycle. The question of the advantages of a four-cycle engine over a two-cycle engine has been debated but I would say that the four-cycle engine has many advantages over the two-cycle on a rotary lawn mower, and the reason for the advantages solely stem from the method of lubrication. In a two-cycle engine, the lubrication or oil is mixed with the fuel. And that has some inherent disadvantages that show themselves in many ways. For instance, I know that instruction books for two-cycle engines, they ask for the ports or the exhaust ports of the engine to be cleaned every twenty hours. Which is very difficult for the class of trade that these lawn mowers are sold to. There are no ports in
7 the cylinder on the Lechtenberg in the same sense. In the four-cycle engine it uses an intake and exhaust valve, and what corresponds to — cleaning out the ports on a two-cycle would be probably grinding the

valves on a four-cycle, and they are light as—oh, five or six times that, or maybe ten times. Also, there are other disadvantages when you mix oil with the gasoline, in that the spark plugs foul much more readily than they do in a four-cycle. Also there is a disadvantage to the operator of the lawn mower, inasmuch as he is walking directly behind it. The oil mixed with the fuel causes fuel smoke and it is objectionable to many people. And I would say as a general statement that the maintenance on a four-cycle engine is much less than it is on a two cycle. I would say prior to the marketing of the engine embodying the Lechtenberg Patent there were more
88 two-cycle than four. But that has now been reversed. That is based on my belief.

Briggs & Stratton has done a great many things to increase production with a view to meeting the demand for engines embodying the Lechtenberg Patent disclosure. Not only have more employees been put on, but in our present plant we are using every inch of space to increase production, and we have now built, on 85 acres of land we have on the outskirts of Milwaukee, a new plant that is just under 450,000 square feet, in which we will be in production in that plant some time around the middle of this year. And in that plant there will be only engines embodying the Lechtenberg Patent will be made. I am personally familiar in a general way with the problem of marketing the parts that Briggs & Stratton furnishes representatives and dealers. I get the reports of the servicemen and know who they call in their problems, and they come across my desk, and I know a great
89 many problems, but I don't go out and call on them or fix them. There are less parts to stock for the Lechtenberg engine than previous engines, and also you have the

advantage that I speak of, Your Honor, on the cylinders they would not have to stock the large cylinders, they would stock the smaller parts. I don't know exactly how many distributors Briggs & Stratton has, but it is somewhere in the neighborhood of 5,000. You call them distributors. I don't mean service people of all echelons; I don't want to call them distributors.

* * *

98 Mr. Jones asked me—or when I stated the price of our 6AH engine, which is Exhibit 10, the price should be $30.45, and the price of the 6AH Engine involved—under the Lechtenberg Patent is $23.10. Making a savings of $7.35, or a total of over 24%. Understand, I did not read the figures correctly. By the Lechtenberg Engine I have reference to Plaintiff's Exhibit 12.

When Mr. Lechtenberg was given the general assignment to develop a die cast engine, the problems that I
99 as a man skilled in the art knew he would have to meet and solve were these. He would have to make an engine that could be die cast on the equipment that was available. It would have to be made so that it could be assembled under our high production methods. Also, the engine had to perform, it couldn't have any defects, it would have to be equal in performance to anything we had before, and also it would have to meet the requirements of our customers.

When Mr. Lechtenberg came to me with his concept of the engine, Plaintiff's Exhibit 12, I thought the — it was just fine. At the time I thought it met all of the conditions we had to meet. But later on after going into it and really getting into the design and finding out and solving problems that — well, I probably didn't know existed, although they had existed prior to that time,

Page of Transcript

I did not recognize that they existed, let's put it that way. The way that Mr. Lechtenberg solved these unappreciated problems I have just referred to or mentioned was this. In this engine there is one major part as the cylinder and crankcase which — I think the best way to put it, is a constant piece, and a base or cover which was a variable. Therefore, we could hold the cylinder and crankcase constant for all different kinds of engines, and simply change the minor cover plate so that by changing those we could meet all of the requirements of our various customers. The major constants in the—this major casting are the breather, here, the breather with its baffle right alongside of the valve tappets; the valve chamber and its compartment for the spring; the valve guide; the valve seat; and the engine bore; and the main bearings; in fact of all of the parts in the engine. The ignition system, for instance, on the other side. That includes the coil. The coil and everything were constant in all types of engines. These constants I have referred to are not altered or changed when a different type of plate is used to change the possibility of the use of the engine. The cylinder is constant in all these engines. It is only the cover plate that is variable. When I speak of the cylinder being constant I am also speaking of these parts that go with it that I have identified.

* * *

Cross Examination

Exhibit 20 is an engine manufactured by Briggs & Stratton Corporation. It is not a vertical shaft engine, it is a horizontal shaft engine. Briggs & Stratton first placed a vertical shaft engine on the market, in, I believe it was 1949. That was a sand cast engine with some die cast parts. Cast out of — what would normally be cast

iron. These die cast dies were very expensive, some of them run into as much as $30,000, and, of course, some dies will cost less than that and others will cost more — depending upon the complications of the parts to be cast. That is an important factor. A manufacturing company would go to that expense, getting these expensive dies to do die casting, because they find it would be profitable for them to do it in the long run. I don't see any reason for doing it to get greater production, I can see doing it to get cheaper production. You can make as many of the others as you want. When we made it by the die cast the price was lower to the trade.

* * *

112 I saw an engine put out by McCullough, a vertical shaft engine, quite a few years ago. That was long before we put out this so-called Lechtenberg Engine. I think I would recognize one of those engines if I were to see it now. Defendant's Exhibit D-7 is a McCullough En-
113 gine such as I referred to in my last statement. And that engine was known and on the market prior to the advent of the so-called Lechtenberg Engine. Lechtenberg was not the conceiver of the circular flange or facing plate. We had the circular flange in our own engine prior to the Lechtenberg Patent. But not prior to McCullough. We saw the circular flange or plate on the McCullough Engine, I imagine that is where we got the idea.

There are parts in the picture in the left hand side of Exhibit 14d prime showing the cylinder and crankcase that are the same as shown in the patent drawings
114 of the Lechtenberg Patent. That would not generally be true of any cylinder and crankcase, they don't all look generally alike.

Page of Transcript

We first put a vertical shaft engine on the market in 1949. It was in June, of '49. And that was subsequent to the time we became familiar with the vertical shaft engine put out by the Clinton Machine Company. These vertical shaft engines that the Plaintiff put out in 1949 were not die cast. They had come die cast parts, but the main parts were cast iron. The crankcase and cylinder
115 were not die cast. It was a sand casting.

* * *

117 I have had quite a little experience with die casting. Fourteen years. Now, if I were to remove the bottom of this crankcase at this bottom wall—I am now holding Exhibit 17a with the cylinder upright—and the side wall closed instead of being open as it is on the exhibit, I could die cast it with minor modifications. Here we have in Exhibit 17a, a box-like structure constituting the crankcase opened at one side. Now, what we are going to do is close that side and open the bottom side. Now, the cylinder is in an upright position. When that is done, you can die cast that structure. You can get your die in
118 and out by these bosses with minor changes. You could make this come there. I said with minor modifications. Oh no, not without changing the structure. I said, any one that knew anything about the art could change it and modify it so we could die cast it. You could die cast that, assuming that this wall was closed and the bottom wall was opened and leave these bosses in there. He would get his die out because he would leave off right above the bosses and core them in from the other side. You would not have to have a long rib in there. You would have the rib in there but you would hollow that out from the opposite side. From the die casting.

Page of Transcript

120 We knew there was a market for a vertical shaft engine long before even McCullough or Clinton came out with their engine. But that we didn't consider the market big enough to be worthwhile getting into it had something to do with it, yes.

* * *

122 I have seen an engine constructed like Defendant's Exhibit 8 before, I think. That is one of the old vertical
123 shaft Clinton Machine Company Engines. I believe it was put out prior to the placing on the market by Briggs of their vertical shaft sand cast engine. I don't know the dates of that particular one. We knew of the construction of that when the so-called Lechtenberg structure was developed. At the bottom of this crankcase forming a part of Defendant's Exhibit D-8 I can see the bosses on the wall that support the crankshaft. And the bosses serve as a bearing for the crankshaft. Then there is another boss projecting upwardly just in alignment with the camshaft. That just projects a very small amount
124 from the bottom. Yes, there are inwardly projecting bosses on the base shown in Figure 10 of Lechtenberg patent '789. They are for supports for the crankshaft and camshaft bearings, rather. And the crankshaft extends through that higher boss, it extends through the hole 13.

There is, a similarity between the bosses in your exhibit D-8, and in this Fig. 10 and I would say that there are bosses in all our other old engines as well. I would also say there are inwardly extending bosses in our cast iron engines that have been built for years. This use of bosses such as shown in Defendant's Exhibit D-8 and the Lectenberg Patent '789 were not new with Lechten-
125 berg. There have been bosses in engines ever since I can

Page of Transcript

remember. I wouldn't agree they were used for the same purpose. There were bosses used to support the crankshaft. There were bosses used as support for the camshaft.

* * *

127 Examining Exhibit 17a it is not necessarily a fact that when that engine is in use the open side of the crankcase is facing downward. It is used that way sometimes. Now, when you put this cover plate on this you have a closed box. If you cover any crankcase completely you will have
128 a box. Exhibit D-8 has two parts removable. The crankcase has two parts. If you had just the bottom opening,
129 the side opposite the cylinder, you couldn't put the crankshaft into the engine. It is open on two sides. It is open as shown there in that Exhibit, the—the side opposite the cylinder is open and also the side at the bottom is open and covered. By "the side opposite the cylinder" I mean looking at the engine from the lower part of the blower housing, I mean the—the side of the engine nearest to me. When this crankcase is closed—I understand this crankcase has been cut away—When this crankcase is in proper condition you have a sump down at the bottom, a place to receive oil. On the Briggs & Stratton cast iron engine we have a sump, but not like that. All
130 four cycle engines have to have some place for the storage of oil, yes. Let me qualify that, all of the engines of this type. There are some that run with a dry sump. The idea of having a sump for the storage of oil or lubricants, that was not novel when Lechtenberg started to construct this so-called Lechtenberg structure. All four-cycle en-
131 gines need a place to store oil.

In Exhibit 19 of the Clinton VS700 cylinder it differs from the Lechtenberg Patent in that the upper wall of the crankcase and cylinder is open so that the crank-

shaft can be installed through the top. It is also open
132 on the side opposite the cylinder so that the connecting rod and other parts can be assembled; which is not true of the cylinder in the Lechtenberg Patent. Also, it has a steel baffle which does not completely enclose the opening to the breather. It has the construction of the crankcase is in the cam gear bosses are different in that they are simply a support for the cam gear. The bearing of the valve bearing is altogether different. So the cover plate of Lechtenberg carries a boss to serve as a bearing for the crankshaft, and another boss to serve as a bearing for the cam shaft. And that coverplate is on the bottom when the engine is used with the crankshaft in the vertical position.

133 Now you will note upon an examination of Defendant's Exhibit D-9 that the boss carrying wall has been cut away. Now, you have a removable plate with inwardly projecting bosses, but it wouldn't work in an engine. Because you have two surfaces coming together with a gasket and you can't ever make it tight. They can't
134 put a gasket in between the meeting metals in Defendant's Exhibit D-9 for the simple reason the gasket must cover a flat surface entirely. Where you have two gaskets inserted at right angles right where the gaskets intersect they will leak.

* * *

138 It is most difficult to say exactly what is the principal advantage of an engine constructed according to the Lechtenberg patent. But I should say one of the major advantages is in the constant cylinder and varying the cover plates for the various types of engines. Also, there
139 is the advantage of the of the construction of the Lechtenberg Patent in that it reduces the cost of the engine

Page of Transcript

more than twenty-four percent, which increases our market tremendously.

• • •

149 There is a boss designated as 156 in Fig. 5 of the Lechtenberg Patent. And a corresponding boss in the physical exhibit 16-b. And the corresponding boss in physical exhibit 16-d. The function of those bosses is to form the bearing for the crankshaft on the power take-off side of the engine. There is a similar boss in the engine, Defendant's Exhibit D-8. The function of the
150 boss ! referred to in Exhibit D-8 is to support the bearing for the crankshaft.

Q. Now, did those bosses in those three physical exhibits we referred to, Defendant's Exhibit D-8, Plaintiff's Exhibit 16b, and [Plaintiff's] Exhibit 16d, perform their function in substantially the same manner?

A. Yes, all support the bearing for the power take-off end of the crankshaft.

Q. They perform that function in substantially the same manner?

A. I don't know whether this engine Defendant's Exhibit D-8 does, but the previous engine we had did not. I would say this one does.

Now on the top wall of the crankcase of Defendant's Exhibit D-8 there is a dependent boss which serves as a support for the crankshaft. That is the zinc die cast
151 magneto plate. Now, in this physical exhibit 16a and the physical exhibit 16c, when that engine is used with the shaft vertical there would then be dependent from the top wall a smaller boss. There is dependent from the top a boss supporting the upper end of the crankshaft.

Page of Transcript

Q. And that boss functions substantially the same as the boss projected from the upper end of the crankshaft in the upper end of D-8, doesn't it?

A. It supports the upper end of the crankshafts, yes.

Q. There is a boss projecting from the upper wall of the Lechtenberg structure 789 when that engine is used with the shaft vertically, and that boss dependent from the upper wall serves as a support for the crankshaft, isn't that correct?

A. That is the same question as before

Q. That's right.

152 A. Yes.

Q. And that performs its function the same as the boss projecting from the upper wall of Defendant's Exhibit D-8, and Plaintiff's Exhibit 16a, and Exhibit 16c, that is correct, isn't it?

A. You are speaking of function?

Q. Yes.

A. That is the same function, yes.

Q. Performs it in the same manner, too, doesn't it?

A. No. In Defendant's Exhibit D-8 the upper bearing for the crankshaft is supported in a zinc plate which has to have a liner in order to work. In Exhibit 16a the boss is an integral part of it and composed of aluminum
153 and has no liner, so it doesn't perform in the same manner.

Q. Do these bosses in Exhibit D-8 function the same as the bosses as disclosed in the Lechtenberg 789?

A. By the word function I would say that if the function is to support the camshaft they were the same.

* * *

Page of Transcript

156 Q. So those bosses, while they serve indirectly at least as supports for the camshaft, do function differently when you are using the type of structure shown in Exhibit 18c and the type of structure shown in 17d?

A. There is a difference.

• • •

160 Examining Fig. 9 of the Lechtenberg Patent 789, the passage to which the numeral 35 is directed connects with the passage 36 and also with the interior of the crankcase through a long oblong hole adjoining the passage closed by 35 and the passage closed by 36. This hole opens up when the cores or when the casting is bored out after it is die cast. I know in die casting what is meant by "kissing cores". I would say those passages are made by the passage of three kissing cores. Explaining what I mean by kissing cores the terminology of kissing cores is not correct, the cores do not touch. If the cores touch the wall would become inoperative. But what it means is, there are cores that come very close to each other and form what we call flash, that can be knocked out
161 easily to form an opening. When you use kissing cores they don't abut together. They will score if they do. And when a casting is made those two passages formed by a core probably are in connection with each other for practical purposes, but the cores do not touch, there may be ten to fifteen thousandths of metal between, which is easily knocked out; but they do not touch. That method of making connections between the passages and elements was old for two cores, yes, but I don't know of it in three cores. By three cores I can best explain it by looking at Fig. 9 of the Lechtenberg Patent 789. The passage 36 would be made by another core, both of those cores — being stationary cores in the mold. The opening — the

side toward the sump on the left-hand side of Fig. 9 would be controlled by the core that formed the hollowed
162 out portion of the cover. All of those cores are stationary cores. Now, in the Lechtenberg Patent 789 as set out these passages 35 and 36 connect with each other because they break through a hole of the cover plate. Examining Defendant's Exhibit 5, I find there a passage breaking through a wall into another chamber. Yes, breaking through one wall. You have got just two cores there. In the structure shown in Fig. 9 you have three cores. The
163 opening 35 is made by a core in the mold. The opening 36 is made by the second core in the mold — let's call it the second. The opening on the left-hand side of the passage 36 is made by the third core.

The Court: The metal between the 2 and the 3 to be [broken away?]

A. Yes, the metal between every core, Your Honor.

In Defendant's Exhibit D-3 I find one passage communicating with a chamber or other passage through a common wall. There is one — one movable core connecting with the stationary core, as you would say. There would be only two so-called kissing cores used in forming that passage, but there may be other — there are
164 other cores in that casting. In Fig. 9 in the Lechtenberg Patent 789 there are three so-called kissing cores, and they are all stationary. In Exhibit 16b you have one core which forms the passage for the oil inlet. And you have another core which forms the passage for the oil
165 outlet. The large core is used to form the hollow portion of the casting in 16b, I believe.

* * *

169 So now we come down after we have discussed the function or structure and the operation and the results

Page of Transcript

of the Lechtenberg Patent, we find what he actually made was new was an engine that was lighter and cheaper, certainly, that is correct. When the Lechtenberg Structure set out in Patent 789 was originated, Briggs & Stratton were after the objective that was shown in the preamble of the patent, we wanted to make a better engine, a cheaper engine, I mean, a less expensive engine to build and also a better engine. And a lighter engine, that is correct, that was our hope. Now, if we were to do that

170 if we were to build this engine shown in Exhibit D-8 out of aluminum instead of out of cast steel, we would have a lighter engine. So to get lightness we had to change material, to get lightness we changed from steel or iron to aluminum on some parts where we could.

171 On rotary lawnmowers which have a deck on which the engine is mounted, some of those decks have holes already made in them, some of them don't. But those that don't have the holes made in them, they have deck templates to locate the holes. So they have standard spacing.

173 In the manufacture of the small engines that would be mounted on manufacturer's mowers you do not necessarily have to stay within certain dimensions. You cannot make it as large as you want or as small as you want. You have to stay within certain dimensions, yes, but you have certain variations, not exact dimensions.

* * *

175 The device shown on the panel to the left in Plaintiff's Exhibit 7 is taken from a Briggs & Stratton Engine, and

176 also from the Madle Patent 2,605,753. And the one to the right was taken from a Clinton Model 2500 Engine. There is an actuating cam shown in that chart on the panel to the left, that is the drawing made from the

Madle Patent. And there is a centrifugally actuated arm. The arm is in the color yellow. The cam is made in the color blue. The cam is mounted on the swinging arm, which is colored yellow. I find an arcuate swinging arm in that structure shown in the panel to the right.

Q. Do you find any cam mounted on that swingable arcuate arm?

A. There is a cam attached to it.

177 Q. Is there a cam mounted on it?

A. There is not a cam mounted on it, I wouldn't say.

Redirect Examination

The cylinder and crankcase casting shown in Exhibit 19 could be die cast with minor modifications. Such an engine would operate. It would not have the advantage I have outlined as exists in the Lechtenberg Patent. Exhibit 22 is a drawing which I had made of the exhibit — of the engine cylinder and crankcase in Exhibit 19 to show how this cylinder came to be die cast and the modification that would have to be made to do it. That change 178 there would not involve any great knowledge beyond that of the ordinary die caster. I just gave it to one of my men, and they did it.

179 There is a tremendous advantage in the manner Lechtenberg made the oil filler port, and the drain port, which is not present in the Defendant's Exhibit D-3 and D-5. The advantage is that the oil hole has to be out where the oil — where the operator can get at it; and in the Lechtenberg Patent the two cores are parallel in the diecast mold so as the blanks move apart the core comes with them. In the method shown in the small base, Exhibit D-3, a diagonal core — a movable diagonal core has to be used which has to be actuated by use of hydraulic

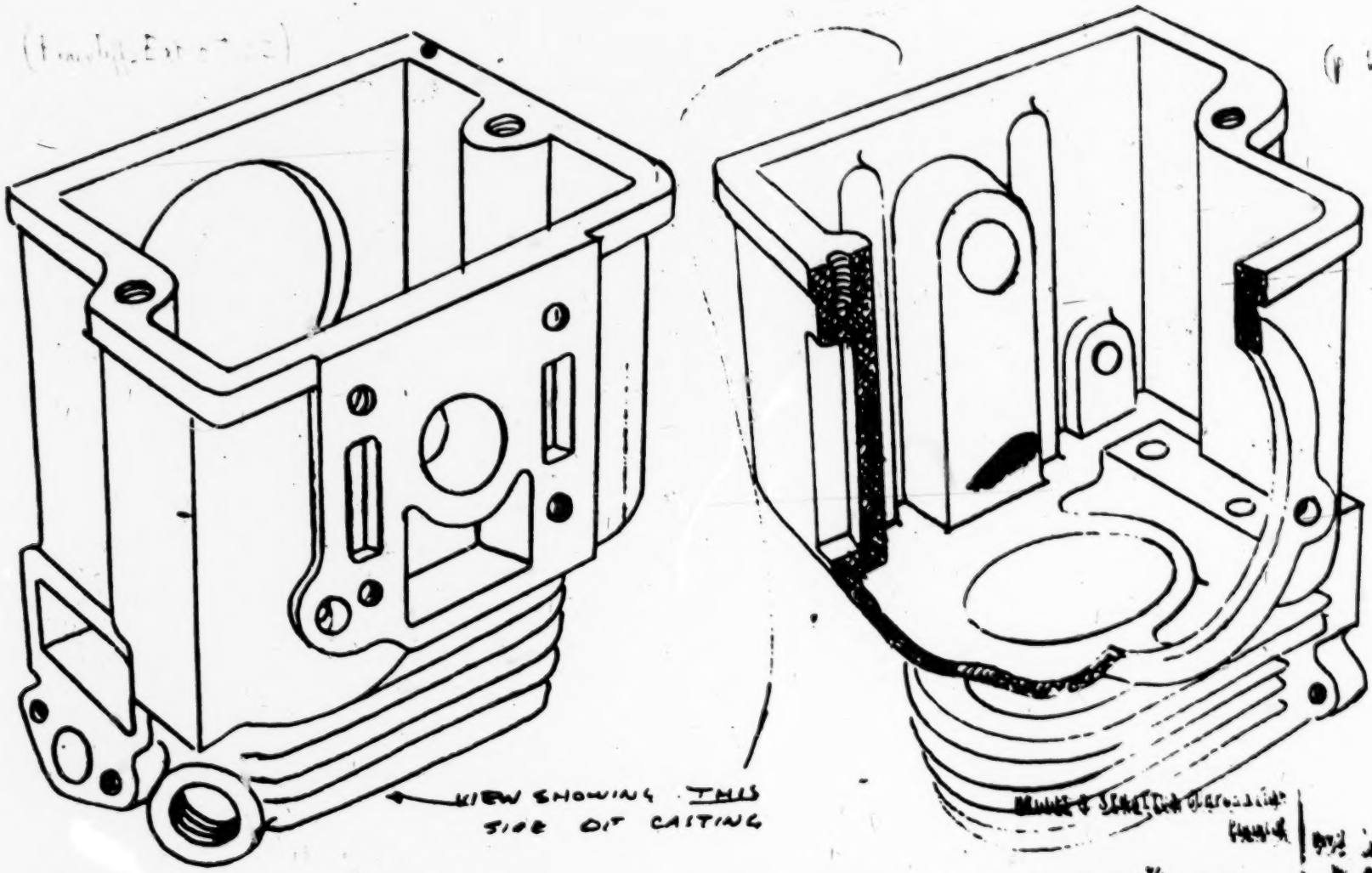

[illegible] 22, [illegible] 55.
Leo McNeely, Clerk,
[illegible]

[illegible]
Plaintiff
v.
CLINTON MACHINE CO. INC.
Defendant

PLAINTIFF'S EXHIBIT NO. 22.

Page of Transcript

cylinders. In the design of the Lechtenberg Engine, this is not being used. And if one were to really describe
180 the difference between the base in Exhibit D-3 and in the base or sump in the Lechtenberg Patent, if one core was omitted in the Exhibit D-3 the base could be filled just the same. If one core were omitted in the Lechtenberg Patent all of the openings would be closed — or the opening — there would be no connecting means between the points.

The McCullough Engine, Defendant's Exhibit D-7, is a vertical crankshaft, two cycle gasoline engine.

Recross Examination

There were two so-called aluminum engines before Briggs & Stratton put a small aluminum engine on the
181 market, I believe. I am not sure whether the Exhibit D-7 engine is all aluminum, but I think it is.

Redirect Examination

I believe it is true that Briggs & Stratton was the first to put on the market the first all-aluminum four-cycle engine.

JOSEPH ROBERT HARKNESS

Direct Examination

182 My name is Joseph Robert Harkness, my age is 39, my place of residence is 2773 North 84th Street, Milwaukee, Wisconsin, my occupation is electrical engineer with Briggs & Stratton Corporation. I graduated from the University of California in Berkley in December of 1935. I immediately went to work with the General Electric Company, and worked for them three years — for three years as a student engineer, and later as a de-

signing engineer. From 1940 to 1945 I worked as an electrical engineer with the General Electric Company. I was in charge of the development and designing of aircraft ignition systems. The ignition systems were used in the engines used on the P-47 Fighter Aircraft all through World War II. After that time for three and a half years I was in charge of mechanical design on the General Electric Company guided missile program.
183 By the way, I received from the University of California the Bachelor of Science Degree in Electrical Engineering. I have been with Briggs & Stratton some little over six years. I have been their Electrical Engineer and I have been responsible for the design development and engineering of their ignition system.

In a magneto the breaker points have an electrical function insofar as creating the spark, which is used to ignite the mixture in a combustion chamber. For this reason the time at which the breaker points operate or more specifically open determines the time at which ignition of the mixture occurs. Therefore, the timing of the opening of the breaker points is important to the
184 operation of the engine. The spark occurs at the spark plug there shortly after the point of the breaker opens. It is a matter of micro-seconds later. Referring to the Madle Patent, and first to Fig. 4, which shows a part of the gears dotted or in dashed lines the smaller gear is mounted on the crankshaft of the engine, and the larger gear is carried by, or part of, the cam shaft of the engine. And when I say camshaft I mean the shaft which operates the valve actuating cams. This gear which is No. 38 in Fig. 4 carries cam 37, which during the revolution or rotation of gear 38 passes under the arm 35 which is attached to a shaft 27. This shaft 27 is carried through

185 the wall of the crankcase, as can be seen in Fig. 6 on the next page, and at the outer end of this shaft is attached the breaker point which opens and closes with the stationary breaker point 30 to operate and control the ignition system, and thereby produce a jump spark. Now, to clarify this, the stationary breaker point is 30 and the one that is operated by the mechanism I have described is the movable breaker point No. 29. As shown in the drawings of the Madle Patent, shaft 27 has a rocking motion. Part 36 is the cam follower, and as the cam follower moves due to the passage beneath it of the cam, the Breaker point also moves, since they are both fastened solidly to rocker shaft 27. The part 35 carries the cam
186 follower. The manner in which the cam 37 is mounted on the crankshaft, or camshaft carrier gear 38 can best be seen on Fig. 7 and 8 of Sheet 3 of the subject patent. No. 45 in Fig. 7 is a weight. This weight is mounted on the cam gear by having a round boss at one end which acts as a journal, and it is journaled in a boss on the inside of the cam gear. This weight is held toward the axis of the camshaft by the spring 47, and under the influence of centrifugal force in No. 45 as the speed increases there is a tendency for this weight 45 to move away from the axis of the camshaft. Attached to this weight 45 is a breaker cam 37. This cam is attached in such a position that motion away from the axis of the camshaft moves the cam in a more or less circular or peripheral motion around the axis of the camshaft. This results in the cam having a somewhat different angular position with respect to the camshaft at high speeds than
187 it has at a standstill. In Fig. 4, or referring to Fig. 4, the camshaft rotates at one-half of the speed of the crankshaft due to the one to two gear ratio, and therefore, the

Page of Transcript

cam passes under the cam follower once every two revolutions of the crankshaft.

That breaker point opening does not occur always at the same point in the revolution of the crankshaft. At low speeds the fly weight, or weight which I mentioned, is held close to the axis of the camshaft by the spring, and consequently the cam lip or cam follower contacts at a later time during the revolution of the crankshaft than it does when the engine is rotating at high speed and the weight has been moved outwardly by centrifugal force. This results in an earlier opening of the breaker contact when the engine is operating at a higher speed. Referring to the shaft 27 in Fig. 4 for example, the advantages brought about in the structure shown in the Madle Patents by reason of that shaft and of the members associated with it are as follows. Shaft 27 performs
188 the important function of allowing the cam follower surfaces, which are rubbing surfaces, to be within the crankcase of the engine where they are subjected to continuous lubrication, from oil splash, and at the same time allowing the breaker points, which must be in an oil free region, to operate successfully, to be so located, and also it allows the breaker points to be in a very accessible position on the engine so they may be inspected and adjusted very easily.

With respect to Plaintiff's Exhibits 20—20a, 20b and 20c. Referring first to Fig. 8 on Sheet 3 of Patent '753. In the upper view, that is Fig. 7, this flywheel, which is acted upon by centrifugal force, this spring No. 47 in the illustration, retains the weight close to the axis of the camshaft at low speeds. The cam 37 in Fig. 8 is this cam which is attached to the follower weight, and by motion of weight 45 which occurs due to centrifugal

force at high speeds, the motion of the cam is effected
189 so that the time at which it passes under the cam follower is dependent on the speed of the camshaft.

The Patent drawings in figures — in all of the figures of the Patent '753, correctly represent Exhibit 20c. Removing the cover of this Exhibit 20d exposes the parts which show in Fig. 5 of Patent '753. The cam follower which is Part 36 in Fig. 6, is this part which is inside the engine in a lubricated space and it is connected through boss or bearing 25 by a shaft which is 27 in Fig. 4 to the breaker points which show in Fig. 5 and the actuation of which can be observed by moving cam follower 36. This, therefore, is accurately — Exhibit 20d is, therefore, accurately represented by the drawings in
190 Patent '753. The breaker assembly Exhibit 20d is mounted on the surface of one-half of the crankcase of the Exhibit 20b in this manner. (indicates) The camshaft, which I have already described, rotates within the crankcase of the engine in such a position that the cam surface passes under the cam follower, which is this point in 20d. This allows the breaker points to be mounted externally in an oil free zone and also in a position which is easily — at which they are easily inspected and serviced, but allows the cam follower and the cam to operate in a well-lubricated zone within the crankcase of the engine.

191 Exhibit 20b has the power take-off side or end wall of the crankcase, and the opposite wall of the crankcase. The side wall of the crankcase on which the breaker mechanism is mounted allows the breaker mechanism to be mounted close to the power take-off end wall of the crankcase. The magneto rotor is located on the opposite end of the crankcase from the power take-off end or face. Fig. 1 of the Patent shows the breaker box to be

located near the power take-off face of the crankcase, and shows the flywheel on the opposite end. Fig. 2 shows the magneto rotor to be mounted within the space enclosed by the flywheel, No.15 in Fig. 2. This Exhibit 21d is also a breaker mechanism to be mounted on the external surface of a crankcase of an internal combustion engine. And it also allows the breaker points to be in an oil free zone and to be readily available for inspection and adjustment, and it also is so designed that the breaker points are actuated by a cam follower which can be located within a well-lubricated zone of an internal combustion engine. Plaintiff's Exhibit 21c is a cam gear and camshaft assembly on which is mounted a weight similar to that found in Exhibit 20c. This weight is restrained or pulled toward the axis of the camshaft in both cases by springs, and it also — the weight also moves in both Exhibits away from the axis of the camshaft under centrifugal force, when revolving at sufficient speed. In Exhibit 21c the result of this action away from the axis of the camshaft is a rotation of the cam which results in the opening of the breaker point at an earlier time in the engine, essentially at higher speeds, and at a later time at low speeds, which is also the function of the mechanism
193 in Exhibit 20c. This is the cam follower in Exhibit 21d and its motion rocks the plastic lever in such a way that the breaker points are open when the cam follower moves toward the assembly, thereby resulting in opening of the breaker points. The parts to which I referred as "this", is the plunger-like cam follower for transmitting the action between the inner end or the end which will be in the crankcase in the normal assembly, and the outer end which is in the breaker box in the normal assembly. This breaker box assembly 21d is mounted on one-half of the crankcase in a position similar to that in which

Page of Transcript

the other breaker box is mounted, in such a way — in such
194 a position near the power take-off face of the engine in 21b that motion of the crankshaft brings the cam surface beneath the cam follower portion of Exhibit 21d. The position of mounting on one face or wall of the crankcase near the power take-off end appears to be very similar to that in the Madle drawings.

Cross Examination

I know what is meant by a normally closed circuit or a normally open circuit in the normal ignition system. And this Madle Patent is designed for use on a normally
195 closed system. So when you get your circuit you commonly open — you break the circuit.

Q. I notice you mentioned there that this crankshaft is driven at twice the speed of the cam shaft. Did you get that from looking at the drawings or did you get it from the specifications?

A. Neither.

Q. Can you tell by looking at Fig. 2 that the crankshaft is driven at twice the speed of the cam shaft?

A. No.

Q. And it might be driven at any proportion, might it not, depending upon the size of the gears?

A. It would not function properly as a camshaft.

196 It was not new to rotate the camshaft 23 at half of the speed of the crankshaft. Prior to June 7, 1951, with
197 respect to whether or not the breaker points had ever been mounted on the outside of the crankcase of an internal combustion engine, I believe every automobile has breaker points outside of the crankcase. And that made them accessible.

• • •

Page of Transcript

200 Now, in this Madle Patent 753 I referred to Part 45 or the weight, and that weight—you can see it in Fig. 7 quite clearly—and that weight carries the cam plate. And that cam plate is fixed on that weight. And in the drawing it shows the rockable weight 45 fastened on one side of the gear 38 and the cam plate fastened on the opposite side of the plate. In order to do that you have a slot in that gear 38. Now that structure is — method of construction or type of construction is followed in this Plaintiff's Exhibit 20c. You have the rockable weight or arcuate arm, you have a cam plate mounted on that
201 arm. Now, in order to mount that camplate on that arm on one side of the gear with the arm on the other side of the gear, that arm has to have a boss that projects through that slot. And that is shown in the Madle Patent '753. Now, in the operation of internal combustion engines they have such a statement as retarding and advancing the spark, that is quite a common term used in connection with internal combustion engines. And that is not peculiar to the single cylinder engine. In the Madle
202 disclosure the swingable weight 45 is used for advancing the spark as the engine speeds up. You want to advance the spark as the engine speeds up because the time of combustion has a tendency to be constant and the only way in which the combustion can be started earlier so as to have sufficient time before the piston reaches dead center is to initiate the spark at the earlier angular position of the crankshaft. So as the engine speeds up that piston is farther from the top of the cylinder when the spark occurs than when the engine is going at a slower speed. So you have a greater distance between the top of the piston and the top of the cylinder, that is the possible adjustment for speeding up the spark at the higher

Page of Transcript

speed. It was not new to retard and advance the spark in the operation of internal combustion engines, prior to June 7, 1951. That was well known. It was not new to
203 advance and retard the spark by the operation of swinging weights. That was well known prior to that time. And I have seen various types of mechanisms and constructions used to swing weights for advancing and retarding sparks proportionately to engine speeds prior to June 7, 1951.

In Exhibit 21d the rod is moved by a pressure on the end of the rod in one direction and by a spring in the other direction. And the pressure which works on one end of the rod is radially relative to the gear or the crankshaft. Radially on that plunger. It does work out
204 at the other end. What it does at the other end, I would say it rocks. One end of that beam carries the movable structure, the movable contact. There may be motion in that [plunger], the motion of the camshaft may rotate it. I believe it is correct that the operation of those parts shown in 21d does not require a rotation movement of any of those parts. Referring to Exhibit 21c, the camshaft, there is no cam out along this rotating or rockable arcuate arm responsive to centrifugal action.

My answers would not be different to the questions here as to various parts being new, such as the use of rotating cam shaft at half of the crankshaft speed, if the date had been set at March, 1946, instead of June 7,
205 1951. The structure we are talking about, they were made years ago, like rotating the camshaft at half of the crankshaft speed, that was done years ago, and mounting the points outside of the crankcase, that was done years ago. Prior to 1946. This system of adjusting and retarding and advancing the spark by swinging weights, that was known before March of 1946.

Page of Transcript

Now we are going to mount this swingable weight with that cam on it on a gear carried by the crankshaft, then we are going to contact it with the cam follower and cam follower arm, such as shown in the Madle Patent, we are going to start rotating that crankshaft; and now the parts 35, 36, 37, 27, 28, and 29 will operate mechanically in the same way as they are mounted on the camshaft. I refer particularly to Fig. 6. And the
207 swingable weight will operate the same way on that cam plate.

208 A. It is possible to build a four-cycle engine having more than one cam on the camshaft for each valve, in which case their ratio changes are multipliable by two, can be used.

Q. Would that mean more than one camshaft on the engine, sir?

A. No, a single camshaft.

Q. I am referring now to the Madle drawing; would that be possible on the engine shown there?

A. Since the drawings do not show the number of lobes on the cam operating the tappet, it would be possible.

• • •

---

210 E. EUGENE KOHLS

Direct Examination

211 E. Eugene Kohls, age 52, residence 9712 North Lake Drive, Milwaukee 17, Wisconsin, occupation, Patent Attorney. I was first associated with the patent profession in 1919 when I entered the employ of one of the Milwaukee patent attorneys office as a draftsman. The name of the office was Morsel & Keeney at that

Page of Transcript

time. It is now Morsel & Morsel. I was with Morsel & Keeney as a draftsman until December, 1920, when I left to join with a patent attorney in Milwaukee by the name of Ed Hunt, also in the capacity of draftsman. Worked for Ed Hunt a matter of about two months, two or three months, then Ed Hunt took seriously ill and Ira Jones bought out the practice of Ed Hunt, and since that time I have been associated with Mr. Jones. The first several years, and I think probably until 1925, as a draftsman. After that as what we in the patent profession refer to as specification writer until about I think it was 1929 when I was admitted to practice before the
212 Patent Office. As I say, I was admitted to practice in the Patent Office in 1929, and in 1935, I was admitted to the Bar, the State Bar of Wisconsin and the Federal Bar. I have prepared and prosecuted very many patent applications. I am in charge of the application work in the office of—particularly having to do with the Briggs & Stratton applications. And I had charge of the prosecution of the three patents that are here involved. I would say that as to the Madle application, while I did not personally prepare that application, I was instrumental in its prosecution. It was prepared in its initial state under my supervision. But the two Lechtenberg applications were prepared by me and prosecuted by me in toto.

This chart, designated as Chart No. 3, which is in evidence as Plaintiff's Exhibit No. 7 was made under
213 my supervision by Miss Lois Boehm, one of our draftsmen in the office. When I say that we have taken—by we, I mean under my supervision and Miss Boehm actually doing the work, when I say that we took extreme precautions to make these illustrations as accurate and

as perfectly accurate as possible, I am perhaps stating a — stating it very lightly, but I would like to explain that despite those precautions if I had to do this chart over again there would be at least two changes or two things that I would do differently. In the left-hand panel, which is entitled Madle Patent No. 2,605,753, you will notice that there is a line with an arrow on it, and beneath that line is the legend "To Spark Plug." I would have omitted that, or had that omitted, if I were doing it now, because it actually has no part in the subject matter that is here under consideration. It appears simply because Fig. 4 is an absolutely slavish copy — Fig. 4 of the Madle Patent — omitting only the right hand portion of the figure in rotor 16 and the stator 18; that portion of Fig. 4 was omitted for the sake of space and also because it had no part in the subject matter. For the same reason I would have omitted the corresponding arrow in the right-hand panel which bears the legend "To Spark Plug." But I am reminded, of course, that even in the Defendant's Model 2500 Engine, which is portrayed in this part of the chart, there must of course, be a wire to the spark plug.

To best illustrate that Claim 5 of the Madle Patent is readable on and is satisfied by Defendant's Model 2500 Engine, the Claim is broken up into its constituent elements and colors have been applied to all of the immediate elements and particularly the elements of structure as well as numerals — and corresponding numerals and colors are applied to the various elements of the illustration of the Defendant's engine, and also to the reproduction of Figs. 4, 6 and 7 of the Madle Patent. The reproductions or illustrations in the right hand panel are as truly accurate representations or depictions of the Defendant's engine as represented by the Exhibits 21a,

MADLE' PATENT NO. 2,605,753 INFRINGED BY DEFENDANT'S MODEL 2500 ENGINE

MADLE' PATENT NO. 2,605,753

Fig. 4.

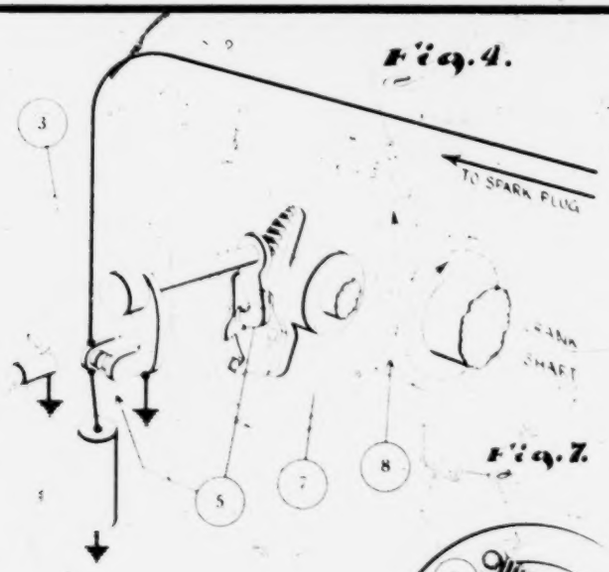

Fig. 7.

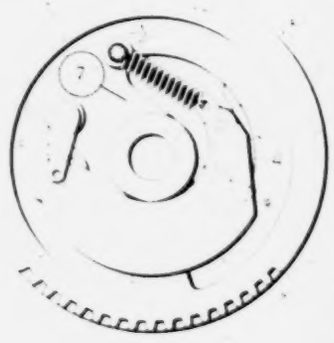

Fig. 6.

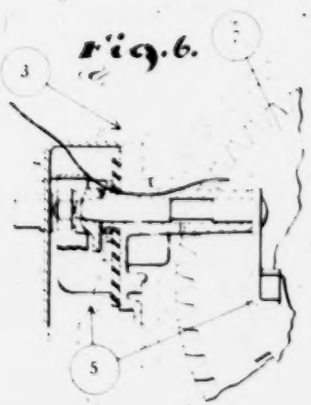

TYPICAL MADLE' CLAIM

Claim 5

In an ignition system for a single cylinder four cycle internal combustion engine of the type having a crankshaft driven magneto for effecting spark plug operation

1 fixed and

2 movable breaker point

3 accessibly mounted on the exterior of the engine remote from the magneto

4 a cam follower movably supported by the engine

5 remote from the breaker points

6 a motion transmitting connection between the cam follower and the movable breaker point

such that separation of the points is effected by motion of the cam follower in one direction

7 a rotatable part adjacent to said cam follower

8 a driving connection between said rotatable part and the engine crankshaft

whereby the speed of rotation of the crankshaft determines the speed of rotation of said rotatable part

9 a member carried by said rotatable part for rotation therewith and for motion relative thereto in response to centrifugal force and

10 a cam surface on said member engaged by said cam follower

for imparting motion to the cam follower in said direction once each revolution of the rotatable part to effect breaker point separation at instants depending upon the speed of crankshaft rotation and the position of said member relative to the rotatable part as determined by the centrifugal force acting on said member

DEFENDANT'S MODEL 2500 ENGINE

Fig. 1.

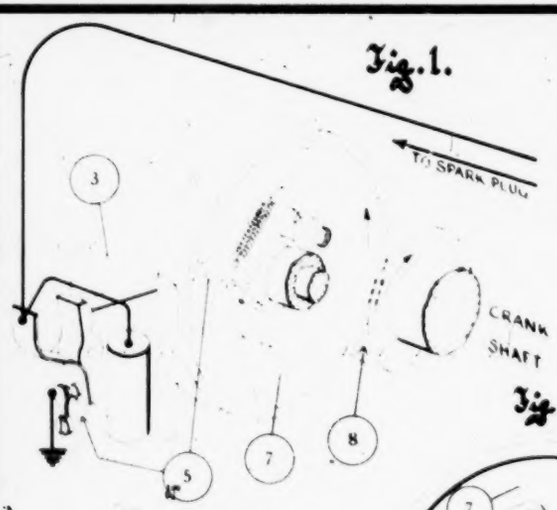

Fig. 3.

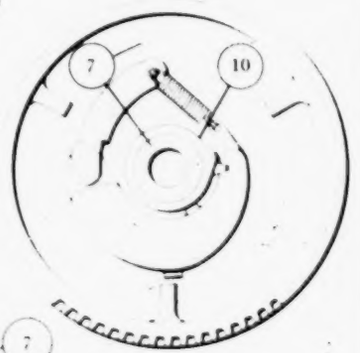

Fig. 2.

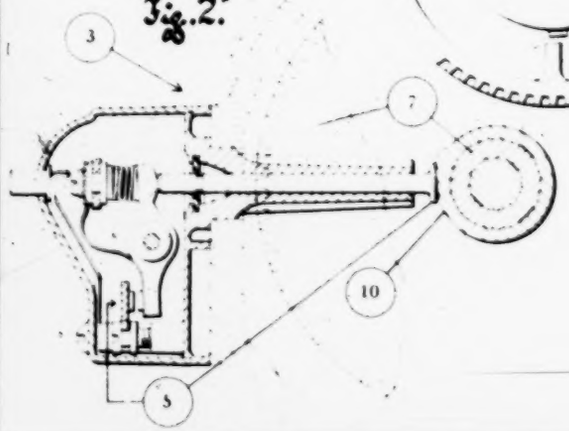

IRA MILTON JONES

Page of Transcript

-b, -c and -d, as could be produced. Beginning with the
217 recitation of the introduction of the claim and which I might explain merely states the environment in which the claimed invention is found, we find that the claim calls for, "In an ignition system for a single cylinder, four cycle internal combustion engine of the type having a crankshaft-driven magneto for effecting spark plug operation: fixed and movable breaker points accessibly mounted on the exterior of the engine remote from the magneto." In the claim this is here identified by the numerals 1 and 2 and respectively by the colors I think you would say this is cerise and blue-green. Now in the illustration of the Madle Patent Figs. 4, 6 and 7 in the left-hand panel, the fixed and movable breaker points are readily found by virtue of the application of the respective colors cerise and blue-green. Likewise in the right-hand panel we have the same situation of the fixed
218 and movable breaker points respectively colored cerise and blue-green. The claim continues with the definition that these fixed and movable breaker points are "accessibly mounted on the exterior of the engine remote from the magneto." It is a little bit difficult to illustrate the accessible mounting of the fixed and movable breaker points as specified in the claim by reference to the Figs. 4, 6 and 7 of the Madle Patent alone. Nevertheless, in the light of the entire disclosure of the Patent the designation by means of the numeral 3 and the arrow running to the broken line enclosing the fixed and movable breaker points, and also the arrow leading from the colored circle 3 in Fig. 6, do I believe indicate the fact that the fixed and movable breaker points are mounted on the exterior of the engine accessible and remote from the magneto. The Patent specifications I am quite certain brings out the fact that the magneto is mounted under

Page of Transcript

the flywheel of the engine and hence would be a substantial distance from the location of the mounting of the fixed and movable breaker points. The same manner of distinguishing that accessible mounting of the fixed and movable breaker points and its remoteness from the magneto has been employed in the right-hand panel which portrays Defendant's Model 2500 Engine. Now,
219 we come to the fourth numbered element of the claim—fourth numbered element of the claim, which is "a cam follower movably supported by the engine." That is colored orange and, as we have already observed, there are no numerals — no numbers in the drawings, so we depend entirely and solely upon the orange color to designate and identify the part of the structure illustrated as the cam follower. Now, the claim required the cam follower of course, to be "movably supported by the engine," which is the fact in each instance. The cam follower is
220 attached at the inner end, and viewing the chart in each instance the left-hand panel and right-hand panel, it is at the right-hand end of the shaft which is colored green, and that shaft is — Mr. Harkness testified is illustrated in Fig. 6, it is movably mounted in the engine. Now, I might add at this point that — and I should have done this sooner. I took a liberty — slight liberty in Fig. 6. In Fig. 6 of the Patent drawing you will not find any suggestions of the cross-hatch wall of the crankcase such as appears in Fig. 6 of the Chart. On the chart in the Fig. 6 in the left-hand panel, and in Fig. 2 of the right-hand panel, I have indicated in the broken lines that part of the crankcase which was directly adjacent to the breaker point mechanism, which, as Mr. Harkness testified, is secured to and fastened to the side wall of the crankcase. Column 6, lines 3 to 9 inclusive of the Madle Specifications refers to the location of the breaker con-

Page of Transcript

tact assembly. "One of the objects of this invention is
221 achieved by relocating the breaker contact assembly 21 remote from the flywheel and on the exterior of side-wall 22 of the crankcase which is adjacent to the cam-shaft 23, where it is readily accessible for adjustment or replacement of the breaker contacts."

I believe we left off with an orange color. That brings us to the fifth — numbered element of Claim 5, which reads, "Remote from the breaker points" and that, of course, refers to the mounting of the cam follower and the location of the cam follower. We have attempted to illustrate that by the two arrows which lead from the colored circle which is colored red and bears the numeral 5 in Fig. 4 and Fig. 6 of the left-hand panel, and Fig. 1 and Fig. 2 of the right-hand panel. And that remoteness — that remote relationship between the cam follower and the breaker point is a result of the cam follower being inside of the crankcase at one side of the crankcase wall and the breaker points being on the outside of the crankcase — on the outside of the crankcase wall. The next element of the claim, "a motion transmitting connection between the cam follower and the movable breaker point," is colored green, is identified, rather, by the green coloring in the claim, and in the left and right-hand panel drawing portion there shown.
222 In the left-hand panel. In the left-hand panel this shaft connects the cam follower and the blue-green movable contact. And in the right-hand panel it is the shaft colored green which extends to the left from the button-like cam follower colored orange and bears against the one end of the medially pivoted lever also colored green. It is by virtue of this connection between the orange-colored cam-follower and the movable breaker point,

Page of Transcript

223 which is colored blue-geen, by virtue of this connection that it is possible to have the breaker points — the breaker mechanism located outside of the crankcase at one side of the crankcase wall, while the cam follower and cam against which it bears, which being rubbing parts or relatively movable parts requiring lubrication, can be inside of the crankcase wall where they will automatically be lubricated. There is nothing in this Claim 5 that requires the motion transmitting connection to be either rotatable or longitudinally movable. Claim 5 merely defines this motion transmitting connection as a connection. And obviously, of course, the term "connection" would be satisfied by many different mechanical devices or expedients. The Claim continues with the further definition of the motion transmitting connection in the language, "such that separation of the points is effected by motion of the cam follower in one direction." And then goes on with a recitation of a rotatable part adjacent to said cam follower. That rotatable part finds response in the Madle structure as well as in the Defendant's Model 2500 Engine by or in the large gear which is on
224 the camshaft and meshes with the smaller gear on the crankshaft. The color brown has been applied to this element of the claim and to the identifying circles in the left and right-hand panels, which incidentally also bear the numeral 7. The next element of the claim, and quoting now, "a driving connection between said rotatable part and the engine crankshaft," as I have already indicated, is provided by the meshing gears on the camshaft and the crankshaft, and which in the drawings are identified by the numeral 8 and the arrow leading therefrom and the comparable coloring. That driving connection, of course, supports the following item in the claim, quoting,

Page of Transcript

"whereby the speed of rotation of the crankshaft determines the speed of rotation of said rotatable part." The next element of the claim to which I have applied the color yellow, quoting from the claim, reads as follows: "a member carried by said rotatable part for rotation therewith and for motion relative thereto in response to centrifugal force." In the portrayal of the Madle Patent in the left-hand panel that part comprises the arcuate shifting weight very clearly shown in Fig. 7 and just barely discernible in Fig. 4, and not shown, of course, in Fig. 6. In the right-hand panel, which depicts Defendant's Model 2500 Engine, it is again the arcuate
225 shifting weight or weighted member colored yellow. And here I would like to point out that this weight in each instance, both in the Madle Patent and in the Defendant's structure, is pivoted to the web of the gear which is the "rotatable part" of the Claim, and which is the element defined in the claim as the rotatable part, and hence, of course, it must move with that cam or that gear. It is also relatively movable with respect to the rotatable part by virtue of the fact that it is pivoted thereto and the relative movement is in response to centrifugal force as was explained by Mr. Harkness during his description of the Madle structure which is illustrated in this Chart. We should also understand that the member referred to in the 9th element of the claim is not just one physical piece of mechanism in either of the two structures, that is, the Madle Patent or the Defendant's structure. In the Madle Patent it is clearly shown by the application of the coloring, it is not only the weighted member but that part which is fixed thereto, and which has a cam surface formed thereon; and in the Defendant's structure that element of the claim finds

response in the weighted element — or the weighted element per se, and the circular ring-like structure which is mounted for rotation on the hub of the gear to which—
226 to which one of the lines leading from the numeral 7 in Fig. 3 is directed. That sleeve or collar is, you might say, connected — not connected but geared to the weighted arcuate member so that they partake of the same motion in response to centrifugal force. Now this exhibit, Plaintiff's Exhibit 21c, is exactly the structure shown in the right-hand panel of the Chart. In Fig. 3. Now, the collar that I was talking about, I am moving slightly off of the hub of the gear upon which it is journaled. Your Honor will notice that there is a tooth projecting from that collar which engages in a notch in the weight so
227 that any response of the weight to centrifugal force, which is outward, away from the axis of rotation, imparts rotation to the collar. If I may have the structure of the Briggs & Stratton engine which is portrayed in the left-hand panel of the chart. The weight, Your Honor, will notice, is very much similar—almost identical in shape to that of the Clinton structure. It happens to be on one side of the gear and the cam, and the portion which that weight moves, and which corresponds to the collar, is on the other side of the face of the gear. Accordingly, the response of the weight, in the Briggs & Stratton structure, Plaintiff's Exhibit 20c, the response of that weight to centrifugal force carries with it that portion on the opposite face of the gear on which the cam surface is located. So in each instance the response of the centrifugal—the centrifugal response of the weight to centrifugal force propels that part of the structure upon which the cam surface is located. The next element of the claim, which is No. 10 and is colored deep blue,

Page of Transcript

is, "a cam surface on said member engaged by said cam
228 follower." That surface is the surface I have just been referring to, which in the Madle structure is on the face of the cam and effects a motion parallel to the axis of rotation, and in the Defendant's structure as shown in the right-hand panel is on the circumference of the collar and effects a motion radially or normal to the axis of rotation. And the claim winds up with the definition or a description that this cam surface is on the member engaged by the cam follower "for imparting motion to the cam follower in said direction once each revolution of the rotatable part to effect breaker point separation at instants depending upon the speed of crankshaft rotation and the position of said member relative to the rotatable part as determined by the centrifugal force acting on said member." And said member, of course, has reference to that part of the structure which is colored yellow. The Defendant's Model 2500 Engine as depicted in the right-hand part of the chart, Plaintiff's Exhibit No. 7, finds full response in the claim in the center panel of the chart.

229 At the outset, as was the case in the Chart which is Plaintiff's Exhibit No. 7, the Chart, Plaintiff's Exhibit No. 5 was made under my supervision by Miss Lois Boehm. I would like to point out that in the projection of this chart, which in the illustrations uses actual photographs as distinguished from original drawings that we employed in the Chart, Exhibit 7, the photographs themselves were taken by Miss Boehm who is quite an accomplished photographer.

The Court: May I have the attention of Mr. Jones. I notice in the pre-trial conference in connection with this Patent you are relying upon the claims 1, 2, 4, 5,

Page of Transcript

6, 7, 8, 14, 15 and 16. I take it this chart really relates to Claim 6.

230 *Mr. Jones:* No, Your Honor, I am using that as a typical claim, I will supply the rest of the claims. I am just starting with Claim 6 first because that is the one on the chart.

The Witness:

Now, the actual castings which are indicated in the left-hand panel in Chart, Exhibit No. 5, are photographs which I have said were taken by Miss Boehm of the main cylinder and crankcase of one of the Briggs & Stratton so-called Lechtenberg Engines and the base or cover casting. And to the left of those main castings, which are two castings, is pictured the crankshaft and the crankshaft assembly of that engine. In the right-hand panel there are photographs of the corresponding parts of the Defendant's VS100 Engine, namely, the crankcase, cylinder casting, and the cover or base casting as well as the crankshaft and camshaft assembly. The actual
231 castings of which the photographs were made to provide these reproductions are in Court as exhibits. The purpose of this chart, of course, is to graphically illustrate how the claims of the Lechtenberg Patent 2,693,789 charged to be infringed, apply to the Defendant's VS100 Engine. The Chart, as Mr. Jones, has pointed out, does not attempt to show the application of all of the claims relied upon, but gives only one as the typical example, and that, of course, is the claim 6 in the center panel. The illustration of photographs in the left panel of the chart, Plaintiff's Exhibit 5, are pictures of castings as actually shown in the Lechtenberg Patent '789. And in that connection it might be interesting to know that Miss Boehm also took the pictures, the photographs of the castings that were used in the preparation of the drawings of the

LECHTENBERG PATENT NO. 2,693,789 INFRINGED BY DEFENDANT'S SERIES VS100 ENGINE

PLAINTIFF'S MODEL 6BH ENGINE

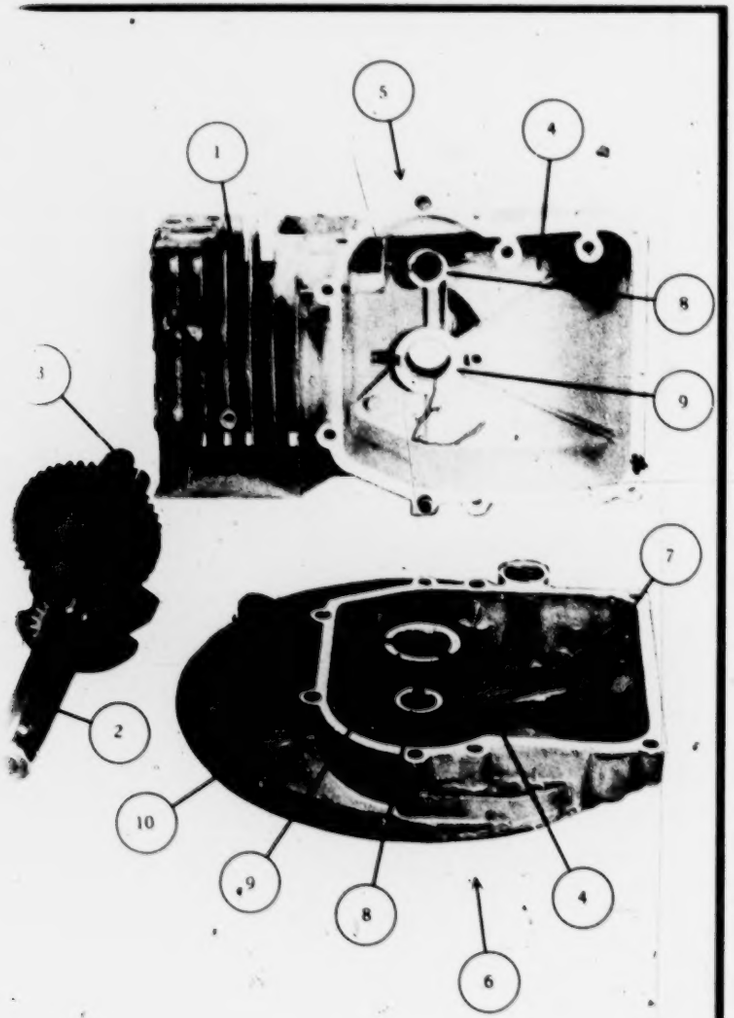

TYPICAL LECHTENBERG CLAIM

Claim 6

A single cylinder, four-stroke cycle internal combustion engine adapted for operation with its cylinder horizontal, said engine having in addition to its

1. cylinder
2. a crankshaft,
3. a cam shaft parallel to the crankshaft, and
4. a crankcase with spaced apart top and bottom walls through which the upper and lower ends of the crankshaft pass,

said engine being characterized by the fact that: the cylinder and all portions of the crankcase except its bottom wall through which the lower end of the crankshaft passes is

5. one casting;

by the fact that said bottom wall comprises

6. a cover removably secured to the casting and having
7. a relatively deep depression;

by the fact that the cam shaft is

8. supported by the cover and the top wall of the crankcase and the
9. bearings for the crankshaft are in said cover and the top wall of the crankcase;

further by the fact that the depression in the cover provides an oil sump;

and said cover being further characterized by

10. mounting means formed integrally therewith for mounting the engine with its cylinder horizontal.

DEFENDANT'S SERIES VS100 ENGINE

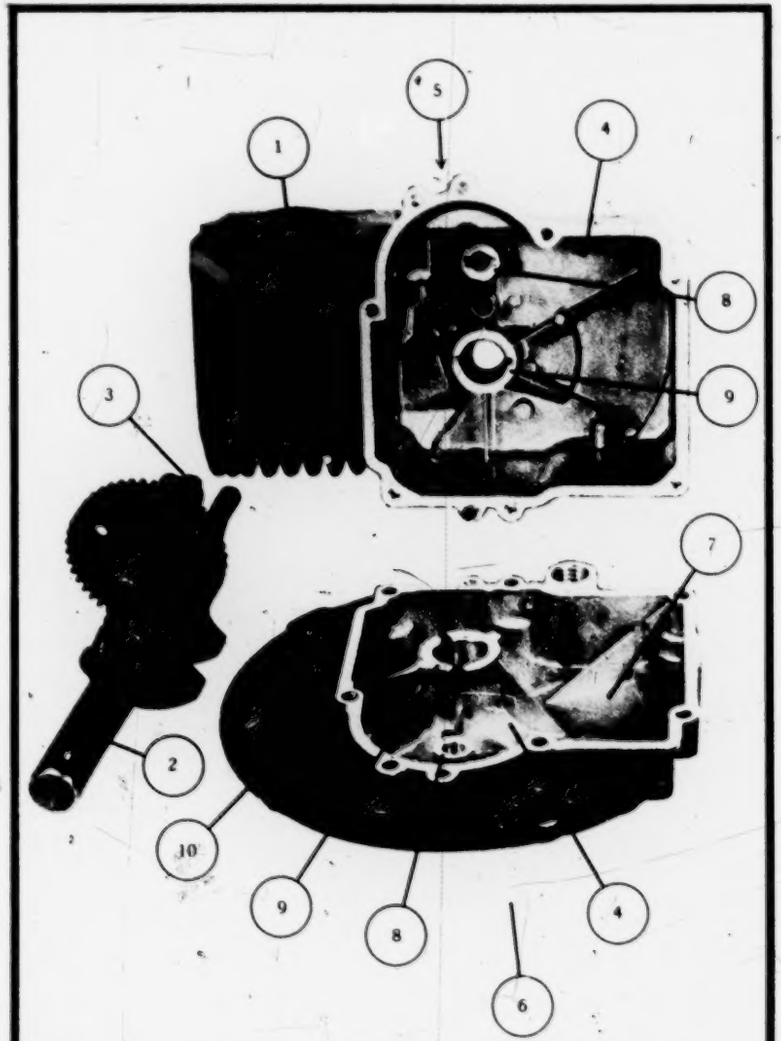

IRA MILTON JONES

Page of Transcript

Patent application and notations from the drawings of the patent application. And she used photographs of actual castings as shown here in the making of those drawings by squeezing them through as we see. There
232 are two ways of doing it, you take the photograph and the photograph is reproduced on relatively thin paper. And then you can blacken the back of the photograph with a soft pencil then with a sharp pencil, tracing the lines of the photographs, squeezing through the photograph much in the nature of carbon copies or much in the way carbon copies are produced, the impression of course, being made directly upon the paper that is used for the carbon of this drawing. That outline is then straightened out and inked in.

Claim 6 of the Lechtenberg Patent '789, which has been selected as typical and which is charged to be infringed, reads: "A single cylinder, four-stroke cycle internal combustion engine adapted for operation with its cylinder horizontal, said engine having in addition to its cylinder" — and the cylinder has been identified by the numeral 1 and a cerise color applied to the element in the claim, and also to the picture of the cylinder por-
233 tion of the main casting in both left-hand and right-hand panels of the chart. Going on with the claim it calls for "a crankshaft." The crankshaft element has been identified by the color blue-green and the numeral 2, and that is readily found in each of these two panels, left and right-hand, designating the crankshaft. The third element of the claim reads: "a camshaft parallel to the crankshaft." That has been identified by the color gray both in the photographs and in the reproduction of the claim. The fourth element which is colored orange reads: "a crankcase with spaced apart top and bottom walls

Page of Transcript

through which the upper and lower ends of the crankshaft pass." Now, that is the box-like structure which I am sure Your Honor has already been able to identify in the physical exhibits that are in Court and is partly and integrally a part of the cylinder casting. The fact that the entire portion of the claim which I have just read all emphasizes the term: said engine having in addition to a cylinder its crankshaft, a camshaft, and the crankcase, with spaced apart top and bottom walls through which the upper and lower ends of the crankshaft pass. Those portions of the engine, of course, are conventional. And now we come into that portion of the claim which recites its characterizing feature. And that
234 is noticed by the language: "said engine being characterized by the fact that: the cylinder and all portions of the crankcase except its bottom wall through which the lower end of the crankshaft passes is one casting." That has been identified by the color — the red color, and is readily understandable not only from the pictures in the chart but from the actual physical exhibits that are in Court and is one of the characterizing features of the invention. It is further, the claim states — that the invention on this engine is further characterized by the fact that the bottom wall comprises a cover having a relatively deep depression removably secured to the casting. That has been identified by the green color and the numeral 6 and is also on the two castings illustrated or depicted in both the left and right-hand panels. That cover which is removably secured to the casting is defined in the claim as having a relatively deep depression, to which the line leading from the numeral 7 to the circle colored brown in both the left and right-hand panels, is directed. The same color brown is applied to the recita-

Page of Transcript

tion of the element in the claim. The claim further carries on with the language — "by the fact that the camshaft is supported by the cover and the top wall of the crankcase." That relationship is depicted in the chart by
235 the comparable color with the lines leading from the colored circle to the wells in the bases shown in the main cylinder crankcase casting and in the cover casting, in both panels of the chart. The characterization of the invention goes on in Claim 6 with the recitation that the bearings for the crankshaft are in said cover and the top wall of the crankcase. And here again both by the numeral 9 and the color yellow we have indicated that the main casting is well as the cover casting provide the bearings for the reception of the crankshaft. And the claim continues with the language — with the characterizing language that the depression in the cover provides an oil sump. That is the reason that the claim defines the cover as having a relatively deep depression. That is the relatively deep depression that provides the sump that contains the oil that lubricates the inside of the engine. The claim concludes with this statement: "said cover being further characterized by mounting means formed integrally therewith for mounting the engine with its cylinder horizontal." To this element of the claim, namely the mounting means, the numeral 10 has been applied as well as the dark blue coloring. And that mounting means in the engine, of course, is the circular
236 flange or disc-like structure which is an integral part of the cover.

Claims 7 and 8 are dependent claims and are both dependent upon claim 6, which is reproduced on the chart. The dependent claim, as Your Honor probably realizes, picks up everything included within it, every-

Page of Transcript

thing of the main claim upon which it is dependent, and merely adds to that main claim features not specifically claimed in the main claim. So in reading a dependent claim both from the standpoint of its principle and conception everything recited in the main claim must be considered along with the elements specifically recited in the dependent claim. There is, of course, no need or point in repeating what has already been said about the application of Claim 6 to the structure of the Lechten-
237 berg Engine and the Defendant's VS100 Engine. So beginning with Claim 7 we find that this claim further amplifies the structure recited in Claim 6, particularly in its definition of the mounting means in that it requires the mounting means which is element 10 in Claim 6 as reproduced on the chart, Exhibit 5, to comprise the substantial circular flange on the cover having a flat downwardly facing rim concentric to the crankshaft axis and adapted to seat upon a flat surface. The element 10 as shown in the left and right-hand panels of the chart does have such a circular flange as indicated by the arrow running from the numeral 10 in the circle which extends to the casting with that circular flange. And although it does not show in the photographs on the chart this flange has a downward facing rim which is concentric to the crankshaft axis, and of course it is adapted to seat upon a flat surface and the entire underside of the rim lies in a common plane. Claim 8 also amplifies the definition of the mounting means recited in claim 6 and does so even more specifically than does Claim 7, since it requires the mounting means to extend from the region of the oil sump toward the cylinder head to thereby enable the mounting means to provide a large mounting
238 area without greatly increasing the outline of the engine.

Page of Transcript

Now, I think it would be well if I could refer to one of the actual cover castings, to better illustrate what we have in mind and I know we had one of the cylinder crankcase castings. As I indicated, the mounting means as it is defined in Defendant's Claim 8 is specifically defined as extending from the region of the oil sump toward the cylinder head. Now, the cylinder head, of course, is applied to the upper end of the cylinder crankcase casting in each of the exhibits 16a and 16c, the former being that of the Briggs & Stratton Engine and the latter that of the Clinton Engine. So the cylinder head would be the upper portion of these physical exhibits, the very extreme top. The casting surface not only
239 has a cover for the main casting but also has the circular flange which provides mounting means as recited in Claim 6 and also in Claim 8 — is the physical exhibit 16b and 16d, and if Your Honor will realize that when these two castings are assembled and brought into proper correlation by virtue of engagement of the dowel pins which project from the open edge of the main casting and enter holes in the front edge of the cover casting, that cover casting will be in such a position that the circular rim which provides mounting means, will extend from the sump portion, which is the depression in the cover casting, toward the cylinder casting, thereby bringing the area occupied by the entire mounting flange substantially within the confines of the area of dimensions of the main cylinder crankcase casting. So that as Claim 8 indicates we have a large mounting area without greatly increasing the outline of the engine, which is important.

Claim 1 of the Lechtenberg Patent -789, referred to before as the first Lechtenberg Patent—May I just point out that the form of this claim is not the ordinary form,

Page of Transcript

240 is not in the ordinary form; that is, in the ordinary form of claim, Your Honor, probably recalls, there is what might be referred to as a catalogue of elements. The structure is defined by a series of elements, one after the other. This claim recites those elements of the Lechtenberg invention—of the Lechtenberg engine which are essential to bringing about or to providing the necessary foundation area that characterizes the invention, consequently the claim is in this rather unusual form. It is not unusual in German and British practice, but is rather of recent form in the U.S. practice. So the claim reads: "A single cylinder internal combustion engine having a crankcase with two spaced apart side walls, each of which carries a crankshaft bearing." The sidewalls of the crankcase in the engine represented by the Exhibits 16a, -d and -c and -e, and which respectively are the Briggs & Stratton Engine and the Clinton Engine. You will notice each of those side walls carries a crankshaft bearing. The relationship that I have already expressed, that of a crankcase having spaced apart sidewalls is, of course, depicted and shown in the chart by virtue of its
241 illustration of the main cylinder and crankcase and the cover casting, one above the other in each of the two opposite side panels. The claim continues: "A cylinder" — and this is still referring to the element that the internal combustion engine has — "a cylinder and a crankshaft journaled in the bearings with its ends projecting from the crankcase." The cylinder, of course, on the chart is identified by the numeral 1, and the crankcase by the numeral 2. The ends of the crankshaft are adapted to protrude both above and below the crankcase when that crankcase is arranged with its cylinder horizontal. The claim continues: "One end of the crankshaft having

Page of Transcript

a flywheel mounted thereon, and the other end being the power take-off end of the shaft." That, of course, is the conventional construction, one end of the crankshaft, the flywheel is attached to it, and the other end constitutes the power take-off end. And in the engines we are here concerned with, if the cylinder is horizontal and the crankshaft vertical, it is the upper end of the crankshaft which carries the flywheel, and the lower end constitutes the power take-off end. Now, the claim goes on to state, that, "the cylinder and all portions of the crankcase including the wall thereof remote from and facing the cylinder, except that wall of the crankcase
242 which carries the bearing for the power take-off end of the crankshaft is a single casting." That fact is also expressly in Claim 6 and is identified by the numeral 5 and the red color and, of course, it is found in the upper pictures or photographs in the right and left-hand panel. The Claim goes on to say that the engine is – that the invention is further characterized by the fact that "said wall of the crankcase which carries the bearing for the power take-off end of the crankshaft is provided by a cover removably secured to said casting." Now, that cover is the element 6 of Claim 6 and is identified by the green color in the chart. Now, the Claim concludes with the statement which seems to me is all important, and that is, that "said cover is interchangeable with others of different design to adapt the engine to any of a variety of different installations without necessitating alteration of the cylinder-crankcase casting." And that is characteristic of the Lechtenberg Engine and as well as for the Defendant's VS100 Engine. And in my estimation this characterizes the difference in the engine from what went on before. It is the thing that has made possible

Page of Transcript

the accumulation of all of the constants — all of those parts of the complete engine which do not change from
243 one adaptation to another, all in the one main cylinder crankcase casting, which is the most expensive part and most expensive to produce, all of this constantly in that one engine, and all of the variants needed to adapt the engine to a wide variety of appliances.

Claim 2 is directed to the same general structural relationship set out in Claim 1, but in more specific language, and applies to the Defendant's VS100 Engine as follows: The claim calls for "A single cylinder, four-stroke cycle internal combustion engine having a crankshaft" — which, of course, every engine has — "a camshaft parallel to the crankshaft." That preliminary relationship between crankshaft and camshaft is, of course, present in the Defendant's VS100 Engine. The claim goes on with a recitation of a cylinder and a crankcase — which all engines have — "through opposite walls of which" — and "which" has reference to the crankcase — "the ends of the crankshaft pass." That relationship is
244 obviously present in the Clinton VS100 Engine. "One end of the crankshaft having a flywheel thereon and the other end being the power take-off end of the crankshaft." That, as brought out in connection with Claim 1, is the relationship in the Clinton Engine as well as it is in the Lechtenberg Engine, the flywheel being at the upper end of the crankshaft when the engine is operating with its cylinder horizontal and the power take-off end of the crankshaft being directed downwardly. The main characterization of the claim now continues with the language defining "the cylinder and all portions of the crankcase including the wall thereof remote from and facing the cylinder, except that wall of the crankcase

Page of Transcript

through which the power take-off end of the crankshaft passes is one casting." That is a factor present in the Clinton VS100 as well as it is in the Lechtenberg Engine. The claim then goes on to say that the wall "through which the power take-off end of the crankcase passes is provided by a cover removably secured to said casting." And that is the removable cover 6 in the chart to which the color green has been applied; and by chart I have reference to Plaintiff's Exhibit 5. The claim goes on to say that the invention is characterized "by the fact that
245 the crankshaft and the camshaft are supported by said cover and the wall of the casting opposite the cover; and by the fact that the supports for the camshaft comprise wells in the cover and said opposite wall of the casting." These two features are definitely present in the Clinton VS100 Engine, and is a last feature or element of the claim which identifies the supports for the camshaft which are known as wells, which will be seen in the line which has the purple colored circle No. 8 in both the left and right-hand panels of the chart, and extends to the top wall and is a boss which is drilled and is provided with a downwardly extending wall upon which it is attached.

Claim 4 is another one of those dependent claims. It is dependent upon Claim 2, so that all of the structure recited in Claim 2 is a part of Claim 4. But Claim 4 further identifies the invention by stating that it is "characterized by the fact that said cover has a relatively deep depression in its inner face so that when the engine is positioned to operate with its cylinder horizontal and said cover at the bottom of the engine, the depression in its inner face provides an oil sump." It has the same structural relationship which is expressed in Claim 6

and is depicted on the chart by the color brown — the
246 brown color applied to the claim 6 and also to the photograph. The claim further characterizes the structure previously recited in Claim 2 by stating that the cover has a boss projecting from its inner face and bored—that is, the boss is bored through to provide a bearing for the adjacent end of the crankshaft. The claim continues: "Said boss extending for substantially the full depth of the depression in the cover so that oil in the depression rising to a level substantially equal to the full depth of the depression, when the engine is used with its cylinder horizontal, will not drain out along the crankshaft when the engine is idle." That boss is the portion depicted in the Chart, Plaintiff's Exhibit 5, to which the line leading from the numeral 9 leads, and which in the chart is identified by the yellow color. Perhaps it is not clear from the chart alone, but it is a fact, as evident from an examination of Plaintiff's Exhibit 17b that the top of that boss which has just been referred to and which provides the bearing for the lower end of the crankshaft, is on a common plane with the edge of the depression. It is also true of the Defendant's cover which is in evidence as Plaintiff's Exhibit 16d.

247 Claim 5, after it recites the usual complement of structure and elements of an internal combustion engine, and by that I mean you supply — the crankshaft, the camshaft, and the crankcase, it goes on to characterize the structure in this language: "That all portions of the crankcase except its bottom wall through which the lower end of the crankshaft passes is one casting." That has already been established as being a fact in the VS100 Clinton Engine as well as in the Lechtenberg Engine. The Claim continues with this definition of the structure:

Page of Transcript

"By the fact that the bottom wall" — and we here have reference to the bottom wall of a crankcase — "comprises a cover having a relatively deep depression removably secured to the casting with the edge of the depression joining the casting on a plane parallel to said top and bottom walls of the crankcase and below the cylinder, by the fact that the camshaft is supported by the cover and the top wall of the crankcase and the bearings for the crankshaft are in said cover and the top wall of the crankcase." Its structural relationship also has been definitely shown to be present in the Defendant's VS100
248 Engine as that is depicted for instance in the right-hand panel of the Chart, Plaintiff's Exhibit 5. The Claim also defines the structure by this characterization, namely, that "the depression in the cover provides an oil sump and has an oil filler port therein communicating the depression below the top edge thereof with the mouth of the filler port on a level no higher than the edge of the depression so that the level of the oil in the sump will not be above the edge of the depression." The oil filler port to which the claim refers, is easily seen — readily seen in the pictures of the cover casting in the left and right-hand panels of the Chart, and is the threaded opening at the upper edge portion of the cover casting depression as that is portrayed in the pictures in the left and right-hand panel of the Chart, and in the physical exhibits 15b and 16d respectively. The filler is at the left of those physical exhibits as they appear on the panel in the courtroom. The top of those filler portions is an extension of the upper edge of the depression, and for this reason the oil poured into the filling port all the way to the top thereof will not be at an elevation inside of the sump higher than the top edge or opened edge

Page of Transcript

249 of the depression, which of course fits against the adjacent side of the main cylinder crankcase casting and is sealed thereto by a gasket. The claim further continues: "said cover being further characterized by a pair of bosses projecting up from the bottom of its depression, one of said bosses being bored through and providing the bearing for the lower end of the crankshaft, and the other boss having a well, closed at its bottom extending down into it and providing a support for the lower end of the camshaft." These bosses are identified in the Chart by the numerals 8 and 9. Boss 8 provides a support for the camshaft and though not evident from the illustration and the chart, is closed at the bottom, as can be ascertained by reference to the physical exhibit 16b and 16d. The Claim concludes with the statement that "the boss providing the lower crankshaft bearing extending substantially to the level of the edge of the depression in the cover so that when the engine is idle the oil in the sump will not be drained therefrom through said crankshaft bearing." That relationship has already been described in previous claims and is obviously present in the Clinton VS100 Engine as well as in the Lechtenberg Engine.

Claim 14 I believe is the next up. This claim is con-
250 cerned with another aspect of the Lechtenberg invention. It reads: "In an engine of the character described: a cylinder and a crankcase formed as one casting, the crankcase being open at its bottom." That element of the claim is, of course, the communicating cylinder and crankcase of the Clinton Engine and also of the Lechtenberg Engine. Going on with the claim we find it calls for "a cover closing the open bottom of the crankcase, said cover having a depression therein providing an oil

Page of Transcript

sump for the engine." Now, here we find the structure of the cover being defined so as to provide a relatively deep depression, which is clearly portrayed in the chart. The claim continues with the recitation: "Bearings for the crankshaft of the engine carried by the cover and the wall of the crankcase opposite the cover." In the Chart these bearings are identified by the numeral 9 and the color yellow. The claim continues with the recitation that the cover has "an oil filler port provided by a well extending down from the top of the cover alongside the depression in the cover," and states that "the top of said well providing the mouth of the port and lying substantially on a plane with the top edge of the depression." This same filler port, called for in Claim 5 and which in the illustrations of the Chart appears as
251 having the internal thread at the back or upper wall of the — of the cover — of the box. The claim further defines the cover as "having an oil drain port in its bottom provided by a bore parallel to the oil filler port but lying between said port and the adjacent wall of the depression." It might be well to identify these elements of the claim by reference to the numerals of the Lechtenberg Patent '789. The oil filler port is designated by the numeral 35 in Fig. 5 on sheet 4 of the drawing. And also in Fig. 9 on the same sheet of the drawings. The drain port called for by the Claim is identified by the figure 36 and can be found in Fig. 9 on sheet 4 of the Lechtenberg Patent drawings. The Claim states that the oil drain port lies between the filler port and the adjacent wall of the depression. And this relationship, though illustrated in Fig. 9 of the Lechtenberg drawing, is perhaps better appreciated by reference to the physical Exhibits 16b and 16d. The Claim further provides that the drain

port communicates with the filler port to thereby communicate the filler port with the interior of the depression. In other words, the claim sets out the relationship whereby the drain port extending upwardly from the underside of the cover casting between the filler port and
252 the depression which provides the oil sump establishes communication between these two, that is, between the oil filler port and the depression or sump. And the claim winds up the recitation of the removable caps for closing both the oil filler port and said oil drain port.

Claim 15 is dependent upon Claim 14 and defines over and above Claim 14 by calling for "the provision of a boss projecting from the bottom of the depression in the cover, said boss being bored through and providing the bearing for the lower end of the crankshaft and having a height to reach substantially to the level of the mouth of the filler port so that oil in the sump can not drain out through the lower crankshaft bearing when the engine is idle." That relationship of the boss which provides a bearing for the lower end of the crankshaft, has already been discussed and it is clearly evident in the photographs on the Chart and also in physical Exhibits 15b and 15d.

Claim 16 is an independent claim and reads: "A single cylinder, four-stroke cycle internal combustion engine having a crankshaft," — and I might shorten it by saying it calls for the usual elements of the
253 engine, the commercial engine, and then goes on to say that the engine is characterized by the fact that it is so designed to be used with its cylinder horizontal, with a crankshaft passage provided through the top and bottom walls of the crankcase. So that the flywheel is ad-

Page of Transcript

jacent to the top wall and the power end of the crankshaft projecting downward from the bottom wall. And further "by the fact that the cylinder and all portions of the crankcase including the wall thereof remote from and facing the cylinder, except the bottom wall through which the power take-off end of the crankshaft passes is one integral casting." This structural relationship expressed in the claim thus far clearly finds response in the Clinton VS100 Engine. The claim continues with the recitation that the "bottom wall is provided by a cover removably secured to said casting," which fact has also been satisfactorily established. Then the claim goes on to state that "the crankshaft and the camshaft are supported by said cover and the top wall of the crankcase." This structural relationship in the Clinton VS100 Engine is also clearly present, as reference to the right-hand panel in Chart, Exhibit 5, will show. The claim further states that the cover "has a relatively deep upward opening depression which provides an oil sump,"
254 a fact already established. And concludes with the characterization that "the cover has a boss projecting upwardly from its inner face and bored through to provide a bearing in which the lower end of the crankshaft is rotatably supported"; which is a fact in the Clinton VS100 Engine, as well as in the Lechtenberg Engine, and states that said boss extends "for substantially the full depth of the depression in the cover so that oil in the depression rising to a level equal to the full depth of the depression will not drain out along the crankshaft when the engine is idle." And that relationship has already been shown to exist in the Clinton VS100 Engine.

The Clinton Engine, as represented by Plaintiff's Exhibit 13 and as represented by Exhibits 16c and 16d and

Page of Transcript

by 18a, does find a full and complete response to each of those claims 1, 2, 4, 5, 6, 7, 8, 14, 15 and 16 of the Lechtenberg Patent 2,693,789.

* * *

274 *Cross Examination*

292 The two contacts of the Madle Patent are defined in
293 Figure 4 by the numeral 30, which designates the stationary contact, and by the numeral 29, which is the specific point of the Madle contact, but which actually is part of the arm, or fixed solidly thereto, the arm 28, so that together the arm 28 and the point 29 in my estimation constitute the movable contact. So I consider the part that Madle calls his contact carrying arm the contact. I think we have perfect liberty to do that, because when you buy a set of points for your automobile ignition system you don't get just the specific tips. In interpreting that claim I have not departed from the specification to such an extent as to preclude it. I wouldn't say that I was departing from the specification as written in that patent. You have a contact designated by the numeral 29 in Fig. 4, and you have got a contact carrying arm 28. Now, I say the arm and the contact make the contact here. In that respect I wouldn't say
294 it was departing from the specification.

Pointing out the elements of the Madle disclosure which are embodied in claim 5, without using the chart —The first specifically recited elements are introduced in the claim by the language: "Fixed and movable breaker points accessibly mounted on the exterior of the engine remote from the magneto." Now, those parts are the contacts 28 and 29 and my interpretation includes the
295 arm. The part designated 30 in Figure 4, and the parts designated 29 and 28. Going on, the claim next specifies:

Page of Transcript

"a cam follower movably supported by the engine remote from the breaker points." That you can probably see better in Fig. 6. The cam follower has the numeral 36 applied directly to it, and that portion of 36 which actually rides on the cam is a part of the member 35, and to establish the definition with relation to its mounting I think the claim states that—yes, the "cam follower movably supported by the engine remote from the breaker points," which, of course, it has. It is movably supported, and it is remote from the breaker points; and this I consider a very essential element or portion of the claim, this remoteness in the location of the cam follower and the breaker points—. The next element is "a motion transmitting connection between the cam follower and the movable breaker point such that separation of the points is effected by motion of the cam follower in one direction." Now, that connection is the shaft 27 which connects the cam follower comprising the
296 arm 35 and the extremity thereof, 36. I am looking at Figure 4 particularly. You will notice that shaft 27, as I have said has the arm 35 securely fastened to it at its right-hand end; and at its left-hand end has the movable contact comprising the arm 28 and the point 29 fixed to it, so that by virtue of this shaft 27 you have a connection between the cam follower and the movable breaker point. And because of that connection motion of the cam follower in one direction will effect motion in the same direction on the part of the movable breaker point.
297 Because the cam follower is fastened to the shaft 27 and the structure is so arranged that the cam-produced motion of the cam follower imparts rotation to the shaft 27, and because the movable breaker contact is also secured to the shaft 27 it will partake—I mean, the movable

breaker contact will partake of such circulatory motion of the shaft in the same direction as the movement of
298 the movable cam follower. The next element of the claim is "a rotatable part adjacent to said cam follower." That rotatable part is the large gear 38 in the Madle Patent drawings,—. And when I apply that claim to Plaintiff's structure I apply that claim to mean this gear, and all portions thereof. This shaft sticking out from the side is not a gear in the sense its function is not part of the mounting the gear, it has nothing to do with the gear. The next element of the claim is "a driving connection between said rotatable part and the engine crankshaft whereby the speed of rotation of the crankshaft
299 determines the speed of rotation of said rotatable part." The driving connection, of course, is provided by the meshing gears, or more specifically by the teeth upon the gears 38 and 39 in the Madle drawings. The next element of the claim, "a member carried by said rotatable part for rotation therewith and for motion relative thereto in response to centrifugal force," in the Madle Patent is identified by the numeral 45 in Figure 7, and all parts fixed to that member 45, which in Figure 7 is shown to have a crescent-shape, so that all parts of that member and that structure, or separate parts connected to it, move in response to centrifugal force. The member carried by the rotatable part is identified as the weight 45 and all of the structure fixed or connected or secured to it. I have particular reference to the rather arcuate-shaped piece of metal which is secured to the weight medially of the ends of the weight, and overlies that face of the web of the gear opposite that at which the weight
300 proper is located, and it has a stop and bumps formed on it to limit the motion of the assembly comprising the

Page of Transcript

weight 45 and this piece of metal fixed to it to predetermined limits. And this particular piece of metal 37 or the numeral 37, is applied to it in Figure 8, also of course, has the cam surfaces formed on it. The part having stops is the cam plate 37. We are now down in the part of that claim to this conclusion, that the member carried by the rotatable part means the weight 45 and the cam plate 37. That is the movable member that is secured together. The next element of the claim, "a cam surface on said member engaged by said cam follower for imparting motion to the cam follower in said direction once each revolution of the rotatable part to effect breaker point separation at instants depending upon the speed of the crankshaft rotation and the position of said member relative to the rotatable part as determined
301 by the centrifugal force acting on said member." Now, the cam surface is the inclined face of the plate 37 to which in Figure 6 the numeral 37 double prime is directed. That is the cam surface, or is part of it. That actually is identified in Claim 7 of the specification as the trailing end of the cam. And the leading end by the numeral 37 prime. In other words there is an incline up and a decline down to the surface. And both of those inclines are the cam surfaces called for in the claim.

Examining Defendant's Exhibit D-14, the shaft, of course, is formed of an entirely different metal than the gear. It has been apparently press-fitted into the gear. And while, therefore, prior to assembling it is not part of the gear, in the end result the total assembly is a part of the gear for some purposes, in my estimation, making this observation: in the absence of the projection of the shaft from the smooth face of the gear there would be no boss to space the gear from an adjacent operating end,

Page of Transcript

and that, of course, such would not be necessary
302 but it might be necessary. The short end of the shaft projecting from one face of the gear in Defendant's Exhibit D-14, in one sense forms part of the gear and in another sense does not. It is not the same metal as the gear. Functionally it might be part of the gear. I think it depends upon the purpose of the consideration. In what sense are we speaking? I doubt if you can place, upon the testimony I have given, the inference that when you consider the Plaintiff's construction, the shaft does not form a part of the gear, but when you are considering the Defendant's construction the shaft does form a part of the gear. Would
303 it make any difference if the whole were carved out of one metal? I don't think so, and particularly not functionally, as the function of the rotatable part called for in the claim requires interpretation of that element. I
304 think my testimony with regard to the Briggs & Stratton, the one was as I applied the element, the "rotatable part" of the disclosure of the Madle Patent, that it was the gear and all parts thereof which would, of course, include the hub of that gear, and whether that hub was made as an integral part of the casting or a separate piece secured to it, it is none the less a part of the gear and a part of the rotatable part. And I think I was careful to say that the member carried by the rotatable part in the Madle Patent and in the Briggs & Stratton structure is the weight and the piece of metal—that arcuate piece of metal which has the cam surface mounted on it. They are two separate pieces that have been solidly secured together and as a result they constitute—move
305 in unison in response to centrifugal force. And in the defendant's construction exemplified by Plaintiff's Ex-

Page of Transcript

hibit 21c, the member which is carried by the rotatable part is the weight and the collar which is rotatably supported by the hub portion of the gear. These two elements are joined together in such a way that they are constrained in the operative condition of the mechanism to move in unison in response to centrifugal force. The cam surface is not upon the weight in the Madle construction, but is on a part connected to the weight, and in the Defendant's construction the cam surface is on a part, specifically the collar journaled on the hub of
306 the gear which is connected to the weight. In the physical Exhibit Plaintiff's Exhibit 21c, that member is the weight plus the collar which is mounted on the boss. You may call the collar the cam gear's sleeve, if you like; I call it the hub of the gear. Together they comprise the member, and together, of course, they rotate with the gear which is the rotatable part, and also they
307 are both movable in response to centrifugal force. They are also both movable in response to centrifugal force; and I think, before, I pointed out they were so connected that they were constrained to move together in response to centrifugal force. Centrifugal force acts upon any object having a mass rotating about a defined axis, and it acts outwardly from that axis. And when it flies off tangentially that is, the mass would move out tangentially. The phrase is, I think, outwardly. It is a force moving outwardly, tending to move weights away from the center. I do not say this cam member, sleeve or collar as you call it, responds to centrifugal force. I say that together with and by virtue of its connection to the weight, it must respond to it, it must move. In the light
308 of that statement I do not want to change my statement that sleeve or collar responds to centrifugal force, but

Page of Transcript

I would like to add to it. I would like to point out that the motion which is imparted by centrifugal force to the collar is arcuate, rotatable about the axis of rotation, and so is the force which is applied to that member of the Plaintiff's structure upon which the cam surface is located. There is functioning in Plaintiff's Exhibit 21c
309 a force which brings about rotation of this collar or sleeve, other than the force that I have been talking about—the spring. In one direction, opposed to that produced by centrifugal force. And friction may be tending to rotate that sleeve or collar in the other direction. Friction is not a moving force.

In the Lechtenberg Patent '789, Claim 1, the subject matter of the first nine lines, down to the colon, cannot be disregarded in determining if the claim is satisfied by any given structure, whether we approach the question from the standpoint of anticipation or infringement. There-
310 fore, it is part of the claimed structure. I don't believe there is any intention that cooperative relationship between the flywheel and the crankcase should be expressed or inferred.

Claim 4 depends upon Claim 2. Claim 2 has a relationship to Claim 1. The elements set out in the first seven lines of Claim 2, down to the colon, are a part of the claimed structure to the extent that the recitation
311 of those elements is essential for completeness and for the sake of understanding, so that the structure thereafter following in the claim can be properly coordinated to a complete unit. That coordinated part of the claimed invention appears in Claim 2. The subject matter of the first seven lines of Claim 5, ending at the colon in line 8, is a part of the claimed structure, but when you introduce that in the claimed invention that perhaps induces another question. You write a claim to define the in-

Page of Transcript

vention and distinguish it from prior art, so that those concerned with the question of whether or not they infringe the patent can determine that question. And you
312 have an introductory clause in practically all of these claims setting out practically the same parts, that is part of the claimed structure in those other claims, too, as it is needed for antecedent purposes. Wouldn't it be obvious that the recitation of that structure, which in itself
313 may be without characterization, would be meaningless? It is an essential part of the claim in the sense that the claim attempts and does define the invention and although the recitations of those structural elements is necessary for the claim to properly characterize what the invention is.

The Court: As I understand it, it doesn't mean what is stated therein constitutes the invention.

The Witness:

That's right. This is not a conventional type of claim, as I said on Direct Examination, and which I think you recognize. The invention in this particular case is in the—real invention is not susceptible to the convention claim—to definition by a conventional claim as well as it is by a "characterized by" type of claim—. I don't mean you cannot point out a distinguishing claim of invention.

314 Now, in Claim 1 I said forming a part of the claim was a single cylinder internal combustion engine having a crankcase with two spaced-apart sidewalls. That is not part of the Lechtenberg invention. A recitation of that structure is essential to a definition of the Lechtenberg invention. I think the Lechtenberg invention is very aptly expressed in Claim 1, wherein it is stated and defined that the invention—the real invention here involves or rather consists in the concept that the unitary

Page of Transcript

315 cylinder and crankcase casting—the one piece cylinder and crankcase casting, which the claim defines as including all walls of the crankcase save that wall, all except that wall, through which the power take-off end of the crankshaft extends, is one integral casting, and that the remaining wall of the crankcase is provided by a cover casting, and that by virtue of its relationship—its structural relationship, all of the constants of the engine—all of those parts of the engine which form one adaptation or use or purpose to another are embodied in the one unitary main cylinder crankcase casting. Then all of the variables which add—which form one adaptation or use of the engine to another, are and can be incorporated and embodied in a far less expensive cover casting. The thing I am trying to state, Your Honor, is that we have one main diecasting, which in itself includes—

316 *The Court:* Is the one unitary casting—integral casting, involved in the invention?

The Witness:

No, not that; but arranging that casting in such a way or, rather, constructing it in such a way that the line of separation between it and the cover casting occurs where it does so that the power take-off end of the crankshaft protrudes through the cover casting, and all of the rest of the engine is carried by and is mounted on the more expensive unitary cylinder crankcase casting. It is that concept which enabled Lechtenberg to achieve, and it gave Lechtenberg the invention from which all of these unexpected new results, from which all of these unexpected advantages flow.

Prior to the filing of the Lechtenberg Patent there were crankcases and cylinders cast as an integral unit.

Page of Transcript

And in those engines one side wall of the crankcase was open, as shown in Defendant's Exhibit D-9. And that
317 side was closed by a cover plate. Now, that cover plate could be removed from the crankcase without disturbing the internal mountings of the structure therein. And if you desired you could replace that cover plate with a different size or shape of cover plate as long as you had the necessary bolt holes located for securing it on the crankcase wall. But that is not the invention claimed.

Q. That is true. Just answer the question. That you and Lechtenberg knew all about before filing the Lechtenberg application resulting in Patent No. '789, but instead of cutting off the side wall of the crankcase directly opposite the cylinder, to close that with a cover plate you cut off one of the other sidewalls and left this wall directly facing the cylinder integral with the crankcase. Now, that was the change that was made, wasn't it?

A. Not just one of the other side walls.

Q. That was the change that was made, wasn't it?

318 A. I cannot answer that yes or no, not just one of the sidewalls, but the side wall through which the crankshaft entered the—. I will agree that instead of having the side of the crankcase directly opposite the cylinder open, that side was made closed and the side of the crankcase through which the power take-off end of the crankshaft projected, was left open, and enclosed by a cover plate.

* * *

328 DEPOSITION OF ARTHUR J. EATON

Mr. Jones: I stipulate that this man purchased the lawn mower, Exhibit D-2, from the Baldwin Hardware Company in April, 1948.

The Witness: I have been using that since.

• • •

330 DEPOSITION OF GEORGE ROSE

Direct Examination

George Rose, 53 Sand Lake, Onsted Michigan. Age 33, occupation, Superintendent in Die Cast. Engaged in die cast work since 1937. My duties as Superintendent of the Die Casting plant here are to take and get production out, design dies, help design dies, to make particular castings which we want. I am now working for Clinton Machine Co. I have been engaged in the
331 die casting business since 1937. I know die casting from A to Z. I run the machine; I file the castings. I process them. I have worked as a tool and die worker—I mean I did everything as far as the die casting industry goes. I have been in the die casting work since the latter part of 1936 and 1937. I started out as a common laborer, I mean, filing castings. I worked my way up.

I have seen a structure like Exhibit D-3 before. You
332 see, I went to work at PEMCO. That's the pen name for Product Engineering and Manufacturing Corporation. I was Superintendent, well, general foreman and later Superintendent in their Die Cast Department and we run this job there. That is located in Bridgman, Michigan. I went to work for them, I believe, in the latter part of 1950. The only way I can fix it is 1951, I bought a new car while I was working there and in 1949, well, 1950, we had a bad strike at the Benton

Page of Transcript

Harbor Malleable Industries, and that's where I got tied up with Bridgman. They had run this Exhibit D-3 prior to my time of coming there. The die was going in and out of the machine. Actually, it was 1951 when I
333 actually run it myself or had it run, set up and run. When they were run at the plant at Bridgman, Michigan, they were sent to Pioneer, General Motors. I would be sort of guessing, but I am positive it was in Chicago. We always called it an oil pan. On a lawn mower — the
334 little motor on a lawn mower. On the engine for a lawn
335 mower. The name of the company that these bases, such as shown in Defendant's Exhibit D-3, were shipped to was Pioneer, Gen-E-Motors Corporation, in Chicago. Have I ever seen an engine with that kind of a base on it? Well, I actually really can't say yes or no to that. I think I have. I mean if I flatly stated that I did, I wouldn't be positive. There is a base on that engine Defendant's Exhibit D-2 corresponding to the structure of Defendant's Exhibit D-3. It is the same thing. I would say that it was identically the same as this. I have examined Defendant's Exhibit D-1, and I find there a base corresponding to Defendant's Exhibit D-3. I would say it is identical to that. Page 20 of Defendant's Exhibit D-4 and particularly, the part which is numbered 60-206, resembles the structure shown in Defendant's Exhibit D-3. The same thing. When I was working at the plant there in Bridgman, running die casting such as Defendant's Exhibit D-3, they were running a similar structure with modifications. They had a similar casting as this, refer-
337 ring to Defendant's Exhibit D-3. They had a similar casting to this, which, after I was there for a while, found out that it supplemented this. In other words, it was a little longer, a little narrower, practically the same

thing. By "this", I mean Defendant's Exhibit D-3. The only thing it differed, it was longer this way (indicating): It was shallower. It only came about thusly. This core (indicating) was here in the center (indicating). It came out h e (indicating). It was practically the same thing, only easier to run, I would say. This core (indicating) comes through. It was used as a ratchet and this core was practically like this (indicating). It
338 was all automatic. The core that I was referring to was this core here (indicating). It comes out of the die here and this core here (indicating) was a rack out deal that come through the ejector part. Well, it is a core that comes down through here (indicating). It is long and in order to pull it on this angle, it has to be — to get it out — it had to be hand operated, which made the casting rather hard to run, but what it did, it saved an operation, as far as the cleaning was concerned. That core formed a passage after the die was cast. Actually, the goldarned thing is right vertically to the base of the structure which is Defendant's Exhibit D-3. Now,
339 the core that I referred to is at one side of the structure, D-3. It will come vertically with this surface which I term the top. In the illustration, identified as 60206, appearing in Defendant's Exhibit D-4, there is a similar core on that structure. It looks like that extends at the same angle as the core on Defendant's Exhibit D-3 ex-
340 tends. In this Defendant's Exhibit D-3, you have a passage extending downwardly from one side, the upper end of which is threaded. Those three are not present when the structure is cast. They are machined in afterwards. You also have on one side of the structure an opening which is threaded. That opening is used probably to fill it with oil or drain it. This passage which

Page of Transcript

extends along one side wall breaks through the side
341 wall at the bottom. That is accomplished through this core coming down from this angle and kissing off, touching this core here (indicating) and sealing it off, not leaving any metal get through here, and when this core is pulled, this is ejected off of the large core. You have got an opening. Considering the open side of this structure the top side, and the closed side, the bottom, this core extending angularly downwardly extends from the top to the bottom. Also, you have a core coming
342 in here (indicating). It is right vertically with the bottom. It goes through the bottom. In forming that opening, it was formed by means of a core. Now, you had a passage coming up through the bottom or a core coming up through the bottom to form an opening and you had another core running diagonally downwardly from the top. Those cores when they were in position prior to casting, are interlocked. They are sealed right off. They are right together. They contact each other.

Defining the term "kissing core", whenever you want
343 something to seal off, not have any metal or any flash around it, well, we bring the cores up and kiss them together so they are right. I mean contact them togeth This structure shown in Defendant's Exhibit D 3 w pro-vided with kissing cores to form these passages that we have been talking about. In Exhibit D-5 I find evidence that when it was cast, kissing cores were used. In that
344 structure, the cup portion is in the ejector die. And it is a core. It is a round place that fits right down in here (indicating). And then, there is another core this way (indicating). Coming in from the bottom and on the side of the structure. And that comes down in there and just rides on this portion here (indicating), just enough

so that it won't gall, and enough so that the metal will not fill in there, leaving an opening. It is a common practice in die casting to use kissing cores in order to establish a communication between the two passages. We have used it ever since I have been in it. I mean, in dies that were made before I even got into the die casting end and knew exactly the finer points. It was used previously to that. It has been used ever since I can remember. That was commonly used when I went to work for that Bridgman Company in 1950. It was com-
345 mon practice at that time. This die had been running before I even came there because I used to squawk about it. I am speaking now about Defendant's Exhibit D-3.

• • •

347 Now, in Defendant's Exhibit D-6 there is a communication between that filler opening and the drain opening. That was formed by the use of cores coming together and sealing off. They will come right in there and kiss off and seal. It is the use of three cores. We had kissing cores to form that structure. That practice of forming that communication is practically the same thing as the practice used in constructing Exhibit D-5.

• • •

349 When we are making a die cast out of aluminum and we are casting a boss projecting upwardly from the base,
350 it is customary to reenforce that boss with those ribs. Actually, what happens on these goldarned things, if you don't have these reenforcing ribs, you leave this in the die. It is hard to cast and you would have to have some support on this darn thing. When I speak of this "darn thing", I am speaking of this boss that is projecting from the base. Now, projecting from the side walls of Defendant's Exhibit D-6, you have ribs. Those

Page of Transcript

are used for reenforcement purposes or other purposes, to the best of my knowledge.

* * *

CLARENCE DAMON

Direct Examination

352 My name is Clarence Damon, 36 years old, I live in Tecumseh, Michigan, I am Assistant to the Chief Engineer of the Clinton Machine Company. I started working for the Clinton Machine Company in 1946. I stayed
353 there a few months, left, and returned in 1950, and continued there until — I am still there. My work varies widely from designing, follow-up, expedited drawings, even running blueprint machines occasionally, everything during the time I have been there, along with contacting die makers for die cast pattern makers, sand cast foundries, machine shops for machining, assembly problems, coordination of engineering of new products— I should say, with the production lines over in Maquoketa through our developments in Michigan. There is a multiplicity, they are hard to cover all at one time.

I know what is meant by the VS700 put out by the Defendant. I have seen that circular Defendant's Exhibit D-17 before. I have seen this particular circular as far back as my second employment with the company, 1950. It is the VS700 Engine. There was several different metals
354 in it, cast aluminum, die cast zinc, sand cast castings, iron blocks, steel stampings, there were plastics, rubber, many different materials in it. How many do you want to cover? We have a VS700 here. That is the same engine, except this is a later date. The one Clinton made in 1950, I don't know where it is, but that is it right there, D-8. D-8 is the same structure generally as the machine shown on Defendant's Exhibit D-17.

Page of Transcript

355 I am acquainted with the vertical shaft engine, which the Defendant, Clinton Machine Company, put out under the name of VS300. I have seen sheets like Defendant's Exhibit D-18 before. At Clinton Machine Company, Clinton, Michigan. There has been some changing in the face and coloring, and so forth, of the brochure sheet, but this one was issued in 1952, but the 300 engine goes back into 1950, I am positive. We have some older brochure sheets somewhere, but this is the newer brochure sheets. As far as I know, those sheets such as shown there, Exhibit D-18, circulated to the
356 trade as early as 1950. Clinton Machine Company manufactured and sold an engine VS300, such as illustrated in Defendant's Exhibit D-18. I have one at home on my lawnmower. The 300 was a smaller, lower horsepower than the VS700. It had a cast iron sump and mounting flange. It had an aluminum bearing plate, two separate cam gears, with tubes mounted in the aluminum bearings of the bearing plate — die cast aluminum bearing plate, incidentally. Let's see. It had a steel cover in the back instead of the aluminum cover as the
357 VS700 has. Otherwise it is practically a customary engine, one of our engines, the basic engine is still there. The mounting surfaces are different, I want to emphasize that, the mounting surfaces are different.

358 As to other model numbers of engines Clinton Machine Company puts out, currently we start with a 100. VS. We have the 200 in the VS, and we have the 300. That is the obsolete engine. We have a 400 VS. Incidentally the 300 is made both horizontal and vertical. And then
359 we have — I would almost have to have a catalogue sheet to tell me, because we have 490-some odd parts in there that are a little different, for example, that I can't

Page of Transcript

memorize them all. I can go through—400 of the—I think it is 490, I am not sure about that. I would rather forget it. We have 700, and 800 and 900 and 1100, 1200, 1600 and 2500. Now, those are the engines that we are currently —.

• • •

363 Defendant's Exhibit 21 is the 700 block. You cannot determine from this whether it is VS or horizontal. It is a piece of cast iron cut from the side of one of our engines, the 700 Model and showing the crankshaft boss and the back or blind bosses of the mounting holes, and the camshaft boss and clearance around its surfaces. Also, the oil filler in the oil filler boss is shown. Exhibit 21 is a photograph of the section which is cut away from physical Exhibit D-9. I had those thumbscrews put in
364 afterwards. Defendant's Exhibit 22 is the mating part which was sawed from D-21. That is the remaining portion of the Defendant's Exhibit D-9. Exhibit D-23 is the carburetor side view of the engine in D-20, or the VS700. Defendant's Exhibit D-24 is a diecast aluminum bearing plate assembly with breaker points, cam, condenser coil, throttle mechanism, and governor mechanism mounted, and fits on our chain saw engine, our VS200 and VS400 engine. Defendant's Exhibit D-25 is a diecast end cover for the engine in Exhibit D-20, which is the same engine as in Exhibit D-23. Also it will go on the VS800 engine. It takes the place of the cast iron base, when the engine is used as a vertical shaft.
365 D-26 is a photograph of the inside of the coverplate D-25. D-27 is a view of the engine in D-20 on the opposite end or what we would call the rear of the engine.

• • •

Page of Transcript

371 This separable plate, which forms a part of Exhibit D-9, was sawed off for the purpose of this trial. I wouldn't use the engine in that form when I am normally using it. I probably would have difficulty. It just wouldn't work.

* * *

BERNARD J. CANTOR

Direct Examination

376 My name is Bernard J. Cantor, age 28, my residence is 24753 Rensselaer Boulevard, Oak Park, Michigan, and my occupation is a Patent Attorney. I have a degree of Mechanical Engineering — Bachelor of Mechanical Engineering in Cornell University 1949. Degree of Juris Doctor from the George Washington University, Washington, D.C. in 1952. I have had experience relative to patents and patent prosecution of applications. From 1949 til 1952 I was employed by the United States Patent Office as a Patent Examiner. Subsequent to that I was employed by the Kelsey-Hayes Wheel Company of Detroit, Michigan as Patent Counsel. And in March of 1953
377 I went into the private practice of Patent Law. I am now associated with the Patent Law Firm of Cullen & Cantor of Detroit.

* * *

385 I understand what is the claimed subject matter of Claim 5 of the Madle patent. In my opinion the preamble sets forth the environment for the description of the structure of the actual so-called inventive subject matter. The invention or the claimed subject matter would begin after the colon on line 55 with the words "fixed and movable breaker points accessibly mounted —" etc.

Page of Transcript

I heard the testimony of Mr. Kohls when he was talking about the Lechtenberg Patent '789. It is my opinion that there is a preamble in claim 1 of the Lechtenberg patent '789, and that the preamble starts with the first
386 word of the claim "A", and continues—"single cylinder internal combustion engine—" down to line 78, ending with "—by the fact that:". So the invention or claimed subject matter which constitutes the invention, in my opinion, is the subject matter following the colon.

* * *

395 On page 4 of the Defendant's Exhibit 28 I have prepared a chart which is headed as follows: Defendant's Chart Showing *That Defendant Uses a Cam and Cam Mounting* —. On page 4 on the right-hand side of the page I have a reproduction of Figure 7 and Figure 4 of the Madle Patent. That reproduction was made by taking an actual copy of the Patent and blowing those figures up to double size, and then pasting them on a sheet of paper and reproducing them photostatically. I will compare Figures 7 and 4 of Madle with the device I am holding in my hand, Plaintiff's Exhibit No. 21c. The Figure 7 of page 4 shows a gear 38. The device which I am holding in my hand also contains or comprises a gear. The gear of Exhibit 21c is apparently
396 made in one piece with a shaft which seems to be a camshaft. Now, Figure 7 illustrates an arcuate arm or what I have labelled a centrifugal weight which is colored green in the chart. The Exhibit in my hand, 21c, shows an arcuate arm or centrifugal weight, which is a crescent-shaped object pivotally connected to the cam, and restrained from movement by a spring. Incidentally there also is a spring 47 shown in Figure 7 on page 4. Exhibit 21c includes a collar which is re-

movable and which slides over and apparently fits upon one end of the camshaft, which is formed in one piece with a gear. The collar is circular in shape and simply slides over the end of the camshaft. It is carried by the camshaft and is not connected in any way to the gear. Now, referring to Figure 7 of page 4, colored lightly in red, is the back side of the cam of the Madle structure, Madle Patent drawings, which I have labelled as a cam located on the surface of the gear and on the opposite side of the gear from the weight. You will notice that is colored lightly in red. In Figure 4 the cam surface is colored in red also. Now, the cam 37 colored in red on page 4, is permanently and securely connected to the free end of the arcuate arm 45. So that any motion of the arcuate arm will also move the cam. And the cam
397 will move apparently the same number of degrees or approximately the same distance as the free end of the arcuate arm moves also. Now, referring to the structure in my hand, Exhibit 21c, the cam collar at one end is provided with what looks like a bump or projection, and this bump or projection fits within a depression or slot coming out of the free end of the arcuate weight. As the arcuate arm or weight swings outwardly because of the centrifugal force of the rotation of this gear, the cam will twist a certain number of degrees around the camshaft. Now, it can be seen here that the motion of a collar type cam is limited to just a few degrees, whereas the motion of the red-colored cam in Figure 7 and Figure 4 on page 4 of Exhibit 28, will swing quite a bit.

* * *

399 So that the weight is restrained in its motion. Now, the movement of the cam of Exhibit 21c, which is the structure I am holding in my hand, is caused by a torque

Page of Transcript

which is imparted to what we call the horn, Your Honor. And that torque is a force which is placed upon that horn by the weight. Now, in this structure in my hand, as the cam rotates and as the camshaft rotates, centrifugal force tends to throw the weight outward from the axis of rotation. In other words, putting my pencil through the center of this camshaft, the weight tends to fly away from my pencil. Now, the arcuate arm or weight is pivotally connected with the gear so that only the free end can fly away from my pencil. Now, the only element in the structure of Figure 21c which is responsive to centrifugal force or which in any way is operated by centrifugal force is the arcuate arm. That is the only object which is free to move by centrifugal force. The cam could not fly away from my pencil because it is solid on the shaft. If it would fly away from my pencil it
400 would burst into a million pieces and fly outwardly. So the cam is moved by a torque caused by the motion of the centrifugal weight. On the other hand referring back to Figure 7 and Figure 4 of page 8, the cam there is rigidly connected to the weight and for all practical purposes might just as well be considered as part of the weight. Now, that circular weight colored green responds to centrifugal force and the free end of that weight tends to swing away from the blue section of that drawing, the blue section is the part that corresponds with my blue pencil. And, therefore, that weight is responsive to centrifugal force, and since the cam surface of the cam itself is rigidly connected to this circular weight you might say that the part which is the weight and the cam together are responsive to centrifugal force. Examining Exhibit 21c, I don't see any cam surfaces on
401 the arcuate arm. I find no cam surface on the arcuate

arm or weight on Exhibit 21c, which I hold in my hand.

402 I do not find in Plaintiff's Exhibit 21c a structure corresponding to the phrase in Claim 5, "a member carried by said rotatable part for rotation therewith and for motion relative thereto in response to centrifugal force." As I said before, there is only one element in the device I am holding in my hand, Exhibit 21c, which is responsive to centrifugal force, and that is the arcuate arm. That arcuate arm does not carry -- Isn't that the word used in the claim? A Cam surface responsive thereto. There is no cam surface on said member, and by said member I mean the arcuate arm. Considering the Madle disclosure, it is my opinion that by that phrase and the following phrase, "and a cam surface on said member," as set out in Claim 5, the Madle Patent means the weight or arcuate arm, which is designated at 45 in Figure 7, and the attached cam surface and cam element 37. That is all that shows in the patent that corresponds to that phrase.

• • •

405 In my opinion, the mechanism of Madle, involving the cam follower and cam follower arm 35, the shaft 27, the contact bearing arm 28 and the contact 29, cannot be substituted with the structure shown in Exhibit 21d. I might add to my answer, amplify it by saying there is a different operation in these two devices of 21d and Figure 4 of the Madle Patent. As I mentioned in describing the device, Exhibit 21d, we had a push rod connected to the follower. Now, that push rod abuts against a rocker. It is not connected with the rocker in any way, just pushes up against the bottom of the rocker, and apparently can be removed by just pulling on it. While in the Madle device the same elements are physi-

cally connected together, and physically moved together, because they are connected together. He has a shaft 27, which oscillates, and the oscillation of that shaft is due to the movements of the follower and the follower arm 35 as it strikes or is struck by the cam surface. The oscillation of the shaft 27 causes motion of the movable breaker arm 28, which is identical to the motion of the follower arm 35. And I think that is pretty obvious, because all three parts are connected together. In 21d there is no such type of motion. There is no oscillation.

406 This is simply a plunger which goes up and down in response to rises and falls on a cam and in going up and down presses up against a rocker, which rocker carries at its opposite end the breaker point.

• • •

409 The reason why if you have a sleeve or a collar on a rotating shaft it can't respond to centrifugal force goes back to where we were before. As I said, a centrifugal force is a force which is radial from the axis of rotation. If we have a rotating shaft which carries a collar, that collar is affected by centrifugal force to the extent that if it were made out of something like putty or clay, or something easily broken, it would fly apart and spread out in all different directions.

• • •

411 I wonder if I could direct the Court's attention to page 12 of Exhibit 28 in my book, and that is where I have prepared a diagram of the Phelon Patent in order to more easily give my opinion. The Phelon Patent is concerned with a means of advancing and retarding the the spark of an internal combustion engine. Now, Phelon

412 accomplishes his object of advancing and retarding the spark by fitting a collar or cam which is shown in red

on Figure 4, page 12. It is shown in red in Figure 4, Figure 2 and Figure 3, around a shaft which is shown in blue. Now, the cam, which is designated as numeral 24, is loosely fitted upon the shaft 25, and has a bump or flat portion which I think can be seen in Figure 2 and Figure 4, against which a breaker assembly is operated. Now, the breaker assembly consists of, if I have these numerals correct, a rocker beam 22, which is fitted upon a securing member 23, and which at its left side in the drawings carries a breaker point 20, which makes a breaking contact with a fixed breaker point 19. Now, the right side in the drawings of the beam 22 has a portion extending upwardly in the direction of the cam, and the cam is shown in red. Now, I have in Figure 4 shown a lead line and marked it FOLLOWER, which is the element I mentioned before, which contacts the cam and which causes the rockable beam to rock. Now, as the shaft 25 rotates the follower rides along the surface of the tubular cam, which is the same type cam, I might add, as seen here in Plaintiff's Exhibit 21c. Of course, the follower contacts the cam and gives the beam a rising
413 and depressing operation, in this case a flat portion, and the breaker points open. The problem Phelon was concerned with was in advancing and retarding the opening and closing of these breaker points. And he accomplished this by means of a circular weight which is shown in green in Figure 1 and in Figure 3. Those are the drawings on the right-side of page 12. You will notice that the weight is pivoted to a large circular element which in this case is a flywheel of the internal combustion engine. This flywheel rotates with the shaft 25. Now, the rotation of the flywheel and the shaft causes the weight which I mention as shown in green

Page of Transcript

to swing out into its dotted position shown in Figure 1. And as the weight swings out in response to centrifugal force the movement of the weight is translated to the cam; . d the means for effecting the movement of the cam consists of an arm which I show in yellow in all of the drawings and particularly in Figure 3 — that is the drawing on the lower right-hand side of page 12. This arm is connected at the fitted opening to — that is, numeral 2, to the centrifugal weight and goes through the flywheel 10 and has an upper end 8 which fits into a slot weight in the tubular cam 24. Therefore, it can be seen that movement of the green — I will refer to the
414 colors in accordance with my diagram — centrifugal weight twists the yellow arm, which in turn causes the round portion at the top of the yellow arm and causes the red cam to rotate a certain number of degrees relative to the blue shaft. Now, as it happens this blue shaft is the engine crankshaft. As it also happens the flywheel is a part of the magneto structure of an engine. But I think this Patent brings out *very, very* clearly a timing mechanism which in my opinion is substantially identical to the timing mechanism which I see in Plaintiff's Exhibit 21c. Now, the difference between the timing mechanism in 21c and in Phelon is that in 21c the weight and the cam are both on the same part of what I will call now a rotating part, which is the gear. I will just call it a part. They are both on the same side of a weight part. Whereas in Phelon they are on opposite sides of a part. In other words, the green weight is on the lower side of the flywheel and the red cam is mounted on the camshaft, or in this case the crankshaft, on the opposite side of the flywheel.

* * *

420 Referring to page 12 of my chart, Defendant's Exhibit 28, referring to Figure 4 which is the figure on the lower left-hand side of that page, I think it is apparent that the member which I have labelled as follower, with a lead line connected to the member, and to the word *Follower*, abuts up and rides along the surface of the cam which I have shown in red. I think it is clear from this drawing to which Figure 2 directly refers, there is no physical connection between the follower and the cam, but the follower simply rides along the surface of the cam.

As to whether in the Madle Patent the cam follower, the cam arm, the shaft 27, and the movable contact 29, and the contact carrying arm 28, constitute a unitary structure or a plurality of separate parts, that is a hard one to directly answer. They are apparently separate parts, but they are all fastened together rigidly, so they could all be considered as one element. I would say
421 they constitute a unitary structure. In Exhibit 21d the cam follower, the plunger, the rockable beam, and the movable contact, do not constitute a unitary structure. The plunger in Plaintiff's Exhibit 21d abuts up against the surface of the rocker, and there is no actual connection between the two. By two, I mean the rocker and the plunger. Examining Exhibit 21d, I would say that the cam follower is not connected with the movable breaker point or contact. By connected, the word connected to me means a physical fastening or a physical interlock of two parts. In this case I find no physical connection between those two parts.

* * *

424 Now, in my opinion the problem that Madle was concerned with could really be broken down into two

Page of Transcript

parts. The first part was that he wanted to get his breaker assembly — by breaker assembly I am particularly interested in the movable and the non-movable breaker points — into such a position on the engine where he could get to them in order to repair or replace them or in any wise adjust them. So that the first concept which I feel Madle was concerned with, was the concept I
425 have listed as No. 1 on page 1 of the chart Defendant's Exhibit D-28 that I have referred to. "To remove" — I am reading: "breaker assembly and advancing means from inside flywheel and to place them in an accessible place." The reason I say from inside flywheel was that in the Madle specification the specification talks about breaker points being inaccessibly mounted inside of the flywheel or the flywheel magneto, and that one of the objects of Madle's invention was to take these breaker points and put them somewhere else other than inside the flywheel where they would not be too accessible.

Now, the second concept or problem that Madle was concerned with was that of advancing and retarding the spark, and I have that listed as Number 4 on my list of concepts. Incidentally, I also have a Number 5 which follows Number 4 and really is part of Number 4, wherein I have written it: "To advance and retard spark by means of a centrifugal means." And beneath that I have: "(a) a cam operated by a weight, and (b) a follower operated by a cam to operate breaker points." Now, I think the two concepts or problems I have just mentioned can be clearly broken in half and be treated separately. The first concept is that of getting the breaker points into an accessible location on the engine. And for all practical purposes it has very little, and in
426 my opinion nothing, to do with the actual timing or

advancing or retarding of the spark. Now, the second problem is that of advancing and retarding the spark. And I think the spark advancing and retarding has nothing whatsoever to do with the location of the breaker points. Now, to diverge for a second I think Mr. Harkness said the other day, when I was listening, that the advancement and retarding of sparks was known in the distributor art in the automobile industry. Now, what I am attempting to do here is to show and to agree with Mr. Harkness, that the advancing and retarding of a spark by what I call a cam operated by a weight and a follower operated by a cam to operate breaker points, was very well known in the art, and it was known a long time before I was born. I think the second problem, or actually the first problem I mentioned before, that of accessibly mounting the breaker points, was also very well known in the engine art. And the combination of both concepts was well known in the engine art.

Now, leaving page 1 for a moment, I would like to show if I can a brief description or a brief resume of the various prior art patents that were relied upon by the patent examiner in the patent office when he examined this application, and when he allowed the Claim 5 and
427 the other claims in the Madle Patent. The reason I have reviewed these patents is that I want to show just what novelty Madle had there, what the examiner had on his desk by way of prior art patent copies. Now, referring to page 2 of my chart, Plaintiff's Exhibit 28, I show on the left-side of the chart a reproduction of figures 1, 2 and 5 of the patent to Kettering No. 1,463,958. Now, this was one of the patents which was cited by the patent examiner during the prosecution of the Madle application. Incidentally, I have only showed the first sheet of

Page of Transcript

the two sheets of drawing and part of the sheets—and not the drawings of the remainder of the patent because I don't think they are particularly pertinent here. I would like to point out that Kettering discloses—and this is listed below the Kettering Patent—: a single cylinder, four-cycle engine having a crankshaft driven magneto and a timer shaft operated at one-half crankshaft speed. He also showed normally closed breaker points, which caused a spark when opened, and which are accessibly mounted on the outside of the engine. Now, Kettering's timing cam was not adjustable, it was a fixed
428 type cam. Referring to page 10 of Defendant's Exhibit 28, I have set out in a little more detail just what it is that Kettering Patent 1,463,958 does. I made a separate chart on Kettering. Now, as I said, Kettering does not adjust or advance and retard his spark by means of an adjustable time cam, but I think if you will look on Figure 1 of the Kettering drawings it can be seen about the center of Figure 1 the word "Timer" appears. I didn't put that in, that happened to be on the Patent there itself. Now, that is the timer mechanism. And referring to the Kettering Patent itself I would like to read one of the objects of Kettering that refers to the timer mechanism. This object appears directly beneath the reproduced drawing of the Kettering Patent on page 10 that I have been referring to. Now, you will notice I have a list noted as Kettering's objects, as set forth on page 1 of the specification. What I did was, I actually cut up a patent and cut out these words from the specification and have them reproduced. Now, in lines 32 to 35 one of
429 the objects is cited as follows: "A further object is to provide a separate location for the magneto timer which shall be accessible without requiring the removal of the flywheel." That was one of Kettering's objects. And he

accomplished that object by locating that device, which is noted as a timer in Figure 1, on the outside of his engine casing. Now, as a quick explanation of how Kettering operates, I might say that Kettering has a crankshaft which is connected to the piston and which rotates in accordance with the operation of the engine. Now, the crankshaft is shown in Figure 2 of the Kettering drawing as Number 36. And there is a gear 42 on that crankshaft which meshes with a gear on a timer shaft 44, which I have colored in blue and which causes that timer shaft to rotate. Now, I think you will notice in that Figure 2 that I have a red line near the lower left side of the blue-colored shaft 44. That red line represents a flat portion which is the actual cam portion and which is formed directly on the timing shaft. Now, a follower, I think the number is 57. You may see there is a follower there which appears as a black dot near the red line I have drawn on Figure 2 and which rubs up and around shaft 44 and moves against the flat portion which I have just mentioned and which I have
430 designated in red. That movement of the rubbing block or follower operates a follower arm which causes the breaker points 51 and 52 to open and close. Now, I think it is pretty clear that the patent examiner at the time that he allowed the Madle Patent, and at the time he reviewed the Madle application knew that locating breaker points at an accessible position on the engine was certainly old. I might add th as a customary procedure that probably wouldn't hav een the point of novelty which caused the examiner to allow the Madle claims. If that was a point of novelty then obviously he would not have allowed those claims.

Going on to the next patent, which is on page 2 (of Exhibit D-28), which is a Patent to Smith, 1,291,216,

and a picture of which appears in the center of page 2 labelled Figure 1. The patent to Smith discloses a single cylinder engine having a crankshaft-driven magneto, and a camshaft driven at one-half crankshaft speed. The actual speed of the crankshaft is no longer in this suit, if I am correct. But as it happens the camshaft in this case is driven at one-half engine speed. There is a cam 5 located on the camshaft, and I have shown that in red. Now, that cam 5 functions to operate a follower which
431 is designated as 47 and the follower is connected to a follower arm 45, which extends directly to the left of the cam which is colored in red. Now, extending vertically to that follower arm is a shaft or plunger 50 which abuts up against an arm 56, to which the movable breaker point 57 is connected, the fixed breaker point being connected to some sort of plate which is fastened on the outside of the engine casing. Now, reviewing this patent the significant features I find here are that first of all the breaker points are accessibly mounted on the outside of the engine casing. And to repair or replace these points, access can be very easily had by simply lifting the cover which is shown as a dark line lying over the breaker assembly. Now, the second significant feature of this patent to me is that the cam 5 is located inside of the engine crankcase and the follower is also inside of the engine crankcase. Now, as I recall from listening to the testimony of yesterday and the day before, it seems to me that mention had been made that one of the advantages of Madle's device—and I couldn't find this advantage in the Madle Patent, but I suppose the structure itself might lend itself to such an advantage—is that the follower was located with the cam in an oily
432 zone inside the engine and that the breakers were located in a non-oil zone, which tends to prevent deteriora-

tion to the breaker points. I think Smith clearly demonstrates that feature was certainly well known at least back as far as the filing date of September 2, 1916. Now, as it happens the Smith Patent, like Kettering, does not adjustably mount cam 5, and does not provide for any means for advancing and retarding the spark by means of rotating his cam 5. And I think, as an aside, to diverge it should be understood that the advancement and retarding of sparks is normally seen on relatively higher horsepower engines. And that on a low horsepower engine, such as a one horsepower engine, normally the manufacturers do not advance and retard sparks. There are engines where they are advanced and retarded, but the big problem of advancing and retarding on a low horsepower engine is that of the cost of an advancing and retarding mechanism. And on a small cheap engine which has little horsepower the manufacturer normally don't bother with such advancing mechanism. And it seems to me that this would appear to be borne out in the Kettering Patent and in the Smith Patent, which I would assume is a low horsepower engine.

433 Now, going one step farther to the Smith Patent No. 1,636,017, which is on the right side of the page two of the charts of Defendant's Exhibit 28, without going into too much detail since it is a rather difficult drawing to read, I will say that Smith shows an advancing and retarding mechanism for the purpose of advancing and retarding his spark, and that this mechanism consists of circular weights which are designated as 76 on Figure 4, which rotate pinions 68, which is a small gear in this case, and that the pinion 68 rotates a larger gear 71 to which cam 77 is connected. Here the cam 77, which is almost impossible to see in these drawings here—there is another

Page of Transcript

figure in the Smith Patent which I do not have on my chart which shows that the cam 77 abuts up against a spring type of mechanism for holding the movable breaker contact and that by striking that spark timing mechanism sooner or later with the cam 77 the spark will be advanced or retarded. Now, this disclosure of Smith is a rather complicated way of advancing and retarding sparks and the cost of all the gears involved I imagine is quite expensive. Whether it is a practical device is something I couldn't answer, but at least to my mind it does not look like a normal way of handling this type of situation, and at the time the examiner felt the same way.

434 Now, referring to page 3, I will refer first to the Patent to Lefebvre. That is page 3 of Exhibit D-28. That is the Lefebvre Patent No. 2,215,106, which appears to the left center of page 3. Now, this disclosure of Lefebvre relates to a multi-cylinder engine, and relates to a timing mechanism which causes the spark plug in each one of the cylinders to spark at the correct time. In my study of the Lefebvre Patent I did not find any means for advancing or retarding the spark, but instead I directed my study to several features that I thought very significant here. One of the significant features which I find was that the cam which is designated as 17 in Figure 1 of the Lefebvre Patent—that is, the lowest part of Figure 1, is located within an oil zone inside of the engine casing, and that the follower which has a roller bearing on the end of a push rod 20 is also located inside of this oil zone. Now, I call The Court's attention to the fact the push rod 20 is the same type of rod that is used in that Exhibit 21d. That is, the rod has a follower which rides along the surface of the cam 17, and the push rod

goes to the left or to the right in response to the motion of the cam 17. The end of the push rod abuts up against
435 a rocker beam 22, which beam is fitted to a pivoting device on rod 23, and the rockable beam 22 carries the movable contact 26, the fixed contact 27 apparently being fixed in some sort of close relationship with the movable contact. I think I can compare the Lefebvre structure with the Exhibit 21d and show that the push rod 20 with a follower at its left end is the equivalent, in fact they are the same push rod or plunger which we were talking about before in 21d, that the push rod 20 abu up against a rockable or rocker, I guess is the best way of describing it, in 22 in the same way that the plunger in Exhibit 21d abuts up against a rocker, and that in the case of Lefebvre as in the case of 21d, the movable contact is carried by the rocker.

Now, I think we can leave that Patent for a moment and refer to one of the other patents which the examiner cited as prior art in the Patent Office. And that Patent is the Patent to Littlefield, 2,013,541, which is the picture appearing on the extreme right side of page 3 of Defendant's Exhibit 28. The Littlefield device has a timing mechanism which in this case is used for a multi-cylinder engine. The significant features which I felt were of interest was that first of all the cam or cam beams, which
436 I have shown as red spots in Figure 1 of the Littlefield drawing on page 3, are fixed to the surface of a gear 10, and that this gear 10 is used to drive the engine camshaft 11. In fact the camshaft 11 and the gear 10 are connected together. Now, further in Figure 1 at the center of the figure there is a rocker which I think is designated as 24. The numbers are hard to read on this particular diagram. This rocker, or follower, which I will call 24

Page of Transcript

for my own convenience abuts up and is struck by the cam beams which I have shown in red. And the opposite end of the rocker carries the breaker points 29 and 30, and causes these breaker points to open and close in response to movement of the follower rocker which I am calling 24 in this case. Once again I would like to bring out the thought that the follower end of the rocker abuts up against a surface type of cam which is fixed to the gear 10; that this follower is located inside of the engine casing adjacent to the gear, and that in this type of engine there is an oil atmosphere, that this oil atmosphere would also surround the cam and the cam follower. And I also know that the breaker contacts which can be seen quite clearly in Figure 3 of the drawings on page 3, is located to the left of a plate 34, or in other words are located in a dry atmosphere where I would assume the oil would not penetrate to any large
437 extent. Now, in this Littlefield Patent the interesting thing about it is that Littlefield was interested in advancing and retarding his spark but that rather than advancing and retarding his spark by means of an adjusting timing cam he took the back door approach and adjusted his follower position. Now, the follower happens to be mounted on a plate which I mentioned before as being plate 24, and there is a manual rod which appears on the left side of figure 2, which is connected to the plate 34. Now, if Littlefield wants to advance or retard his spark by in some way or another pulling or causing a thrust on the rod 61 he is able to adjust plate 34, which likewise causes the follower mechanism to be adjusted relative to the fixed cam points which I have shown in red.

• • •

Page of Transcript

439 I think the Court will notice that the Plate 34 is a circular type plate and that this plate is fitted within castings shown as annular ring in Figure 2 in 42, and in Figure 3, and there is some sort of flange — I don't see any number on that flange — on the right side of plate 34 in Figure 3. Plate 34 rides in a circular track so that the plate can be twisted within the track in any position. It is the same idea I suppose of taking a milk bottle cap and twisting the cap within the bottle in different positions.

Now, in reviewing these patents which I have just discussed it seems clear to me — I am referring back to the concepts which I listed on page 1 — that at least the first concept, which is to remove the breaker assembly from inside the flywheel and to place them in an accessible place, was well known and was shown by the prior art patents which were made of record by the
440 patent examiner in the prosecution of the Madle application. The patents that show that first concept are the patents to Kettering, the patent to Smith 1,291,216 and the patent to Lefebvre, and the patent to Littlefield.

Now, what we have left is concept 4, that is number 4, which I have given the name "to advance and retard the spark." Now apparently the examiner knew that was also old because the Smith Patent No. 1,636,017, showed advancing a spark and retarding a spark.

Now, from reviewing all of this material my conclusion is that what was new in Madle, which was not shown in the prior art patents, was the specific construction of the timing mechanism itself. That is, none of the references show a timing mechanism which in any way looks like the breaker of Figure 7 for example which

Page of Transcript

appears on page 1 of the Defendant's Exhibit 28. I am referring only to those prior art patents and references appearing in the file wrapper.

• • •

442 Now, referring back for a moment this is on Chart 11, page 11 to the patent to Charles F. Kettering 1,463,958. As I said before, this patent was one of the file wrapper patents which was made of record by the patent examiner in the prosecution of the Madle applications. Now, as I said before, that patent showed a single
443 cylinder four-cycle internal combustion engine. There also happened to have been a magneto connected with the crankshaft. A timer shaft 44 is geared to the crankshaft 36 and operated at one-half crankshaft speed. Now, a timing cam 57, which is a flat portion on the timing shaft, is provided. I don't have that colored on page 11, but I think if we refer back to page 10 a moment we can see the red line which signifies the cam portion on Figure 2 of Kettering. Incidentally, the drawing of Kettering 1,463,958, on page 11 is the same as the drawing on page 10. Page 10, in addition to that drawing, also shows a wiring diagram of Kettering's breaker points, and that of his magneto, which was made to explain the magneto and breaker point operation, which is no longer involved in this case, therefore, I will not refer to that figure further. Kettering shows breaker contacts 51 and 52, and he shows these breaker contacts on the outside of the engine crankcase for accessibility. As I mentioned before, Kettering does not show advancing and retarding of his spark by any automatic means.

This second patent to Kettering which appears to the middle left on page 11, is 1,430,524. Now, this patent discloses substantially the same subject matter disclosed

Page of Transcript

443 in the first Kettering Patent, that is, so far as the subject matter is relevant to the claim now in suit in the Madle Patent. The reason I put in this patent was that as I show in blue in Figure 3 Kettering's timing shaft serves two functions. First, the time shaft timing of the breaker mechanism for the sparking of the engine and, secondly, it also is a timing shaft for the valves of the engine, to time the valves. Therefore, I wanted to make it clear that a timing shaft is a timing shaft and may be used either solely for the purpose of operating a breaker mechanism or alternatively to operate a breaker mechanism and the engine valves, and I think that blue-colored area of Figure 3 discloses that feature quite well.

Now, stepping over one figure to the right, I am now going to discuss the patent to Kettering 1,465,644. Now, this patent to Kettering, which was filed as an application on October 4, 1915, which was issued in August of 1923, shows that Kettering was concerned with the problem of advancing and retarding his spark in an engine, and was specifically concerned with the problem of automatically advancing and retarding the spark. Now, I have colored the various elements in this figure in order to illustrate the various elements which I think are comparable to those elements in the Madle Patent,
445 and incidentally also to Plaintiff's Exhibit 21c. Now, you will notice that in Figure 2, which is the Figure on the upper-left side of that drawing, shown in green are its arcuate arms 262, which are fixedly connected to a part or disc which is shown in yellow in the Figure 1, directly beneath Figure 2, and labelled 261. Now, the yellow portion 261 is fixed on the timing shaft 257, which is shown in blue in Figure 1, so that the rotation of the timing shaft rotates the yellow portion 261, and also,

Page of Transcript

of course, the weights 262, which are shown in green. As the speed picks up these weights, which are a centrifugal type of weights, pivot at their free end outwardly from the axis of the shaft 257. Now, I think by referring to Figure 2 for a moment, it can be seen that there are openings or depressions 267 in the weights, and that these openings or depressions engage horns which are labelled 270 in Figure 4, and are shown in orange in Figure 4 of the Kettering drawings. Now, these horns
446 are fastened to a shaft, and on top of portion 271 of the shaft a cam 268 is mounted. Now, I think it should be specifically noted that the cam 268 is a tubular-type cam. In other words, it is like the cam which is shown in Plaintiff's Exhibit 21c. And as cam 268 is mounted upon the shaft 271 it becomes part of the structure shown in Figure 4, and the horns 270 shown in orange are directly related with the cam so that the movement of the horns will cause movement of the cam itself. And I think that corresponds to what we called a horn yesterday on the cam of Exhibit 21c which is engaged in a depression in an arcuate arm or weight in the same way that Kettering operates his timing mechanism. I might add, the Kettering application so far as I can make out seems to be concerned with certain novelties concerning the weight itself, to eliminate the weight, but it is not pertinent here and I won't refer to it any further, I will restrict myself to the colored elements which I mentioned before.

447 Now, I will turn to page 13 of Defendant's Exhibit 28. On this page there is shown Figure 1 and Figure 5 of the patent to Sturtevant, Patent No. 740,781. This chart was made by taking a double-sized exposure of Figure 1 and reproducing it on this page. Figure 5 is a single-size exposure, wasn't blown up, it is actual size from the

patent. Now, Sturtevant discloses an ignition timing mechanism which includes a cam shaft gear fixed on the camshaft. And this gear is designated by the numeral 25
448 in Figure 1. The camshaft gear meshes with a gear that is on the engine crankshaft, and that is not seen in Figure 1, but I believe an examination of the other figures of the patent which are not shown in this chart, will show that to be true. For example, in two of the drawings not shown on this chart, the cam gear is shown as being twice the size of the camshaft gear, and therefore in my opinion must drive the camshaft 26 — which is shown in blue on the chart, Your Honor — at one-half crankshaft speed. Now, I will repeat, the camshaft is shown in blue on Figure 1 and also in blue on Figure 5. And the gear is mounted on this camshaft. Now, a cam plate 39 — that is shown in green, Your Honor, in Figure 1 — is rotatably carried on the camshaft 26 shown in blue, and upon this cam plate there is fixed a cam portion or cam bump 38 shown in red. I think it can be shown that the red cam bump is fixed to the green cam plate, and together they rotate or can be rotated on the camshaft 26 shown in blue. Now, there are centrifugal weights 42. Those are the elements which I colored yel-
449 low on Figure 1. In this case it is interesting to note that Sturtevant uses two weights, one opposite the other. They are fixedly connected to the cam gear 25 at pivots 41. These weights swing outward under centrifugal force due to rotation of the camshaft gear 25, and its swinging is resisted by the springs 45. Those are those vertical zig zag lines which appear on opposite sides of the green cam plate. The weights are connected to the cam plate 39 by means of links 46, and I also show those links in yellow to each side of cam 38. Now, as the weights swing

Page of Transcript

outwardly around their pivots 41 due to centrifugal force, links 46 which are connected to both the weights and the cam plate 39, causes the cam plate to rotate relative to the blue shaft 26, and that this rotation of the cam plate relative to the blue shaft moves the cam bump 38 to either advance or retard the spark.

Now, what I would call attention to is the timing mechanism, the mechanism to move the cam. Now, referring to Figure 5 for a moment, which is the figure appearing on the lower left side of page 13. In this figure the breaker mechanism is shown, and the breaker mechanism consists of a follower 37, which is located adjacent to that vertical red line on Figure 5. The follower
450 37 contacts cam bump 38 once every revolution of the camshaft 26. Now, each time that follower contacts the cam bump, the plunger 36 moves to the left. And the plunger 36 at its extreme left end carries a breaker point, and going farther there is a contact which is called an anvil, in the point 35, a fixed breaker contact. Now, the structure shown in Figure 5 is actually designed so that the plunger not only reciprocates back and forth towards and away from the cam plate, but also turns slightly in order to assure there is a clean contact at all times between the breaker points. Now, I don't think that feature is significant to bring out the fact that this plunger and this follower carries a movable breaker contact, that this movable breaker contact engages a fixed breaker contact. I also want to bring out that the follower 37 is shown to the right of the cutaway part of the engine 33 in Figure 5 — that cutaway portion is the cover which fits over the gear and tir ng mechanism area — and that the cover 33 may be removed and that such removal will take the mechanism along with it. So that

Page of Transcript

it is apparent that the follower is inside of the engine wall where it is susceptible to being lubricated, and that the breaker mechanism is outside and accessible,
451 as shown in Figure 5.

Now, in my mind, while I had a great deal of difficulty yesterday in attempting to read Claim 5 of the Madle Patent on the device 21c which I now hold in my hand, I think I can say categorically that if Claim 5 could be read upon this device 21c, in my mind then Claim 5 must also be read upon the device shown in the Sturtevant Patent. Because the device 21c in my hand includes a movable breaker arm and a movable cam, which cam is carried and rotates upon the cam shaft and not by the cam gear. The purpose of my showing the drawing of the patent to Sturtevant was to show that at least as far back as October 6, 1903, which is the issuing date of the patent to Sturtevant, that it was well-known in the engine art to take the camshaft gear and to pivotally mount upon the camshaft gear centrifugal-type weights which are restrained by springs. That it is also old to mount an adjustable timing cam on the camshaft and to cause the adjustable timing cam to rotate relative to the cam shaft by means of some sort
452 of engagement or connection with the centrifugal-type weights. That it is also old to accessibly mount breaker contacts on the outside of the engine casing, as shown in Figure 5, and to have the follower of the breaker mechanism inside of the engine casing and in engagement with the adjustable cam.

Now, I would like to refer to the next page, page 14. Page 14 is a double-sized reproduction of the drawing of the British Patent to Pullin, No. 310,082, which application was sealed April 22, 1929. Now, this patent to Pullin — this British Patent, part of which I have

Page of Transcript

colored, discloses a timing mechanism. This is a timing mechanism, and Pullin feels it may be used in any number of places. He does not show any breaker contacts that are movable, or any other object which is movable other than a plunger, which is colored light yellow, and to which plunger he can connect whatever he wants to move. So this shows a timing mechanism per se. Now, Pullin discloses a crankshaft 8, which is the top shaft in Figure 1, which is geared to a camshaft 12 by means of two interconnecting gears 10 on the crankshaft and 13 on the camshaft. Now, you will notice that I show the
453 camshaft colored blue. You will also notice in Figure 2, which is a cross-sectional view of a part of a camshaft, and the gear 13, that apparently the gear and the camshaft are formed in one piece. I don't know why he made it in one piece, but it is apparent at least from the drawings that the camshaft and the gear are one piece. And I show only the camshaft in blue. Now, slipped over that camshaft is a cam 11, shown in red. This cam 11 is a collar and slips over the camshaft in the same way that this collar cam on Plaintiff's Exhibit 21c slips over the end of the camshaft. Abutted against the red cam is the follower 29, which is shown in yellow. And a plunger rod 28 extends upwardly in Figure 2 from the follower 29 for plunger movement towards and away from the axis of the camshaft. Now, I think that so far as I have gone and by reference to 21c we can say that we have in 21c a camshaft, a cam gear, a cam which is solidly and rotatably mounted upon the cam shaft, and which is adapted to have a plunger-type follower abutting against the cam surface of the tubular cam. Now, what is missing in the Pullin Patent is that the cam 11, which is shown in red, is not automatically adjustable. The cam

Page of Transcript

is adjustable but only by manual means. In order to adjust this cam, the cam itself is provided with openings
454 25, which is shown in Figure 2 and into which a pin 16 slides. Now, the pin slides through an opening in the gear 13 and maintains the cam 11 in a fixed position relative to the gear 13 and relative to the camshaft 12. If it is desired to adjust the cam or to retime the device, then that must be done by removing the pin 16 manually and rotating the cam until the next hole is lined up with the pin 16 and then shove the pin back into the hole. The reason I illustrated the drawing of the patent to Pullin was that I wanted to make it clear that the art, as far back as April 21, 1929, the sealing date of the patent to Pullin, knew enough to slip a tubular-type cam on a camshaft next to a camshaft gear and to use a plunger-type follower and follower arm abutted up against the cam surface of the cam. And I think this drawing clearly brings that out.

Now, referring to page 15 of Defendant's Exhibit 28, in a chart shown there, which is labelled "Defendant's Chart Showing *That it is Old to Pivotally Mount a Centrifugal Weight on a Camshaft Gear, and to Use the Weight to Adjust an Ignition Timing Cam Carried by the Gear*". Now, you will notice that Figure 1 of Erickson, which is the patent shown on this page 15, Erickson No. 1,401,058, shows a camshaft gear 1—this is Figure
455 1 I am referring to—which carries the centrifugal weight 16, which I show in green. Incidentally, that centrifugal weight is broken into several parts, and I generally call the weight 16 and color it green in order to simplify my description of this patent. Now, the cam gear 1 is mounted on a shaft shown in blue on Figure 1. Pivotally mounted on the cam gear 1 is a cam shown in red, and this red

Page of Transcript

cam is pivoted at 13 to the gear 1. Now, it can be seen that as gear 1 rotates, the weight 22 on the end of the centrifugal weight show in green will swing out into a dotted position shown in Figure 1, and that this movement will cause the opposite end of the weighted arm, that is, the end 18, to move the cam 12 shown in red to its dotted position, also shown in Figure 1. The cam movement is limited by means of stop pins 14 and 15, something equivalent to that in Claim 5 to my recollection. But as I remember there were stop bars involved in this suit and there were stop bars described previously by whoever it was described Plaintiff's Exhibit 20c, to show that the cam is limited in its movement by means of a pin and stop bars formed on the cam surface of Plaintiff's Exhibit 20c. And I think it is apparent that the use of stop bars to limit the motion of a
456 cam was not new and was very beautifully illustrated by whoever drew the original patent drawings to Erickson, which patent issued in December, 1921. Now, this timing mechanism of Erickson, that is, the cam and the weight which moves the cam and the gear is used to move a follower arm 8, which is shown in yellow. The follower arm 8 is connected as part of the magneto mechanism, and because the magneto mechanism is of no importance in this case I will simply say that 8 is a follower arm, period, and that you may connect in my opinion whatever you may want to connect on the opposite end, that is, the end opposite to the end which indicates the red arm. Thus I will limit my discussion concerning the remaining construction of Erickson.

Now, turning to page 16 of Defendant's Exhibit 28, I have illustrated here the drawing of the patent of Cochran, and I labelled this chart "Defendant's Chart Showing *That it is Old to Adjust an Ignition Timing*

Page of Transcript

Cam by Means of Centrifugal Weights Pivoted Upon a Part Fixed to and Rotated with a Timer Shaft", as disclosed by Cochran's Patent 798,992, September 5, 1905. Now, the patent to Cochran discloses a part 10 which is shown in Figure 1 of the Cochran Patent as a circle affixed to and rotated with a shaft 9, which is colored blue in Figure 1. The patent also discloses a circular
457 weight 18 which I have shown in green. Now, in the patent the various parts of this circular weight are given different numbers. However, I will refer to this entire weight as the green weight, or weight 18 and eliminate all extraneous numbers. The circular weight shown in green is pivotally mounted on the face of part 10 and the end of the weighted member, and engages cam 11, which is shown in red, and I think it is apparent that the rotation of the part 10, and, of course, the shaft to which the part is connected, will cause the lower right side of the green weight to swing away from the blue shaft and cause the upper left tongue portion to push the red cam 12 downward in the slots 13 and 14 into the direction of the yellow-colored follower 3 in this particular drawing. It is to be noted that the cam 12 is carried by the fixed part and is carried by means of pins 12, which extend through the slots 13 and 14 in the fixed part, in order to prevent the cam 12 from becoming loose from the fixed part. Now, I observe in reading this patent that the cam 12 was not physically connected to the weight number 18 shown in green, but that it is pushed by the end of the weighted member in one direction, and it is returned from that direction by means of the spring 19, which is a leaf-type spring having one
458 end 22 connected to the red cam and a portion extending between studs or buttons 23 on the green weight and connecting it with a pin 21 on the fixed part and another

Page of Transcript

stop of some sort 22 prime. So that it can be seen that this spring 19 restricts the motion of both the green weight and of the red cam. And that the cam and the weight will move together at all times despite the fact they are not physically and integrally connected. Now, you will notice that I have colored in red a Follower 3, and that this Follower 3 is the equivalent of a plunger, because it is pushed towards and away from the axis of the camshaft, and that this plunger or follower 3 causes a rockable arm 2 to rock and thereby open and shut the movable contact breaker point 4 and the fixed contact breaker point 5. I bring this patent in for the purposes of showing that at least as far back as September 5, 1905, it was well known to adjust a cam mounted on a fixed part by means of a centrifugal weight also mounted on the fixed part, that at least as far back as 1905 it was well known to use a follower which strikes the cam once each revolution of the fixed part on its camshaft in order to open and close ignition breaker points.

Now, proceeding farther to page 17. Page 17 refers to the patent to Heaslet, No. 1,239,689. On this page 17
459 of Defendant's Exhibit 28, I have placed a title which reads as follows: "Defendant's Chart Showing *That it is Old to Adjust a Timer Cam Carried by a Timer Shaft by Means of Centrifugal Weights Pivotally Carried on a Part Fixed to the Timer Shaft* as disclosed by *Heaslet* No. 1,239,689, Sept. 11, 1917." Now, the patent to Heaslet is important because it shows a mechanism for adjusting a cam which is quite similar to the mechanism broadly disclosed in relation to the Madle device and specifically mentioned in relationship with Plaintiff's Exhibit 21c. Now, you will note that I use a color scheme—I put these colors in myself with colored pencil—in

which I show the engine driven timing shaft 22 colored blue. And that blue shaft can be seen in Figure 7, Figure 8, Figure 3, and Figure 4, which are Figures actually cut out of the Heaslet Patent, and reproduced on this large sheet of paper. Now, there is a part 48 which I colored yellow, which is fixed to and actually shown as being integral with the timer shaft 22. That yellow part is a long narrow member and is colored yellow, and can be seen in Figures 8, 7, 3 and 4. Now, the fixed part which I will refer to as the yellow part has pivotally mounted on it a pair of weights or arcuate arms
460 which I colored green in the different views of the drawing. I think it is apparent that the rotation of the timer shaft 22, which is geared to the engine crankshaft in any suitable way, according to the patent, causes the fixed part—the yellow fixed part to rotate with the timer shaft, and as the speed increases causes the arcuate arms which are shown in green and which are circular weights to move or attempt to move away from the axis of rotation. Now, since the green weights are pivoted at one end to the yellow fixed part, only the free ends which are the ends to which springs 53 are connected with a small round button, as can be seen in Figure 4, move away from the axis of rotation. Now, these free ends of the circular weights are connected by means of links 60, to horns, which I colored orange and are shown in Figure 4, Figure 3 and in Figure 8. The horns are part of a tubular-type cam. The tubular type cam consists of a tubular member having a hole through the center, which hole permits the entry of a tip part 50 of the timer cam 22 as shown in Figure 8, and the actual cam bumps of the cam lobes are located, in Figure 8, that is, at the top of that member colored red. And I think if we refer to Figure 2 we can see the top view of the cam lobes, which

Page of Transcript

461 are shown in red. Now, the purpose of this timing mechanism and these circular weights that I have mentioned, is to cause the cam 54 colored in red to be adjusted relative to the timer shaft 22 in order to advance and retard the sparks of the engine. I might also mention that the particular problem which Heaslet was concerned with in his patent, along with this, was also that he wanted to adjust his casing, that is, the whole box that holds the timer mechanism, relative to the timing shaft in order to adjust the follower, which I will describe in a moment or so—so as to obtain two adjustments for advancing and retarding the spark. However, the adjustment of the box itself or container is not pertinent to this case, so I will restrict myself only to the one device which is shown; namely, the circular weights which are used to move horns which are connected to a tubular-type cam shown in red. Now, referring to Figure 2, which as I have mentioned before is a top view of the cam lobes and the cam 54, we can see that a follower 43 comes into contact with the cam lobes. Now, that follower 43 in Figure 2, at least, is shown as a half-circle directly in contact with the top part of the red colored cam. This follower, which is connected to a rocker arm 42, causes
462 the arm to pivot, and as the rocker arm is connected to the casing of the timing mechanism it opens and closes the movable breaker contact 41 with the fixed breaker contact 39. Therefore, I think we are safe in saying that at least as far back as September 11, 1917, the date that the Heaslet Patent was issued, that the engine art and the ignition art very well knew of the use of a mechanism for adjusting a timing cam automatically, which mechanism included circular weights mounted on a fixed part connected with a timing shaft, and show the circular weights

in there connected with a timing cam which operated a follower and a breaker contact.

I would like to direct The Court's attention to page 18 this time, wherein I show a chart which is labelled as follows: "*Defendant's Chart Showing That it is Old to Form a Timing Cam on a Centrifugal Weight and to*
463 *Pivot the Weight on a Part Fixed to and Rotated with a Shaft Geared to the Engine*, as disclosed by *Farwell*, 816,083." On this particular page I had reproduced the three sheets of drawings from the Farwell Patent, and also had reproduced parts of the specifications which appear in the lower left-hand of this page and are surrounded by a border of black lines. Now, Farwell discloses, broadly speaking, a rotatable shaft *A*, which I have colored in blue, and this part as a fixed part *A Prime*, which I have colored in yellow. Carried by the fixed part are circular weights which I have colored green and which can be seen in Figures 4, 5, 6 and 7 as being colored in green. In addition, Farwell discloses a cam surface C4, which I have colored in red, and it is part of or fixed with the circular weight *C*. It is the weight on the left-hand side of Figure 6 and Figure 7. The way this follower device operates is that he provides a top cam plate which I think is labelled *D*, capital *D*, and this plate is provided with a cam section which is small *d*—I am referring now to Figure 3 of the Farwell drawing—there is a follower *E* which is a roller which makes contact with the periphery of this plate capital *D*, and as the camplate *D* rotates because of the rotation of the timer shaft *A* the follower contacts the cam surface *D*
464 once each revolution and causes the movable breaker point *e* to make contact with the fixed breaker point *f*. And that also is in Figure 3 that I am referring to. In-

Page of Transcript

cidentally Figure 2 illustrates the breaker points in their closed position. You can see in Figure 2 the follower *E* is in contact with the cam *d*. Now, the function of the weights which I have colored in green is to cause the cam surface C4, which I have colored in red, to extend out beyond the peripheral edge of the plate *B*, and I think in Figure 1 we can see the cam C4 which I have not colored in red, incidentally, in Figure 1—in contact with the follower roller *E*. And my understanding is that the reason for this cam C4 is to increase the length of time during which the breaker points are kept closed. The engine spark is caused at the time that the follower *E* leaves the cam *d* or C4 as the case may be; so that the spark is advanced or retarded in accordance with the location of the red cam surface C4. The reason I have brought out this patent is to show that the art knew at least as far back as March 27, 1906, which is the date of the issuance of the Farwell Patent, that it could form a cam surface on a centrifugally operated weight, and that the cam surface could be made to move with the weight,
465 in this case directly in response to centrifugal force because it is part of the circular weight. And I might refer back to the Madle structure as shown on page 1 where in Figure 7 the same general concept is shown, that of a weight shown in green having a cam surface shown lightly in red fixed to the pivoted cam and part of the circular weight. Incidentally, in Figure 8 of the Farwell structure, which is the figure on the right-hand side of page 18, there is shown a structure wherein four followers and four sets of breaker contacts are used in order to adapt this device for multi-cylinder operation, so we can see that Farwell planned his device for either single or multiple cylinder operation. The operation of the ignition system above and beyond the timing mechanism,

Page of Transcript

which I have just disclosed, is I think in accordance with the subject matter we are considering now in the Madle Patent, and therefore, will go no further with it.

I would like to refer next to page 20, skipping page 19 which I will come back to shortly. Page 20 is labelled: "Defendant's Chart Showing *That Ignition Timers Consisting of a Tubular Type Cam Carried by a Timer Shaft, and Adjustable by Means of a Centrifugal Weight Pivoted on a Part Fixed to the Timer Shaft, is Old,* as
466 disclosed by *Prior Art Patents on Distributors.*" Now, in the automotive ignition system art there is a device known as a distributor whose general function is to make sure that the spark plugs in the engine spark when they are supposed to spark. Now, referring to the patent to Davis, 1,983,072, issued December 4, 1943, we can see a timer shaft 24, which I illustrated in blue in Figure 1, Figure 7 and Figure 11. Incidentally, I have selected these figures from the patent because of their illustrative values and because they show the structure quite clearly. There are very many other features in the patent which I simply omitted in my chart. As I mentioned, the timer
467 shaft is shown in blue. Affixed to the timer shaft is what I choose to call a fixed part, which has a yellow color, being rotated with the blue shaft. And carried on this fixed part are a number of circular weights 43—referring to Figure 7, that is—which are colored green. Figure 7 and Figure 11 are not quite the same mechanism, there is a slight difference between the two, and I will bring that out afterwards, but right now I will restrict myself to Figure 7. The green weights are circular weights which correspond to the arcuate arms of the Madle Patent, and are so designed that when the shaft which is colored blue rotates quickly the weights swing out due

Page of Transcript

to centrifugal force around their pivot points 42, to which the two springs which are zig zag black lines on Figure 7 are connected. The movement of the weights radially away from the blue shaft rotates the horns which are colored orange and to which is connected a tubular-type cam. The tubular-type cam is shown in red. And referring to Figure 1 for a moment we can see in cross-section a tubular-type cam which is slipped over the end of the timer shaft. Now, as the weights pivot outwardly and engage the horns, the weights are restrained by the springs I have just mentioned, but eventually will over-
468 come the springs to some extent and swing outwardly rotating the light-orange horns, thereby rotating the tubular cam shown in red relative to the blue shaft. Now, in order to restrict the cam in its motion you will notice on Figure 7 colored in orange a round spot which is labelled 151. This round spot represents a pin which is connected to the horn and which fits within an opening 155, which is the figure with the dashes around it in the fixed part so as to limit the amount of movement which may be imparted to the horns and to the attached cam. I mentioned that Figure 11 was slightly different than Figure 7, and the difference I mention was solely in the manner of the stop-pin or limiting means which in the case of Figure 11 consists of a pin 244 which slides within an opening or slot 251 in the yellow fixed part. The reason that I show this point of difference is that I want to show that the distributor, which is the art of automobile ignition systems, was well aware of the problems of advancing and retarding sparks and of advancing and retarding sparks by means of a tubular-type cam carried by and it may be on a cam shaft, and which cam is adjusted by means of centrifugal weights which are pivotally connected to a fixed part rotated with the timer shaft. And

I think the patent to Davis clearly brings that out and
469 shows that that structure was known at least as far back as July 14, 1932, the date of issuance of the Davis Patent.

The patent on the right side of page 20, Hardman, is for all practical purposes the same as the Davis Patent. And when I say the same, I mean it shows the use of a fixed part colored yellow connected and mounted on a blue shaft and rotated with the shaft. It also shows weights or arcuate arms which are colored green, which are pivotally connected to the yellow fixed part and which operate horns 87 and 86.

Now, in each of these cases the distributor is made for multiple-cylinder egines. That is, it is made to operate in an engine which has more than one cylinder and accordingly the cams are provided with a number of
470 lobes. However, I think it is apparent that the number of lobes would be dependent upon the number of cylinders of the engine, and that there is no reason whatsoever why the devices of either Davis or Hardman should not be used on either a one cylinder engine or a multiple-cylinder engine remembering, of course, the correction of the number of lobes on the cam.

Now, I would like to refer back to page 19, wherein I have a label which reads as follows: "Defendant's Chart Showing *That it is Old to Operate an Ignition Timing Cam at One-Half Crankshaft Speed and to Adjust the Cam by Means of Centrifugal Weights Pivoted Upon a Part Fixed to and Rotated with a Cam Shaft*, as disclosed by *Examples of Prior Art Patents*." Now, in view of the fact that Claim 5, which is in issue, does not concern itself with a feature of operating its timing mechanism at one-half crankshaft speed, I think I can discard any discussion of that, other than saying

Page of Transcript

that should that question ever arise it is a very old feature as shown in the three patents on this page. Incidentally, I would like to limit my discussion to the fact that these three patents are examples I have selected from a bundle of prior art patents as being a fine illustration of a number of different ways of adjusting—that is, of advancing
471 or retarding a spark by means of a centrifugal-type weight. These weights are frequently called governer weights, incidentally.

Referring first to Churchill, which is Patent No. 863,151, and on the left side of page 19, we can see a pair of green colored weights 38 in Figure 1 and Figure 4. The weights are on a rotatable part which is rotated by means of a gear which can be seen in Figure 1, which engages a gear 18 carried by the engine shaft 15, also referring to Figure 1. Now, as the rotating part or weight carrying gear rotates, the weights shown in green tend to swing out relative to the axis of rotation, which I have shown as blue, and which designates a screw 23. The movement of the swinging weights is restricted by stop-pins which I have colored orange and which in Figure 1 are designated as 49, 50, 47 and 48. Now, the actual cam, if I can stretch the expression cam for a moment, consists of a stud 45 which I have colored red, and which appears in Figures 1, 3 and 4. The stud 45 is directly connected to the green weights by means of horns 39, as seen in Figure 1, and rotates slightly off of center of
472 rotation of the fixed part along with the weights. The way this device operates is that every time that stud comes around and strikes a spring 28, which I have shown in yellow, that spring 28 flies back to close the breaker contact, which I think is designated as 30 in Figure 3. Now, this structure is pertinent to the Madle device in-

Page of Transcript

sofar as I mentioned before it shows that the use of a centrifugal type weight for an engine ignition timing mechanism was well-known at least as far back as August 13, 1907, the date of issuance of the Churchill Patent. Now, the cam structure, of course, is not quite the same as that shown in the Madle picture, but it has a stud or cam which is carried by the weights and which is connected to the weights and which moves with the weights to strike what might be termed the follower which is the yellow spring.

Now, going to the next patent which is in the center of Chart 19, which is a patent to Riker, 906,290. This patent shows a gear *p*1, which I have colored light blue, which is a gear driven from a gear *p* located on the engine crankshaft. The gear *p*1 carries a number of centrifugal weights *p*4, which I have colored green in Figure 2 of Riker. The weights are pivoted to the gear at *p*6 which is at the top and bottom of the blue gear in Figure
473 2. Thus it can be seen that rotation of the gear causes the weights *p*4 to swing outwardly away from the dark blue colored shaft *e*35, and that this swinging motion of the weights is transmitted by means of links *p*8 to horns or arms *p*9 which I have colored orange, to be ultimately transmitted to a cam. The reason I show this patent is strictly to show that a tubular type mechanism, which functions for all practical purposes as a timing cam, slips
474 over a camshaft and is rotated relative to that camshaft by means of centrifugal weights, is not new, and goes back to at least December 8, 1908, the date of the issuance of the Riker Patent.

Now, the last patent on this page which I would like to discuss is the patent to Packard No. 780,221, which appears on the right side of page 19. This patent dis-

Page of Transcript

closes a camshaft which I have colored dark blue, and which is designated in Figure 4 of the patent drawing by the numeral 43. Carried by this dark blue shaft is a centrifugal-type weight 45, which I have colored green. Now, it can be seen that as the shaft 43 rotates, the weight 45 tends to become normal, that is, it tends to operate at right angles to the axis of shaft 43, or tries to straighten itself out to become vertical in the drawing. This tendency of the cam to move in response to centrifugal force is opposed by a spring 46. Now, directly connected to this cam by means of link 48 is a collar 49 which is a member having a cam surface 50 which I show in red, the collar 49 being shown in light blue—and it can be seen that the red cam, because of its angularity, because of being sharply cut into a V, presents either more or less of a surface along the narrow point 42, which I have colored orange, depending upon the location of the red cam surface 50 relative to the narrow point 42. I think the
475 best way to explain the operation of this cam is that we have a spiral-type cam which terminates at a certain point. And the red part 50 filled in that point of termination. By moving the red part we have either more fill-in or less fill-in. Therefore, that length or shortness of length of the cam point engages with a follower 37, shown in Figure 1, which is a push rod 37, and it appears in both Figure 1 and in Figure 4. For example, in Figure 4 it can be seen rising vertically from the narrow point colored orange. Now, this push rod extends vertically and by means of a linkage first of all causes a magneto-type structure to trip and generate current, and consequently by means of additional linkage structure opens and closes contacts 19 and 16 which appear in Figure 1, 19 being the movable contact. Now, I don't want to go

into the magneto structure or the magneto disclosure of Packard because it has nothing to do with this case, but I would like to say it can be seen we have a push rod 37 which by means of considerable linkages causes a breaker to open and close. So that we can say that at least as far back as January 17, 1905, it was known to use a push rod type of followers and follower plungers to operate
476 breaker points, and that it was known to adjust the size of a timing cam surface in order to advance and retard the sparks by means of centrifugal type weights, which is shown in this patent in green.

Now, I would like to continue on page 21. On page 21 I have illustrated a chart which is headed "Defendant's Chart Showing *Miscellaneous Ignition Timing Devices Using Centrifugal Weights to Adjust Timing of Engine Spark* as disclosed by *Examples of Prior Art Patents.*" On this chart page 21 I have attempted to show very broadly that the use of centrifugal weights for adjusting timer mechanisms, that is, by the use of swinging weights per se for the advancing and retarding of engine sparks is very well known and very widely used with different types of cams and with different types of followers, and in fact in one patent without a follower at all. I will very briefly review these patents because I simply want to bring out the one point of the use of centrifugal weights.
478 1,427,718, is the one I am talking about. The patent to Brown shows a fixed part which is a white circle in Figure 7 connected with and carried by a timer shaft *C*, which is blue. And it also shows a cam plate 43 colored red which is slipped over and carried by the blue timer shaft, and which has a cam bump 44, which can be seen
479 in Figure 6 of the side view. I think if you will just follow Figure 7 which I have colored. Figure 6 is a

Page of Transcript

side view of that structure. The red plate is adjustable relative to the blue shaft by means of arcuate arms or weights 47 which I have colored green. It can be seen that the arcuate arms 47 are pivotally connected to the fixed member 45, and are connected with the cam plate which is colored red by means of links 48. Those links are the white bars that run between the weights and the red plate. The motion of the centrifugal weights is restrained by means of a coil spring 49, zig zag black line that appears on Figure 7. And it is also restricted by
480 means of a stop shown in orange—a little orange dot shown in Figure 7. Now, this particular timing device is used in a magneto mechanism which has a movable armature, and many other elements which are of no concern in this law suit. However, I simply want to restrict myself to that one issue of Figure 7, which illustrates the movement of a plate carrying a cam, and which illustrates, as I said before, that centrifugal weights are well known and widely used as governors or as means to adjust different types of cams and timing mechanism.

* * *

482 Now, I also have on the right-hand side the patent to Brillie, which is Number 857,715. This patent is illustrated for the purpose of showing the use of centrifugal weights colored green and labelled g in Figure 4 for
483 rotating one shaft relative to another shaft. Now, by rotating one shaft relative to another shaft what I mean is that this particular patent discloses a coupling between two shafts. One of the shafts is a magneto shaft and the other is a shaft which is engine-driven on an internal combustion engine. Now, the coupling between the two shafts causes both shafts to rotate together. However, in this type of structure it is desirable at times to change the angular relationship between the engine shaft d and the

Page of Transcript

magneto shaft a, and the way this is done is the engine shaft a is provided with protrusions or extensions, whatever you want to call them, c. They are little knobs which slip out of that and into a socket in the opposite shaft d. Now, what we have is the equivalent of two or more fingers c fitting in a slot, which are much wider than the fingers on the opposing shaft, for coupling purposes. And the fingers c are pushed or adjusted relative to the socket in the shaft d which is the engine shaft, by means of the centrifugal weights g which are colored green, and it can be seen that these weights are pivoted at f1 on Figure 4, and that they have noses which fit into the sockets and which noses abut up against the finger c, so the angular relationship of the two shafts can be changed. Now, the reason for bringing this out is this:—I'm afraid
434 I don't have the exact number, but there is a place where patents are classified as being one shaft relatively rotatable to another shaft. In other words, when we get down to this actual analysis the timer mechanism here, what we really have is one shaft which is hollow, that is the cam, and that one shaft fits over another shaft which may or may not be hollow and that is the timer or camshaft. And what we are doing is adjusting the angular relationship between these two shafts, and we are doing that by means of centrifugal weights.

And the question is, is this particular device shown by Madle an advance in the engine ignition arts, or such an advance in timing mechanisms per se? Now, because we know that this type of centrifugally-operated time mechanism is very old in the engine arts I think we can discount it as being an advance in the engine arts. And that, if anything, of itself, is a plain ordinary machine element. All it is, is a movement of one part relative

Page of Transcript

to another part in order to impart motion to a third follower piece. Now, correlating that I can say the cam of [Exhibit] 21c may be considered a shaft and the camshaft may be considered another shaft, and all that the
485 person who made Exhibit 21c is doing is changing one shaft relative to the other shaft. The fact that he may or may not use a certain type of follower is immaterial. What I am doing, is breaking this down into a timing mechanism per se and saying that is old. I am also saying that the follower mechanism was amply illustrated — the follower and breaker point mechanisms,—as I mentioned before in connection with the Smith Patent and the Kettering Patents and the Lefebvre Patents is very old. Now, if I refer back to my page 2, we can see that the follower mechanism in Smith — in other words, whether that follower 47 contacts a cam which is fixed or which is adjustable is really immaterial. The fact is that it causes sparking at a certain time and that the breaker points are accessible and that the breaker points are not in an oily zone. Now, the next problem is we can adjust that cam if we want to, because adjustment of the timing mechanism is certainly one of the oldest parts of the ignition arts as I have attempted to show throughout these various charts. Now, the combination of a follower and breaker point with a centrifugally adjusted cam is quite old, as shown in patents to Sturtevant and as shown in patents to Phelon. And, of course,
486 as I mentioned before, Sturtevant even shows making his breaker points accessible on the outside of the engine and his follower being inside of the crankcase in an oily area.

The Court: Do you have any of these patents as fully explained as the Madle Patent?

Page of Transcript

A. Your Honor, I don't think I can answer that yes or no. But to my mind —

The Court: Which comes the closest?

A. To my mind anticipation means I can take some or all of a patent and say everything in the claim in suit is in this patent. Now, I would hesitate [to say] there is no anticipation here, I would say every single element of these patents are old per se and the functions of every one of these patents are old and well known in the arts. The functions are old and well known in the arts, as shown by the illustrating patents.

The Court: Which patent do you think comes the closest as combining the elements that are in the Madle Patent?

A. I would say, Your Honor, that so far as I am concerned the Madle Patent does not show invention because of almost any patent we can find in this book of charts. I could not nail one patent down because I think it is so old that I would hesitate to say one patent shows the
487 whole structure, I would say that the art knew of these elements, knew of these functions, and knew of their results.

As I said before in my opinion the Sturtevant Patent shows more structure of the Plaintiff's Exhibit 21c than it does of the identical features of the Madle Patent, but I will try and read them together and see if I can
488 interpret them. Now, there is a preamble to Claim 5 which states — that is, Claim 5 of Madle Patent 2,605,753: "In an ignition system for a single cylinder four-cycle internal combustion engine of the type having a crankshaft-driven magneto for effecting sparkplug operation." Now, to me this is a preamble which sets forth the en-

Page of Transcript

vironment of the structural elements which will follow. Now, as it happens Sturtevant happens to have a two cylinder engine, and whether or not he has a magneto is something that is not mentioned so far as I can find in the Patent. Somehow or other he provides current. But this preamble I think can be disregarded because the file wrapper patents, for example the patent to Kettering which I mentioned was in the file wrapper and shows just such a type structure and certainly the preamble could not have been the novel feature. It could only be an environment in which the invention was described. Now, the claim calls for the following elements: "Fixed and movable breaker points accessibly mounted on the exterior of the engine remote from the magneto." There are fixed and movable breaker points shown in Figure 5 in my page 13 of Defendant's Exhibit 28, and these contacts are carried by the plunger 36 and by the anvil 35. "A cam follower movably supported by the
489 engine remote from the breaker points." Now, the cam follower would be follower 37 in Figure 5. "A motion transmitting connection between the cam follower and the movable breaker point." I think it is evident the follower is located on one end of the push rod and the follower is on the opposite end of the push rod. "A rotatable part adjacent to said cam follower." By rotatable part I would take it to mean the gear 25, which is shown in Figure 1 — that is, the large-sized gear. "A driving connection between said rotatable part and the engine crankshaft whereby the speed of rotation of the crankshaft determines the speed of rotation of said rotatable part." I think that is pretty obvious, the engine crankshaft gear 24 which is very slightly visible in Figure 1 at the top of drive gear 25. "A member carried by said

Page of Transcript

rotatable part for rotation therewith and for rotation relative thereto in response to centrifugal force." That, of course, would be the weights 42 which are colored yellow. "And a cam surface on said member engaged by said cam follower." This is where I had a problem. The cam surface which is colored red in my chart is actually carried by a plate 39, which is slipped over the timer shaft shown in blue. Now as it happens the timer plate 39 is physically connected to the weights 42 by
490 means of links. The links are also shown in yellow, Your Honor, in the same way the weights are. Now, in my opinion I would prefer calling the cam 38 and the cam plate 39 as being carried by the camshaft 26. But since they are physically connected to the weights I suppose it could be broadly stretched and say that they are a connected part to the weight. I really don't like that interpretation, I would prefer the interpretation that this structure of Figure 1 is the same as the structure of Plaintiff's Exhibit 21c, and that if I could read the claim on Plaintiff's Exhibit 21c by saying that the cam is a surface which is on the member by which I mentioned the arcuate arm—if I could say that then I could also say the same thing is true in Sturtevant's, and if Claim 5 reads on 21c then it also must be shown by the patent to Sturtevant.

• • •

512 I would like to refer to page A of Defendant's Exhibit 63 and at the same time refer to Defendant's Exhibit D-64, which is an artistic rendition of, or cutaway drawing of, Defendant's VS700 Engine. That corresponds with the engine right here, which I think is Defendant's
513 Exhibit D-8. The purpose of the Chart A was to show that the various elements which are disclosed in the

Page of Transcript

Lechtenberg '789 Patent with certain exceptions were used long before the Lechtenberg Patent application for Patent No. '789 was filed, in the Defendant's Model VS700 Engine. Now, the model VS700 Engine, looking at page A, consisted of a cast iron casting which contained or comprised the cylinder which I have properly labelled as *Cylinder* on the left-side of page A; and the crankcase, which I also have labelled by a word *Crankcase* appearing at the lower right-hand side of the page shown in page 8. Now, in this engine, referring to the picture, the wall to which appears at the right side, is labelled *Removable Side Plate*. And the reason this is so labelled is that while the crankcase is integral or in one piece with the cylinder there was an access plate which is removable and which I have labelled *Removable Side Plate*.

This is a model VS700 Engine, Defendant's Exhibit D-8, which I now hold. The crankcase and the cylinder — this is the crankcase and corresponds to the portion
514 labelled *Crankcase* in the drawing — the cutaway drawing of Chart A. And this is the *Cylinder* also labelled in the cutaway drawing. And the sideplate would fit on the end which is toward me when I am holding the engine in such a way that the gas tank is away from me and the carburetor and the filler is on the left side of me. This plate is removable, and happens to be cut away to make it a model. There is within this crankcase a boss which I have colored blue, and this boss functions for a bearing for the engine crankshaft which I also have labelled as a *Crankshaft*. Opposite this bearing there is
515 normally a removable bearing plate which can be seen as the crossection crisscross in Chart A. Now, if I may refer to the picture D-64, which is an artistic rendition

Page of Transcript

of the particular exhibit on the floor, D-8, we can see here there is a large boss which acts as a bearing for the crankshaft. Opposite that boss is another boss also shown in blue which functions as a support or top bearing for the crankshaft and happens to be on a removable plate. Along side is a low small boss which functions to support the rod or axle which passes through an opening in the camshaft, which I think is better labelled in my chart—Chart B of the Defendant's Exhibit 63. I have a part labelled: *Camshaft Supported by Bosses at Opposite Sides of Crankcase*. Now, when I talk about the camshaft being supported by bosses, or whether this device is actually made as the gear and the camshaft are formed together in one piece, or I suppose could be made in two pieces and put together, and the shaft is a hole so that it actually fits through the shaft and into the small blue bosses shown at the left of the large boss, and also the other small blue boss to the left of the top large blue boss. Now, the arrow at the lower portion of the crankcase and from which the bosses which are colored
516 blue extend upwardly, functions as an oil sump, that is, as an oil reservoir. And I also have that labelled in Chart B and in Chart A of Defendant's Exhibit 63 as *Oil Sump*. Now, in Chart A of defendant's Exhibit 63 I show, on the right side—I emphasize on the right side—by coloring red the opening which is labelled *Opening for Adding Oil*, and the *Opening for Oil Drain*. And I also added a note to this Chart: *Note That Openings for Oil Adding and Draining Break Through the Wall of the Sideplate*. Now, what I mean by that—I mean I will refer to physical Exhibit D-8, the portion of the sideplate which I am now holding contains the oil filter and oil drain plug. And the little filler plug has a flat

Page of Transcript

knob to which is connected a semi-threaded piece screwed into an opening, and at the lower end has a small dip stick which is labelled *Add*. The function of the dip stick is to indicate when to add oil. Right below that oil inlet opening and extending horizontally into the side plate is the oil drainage opening in which there is a nut which has a hex-head and which is screwed into the opening. Now, referring—referring back to Chart A of Defendant's Exhibit 63, we can see also colored
517 in red a portion which I labelled *Mounting Plate*. And I labelled it as follows: "The size of the mounting plate is determined by the standard size of the engine mount on the lawn mower or other machine to which this engine is to be attached."

Now, I would like to relate Defendant's Exhibit D-64, Defendant's Exhibit D-8, and Chart A of Defendant's Exhibit 63, with the disclosure of the Lechtenberg Patent. For that purpose for the moment I will refer to Figure 5 of the Patent to Lechtenberg. Now, on Figure 5 of the Patent to Lechtenberg we have a large boss —incidentally Figure 5 is a figure of a coverplate, and I think that is Plaintiff's Exhibit —

Mr. Jones: Is that Plaintiff's?

A. I will refer to the patent

Mr. Jones: 16b is Plaintiff's.

A. I am not a manufacturer, I can't tell.

Referring to 16b and also to Lechtenberg Patent Figure 5, we have a large boss on 16b which is designated
518 Number 156 in Figure 5. We have a smaller in diameter boss which is labelled 158 in Figure 5 of Lechtenberg. And the bosses come up from an area which is used as

an oil sump or oil reservoir. Now, relating that to Chart A, we have a boss shown in blue which corresponds to and similarly functions the same way as does the boss 156 in Figure 5 of Lechtenberg. We also have a camshaft supporting boss illustrated in blue in Chart B, Defendant's Exhibit 63. We—with a certain comment I will add, corresponds to the boss labelled 20 in Figure 5, that is the lower small boss in Figure 5. This boss, shown in blue in Chart B, which I was just referring to, is used to support the axle, and serves as a thrust bearing for the camshaft. In the Lechtenberg Patent this boss is used as both thrust and journal bearing, but I suppose broadly speaking you can say both of them—that is, the boss in the Lechtenberg Patent and the boss in Chart B both contribute to support the camshaft. Now, what I am trying to show here is this: I am trying to show that Defendant's VS700 Engine used a large boss—a pair of large bosses to support the crankshaft, and a pair of small bosses to support the camshaft, and that these bosses arose out of or came out of an area which is used
519 as a sump, and that there is a drain and filler opening for oil in close proximity to each other, which both open up in the sump area. In addition there is a mounting plate in the VS700 Engine, Exhibit D-8 and shown in my Chart, Exhibit 63, in the same way there is a mounting plate labelled 8 in Figure 5.

Now, taking the diagram shown in Chart A, I would like to say that when all of the parts are assembled as shown in the diagram we have an operative structure which is the full equivalent and which functions with the only exception of the small boss, in the identical manner as does the elements of the Lechtenberg Patent

Page of Transcript

when those elements are assembled, when the base is assembled to the block which consists of the integral crankcase and cylinder. Now, the VS700 Engine is cast iron, or was made out of cast iron, and I believe that that model of Exhibit D-8 is a cast iron engine. However, in reviewing the claims of the Lechtenberg Patent and searching high and low through these claims I never did come across, to my knowledge, the word aluminum. So that the material involved in this case could be anything, whether it is cast iron, aluminum or what-have-you, the claim don't specifically call for aluminum, and I don't believe Lechtenberg invented /an aluminum engine anyway, because aluminum is a well-known light
520 weight material which is used because of its lightness and is used for many purposes and for a long time in the engine art.

Now, the major difference that I can find between the Defendant's Model VS700 as embodied in the Charts A and B of Defendant's Exhibit 63, is this: The sideplate, which is removable in the model VS700, is not removable, but is an integral part of the crankcase in the Lechtenberg Patent. Now, Lechtenberg has provided an access opening, and what he does is, he cuts off the area which I have shown in red including the blue boss on Chart 9 and uses that as both his access opening and as his mounting plate. In the VS700 Engine shown in Chart A, the mounting plate is removably connected to the base of the crankcase. And I think I can show that referring to Defendant's Exhibit D-8. This circular red object at the bottom of the engine is the mounting plate. It is provided with bolt holes for the purpose of bolting the engine onto a lawn mower deck or on to the deck of whatever machine that is going to be operated by the engine. Now,

the mounting plate or circular object is bolted to the base of the engine by means of bolts. In other words there are two separate pieces here and the mounting plate may be removed if desirable and the engine may be directly bolted onto an object, that is, on a lawn mower without using the mounting plate. The mounting plate actually furnishes a good wide area for bolt holes. And the reason for that is that most lawn mowers are arranged to receive bolts spaced apart at certain distances and therefore, require a large round mounting plate. My observation is that the baseplae of the Clinton D-8 engine and the baseplate of the engine that was identified in this Court as the McCullough Engine, that is Defendant's Exhibit D-7, both function to accommodate bolts and to provide bolts for the plate to be connected to the lawn mower deck. As I said before, there is no reason why the plate cannot be removed, and the engine can be bolted if desired directly to the base of a lawn mower or whatever object, there are holes located on the lawn mower to accommodate the holes. Now, in order to illustrate that point, I am going to refer to another physical object.

The Court: Well, doesn't the 16b have the same bottom plate as 16d? Those two are the same, they have the same mounting plate, don't they?

A. I think I can show all three of them are the same. The VS700 Circular Base, the engine I am now holding, which is Defendant's Exhibit D-8, and Plaintiff's Exhibit 16b and Plaintiff's Exhibit 16d have the same mounting plate. Now, this VS700 Engine is adapted to be used with a vertical crankshaft or horizontal crankshaft and when used as a horizontal crankshaft and mounted on the end with the cylinder on top the mounting plate is not secured in the position shown in Chart A. And by

Page of Transcript

the same token the removable plate which I have labelled in Chart A is removed and the substitute baseplate is at
523 tached in order to mount the engine in a vertical position

I will return to the Lechtenberg Patent and comparing it with the disclosed material on Chart A of Defendant's Exhibit 63. Now, as I said, my observation in comparing the Chart A and in comparing a drawing or Figure 5 of the Lechtenberg Patent, was first of all that Lechtenberg removes the area I have shown in red and blue on Chart A and uses that as the access opening, and his opening to support the power take-off end of the crankshaft, and does not use the removable sideplate which is shown in this drawing on Chart A. In addition Lechtenberg uses a solid top wall, so far as I have been able to determine from the Patent, instead of the removable top wall here which I mentioned before was
524 crisscrossed in crossection. Now, I would like to bring out once again that each and every one of the elements in the VS700 which I have designated in these illustrations function and do the same job and produce the same results as are produced in the Lechtenberg Engine.

Now, I have heard the comment made that what Lechtenberg did, what his invention involved, was this—the comment I am going to answer is the one that was made by witnesses for the Plaintiff—that what Lechtenberg did was provide an engine in which one casting, which was expensive, contained all the constants—.

The Lechtenberg invention apparently is the location of constants—all constant elements which will not be changed, in one casting which is the expensive casting,
525 and the location of non-constant elements in relatively inexpensive baseplate. Now, in looking at this engine I am having, first, trouble locating that in the claim of

the Lechtenberg Patent, but most important I am wondering just what are the variables. I can find only one variable in the V8700 engine when I compare it with the so called variable part of the inexpensive baseplate castings of the Lechtenberg Patent. And that one variable I can find is the mounting plate—the size of the mounting plate. All pieces are all constant, there is nothing variable about the bases for the main part; but the V8700 engine shows a base which is the same as that claimed in Lechtenberg Patent. In V8700, referring to Chart B, shows a cam supporting boss which is the same as that shown in the Lechtenberg claims. And the removable mounting plate, which I suppose we could consider as a variable element, is present in the V8700 Engine, that is if this engine were to be used on a different size deck, the mounting plate would either be removed or would be treated differently, or in the alternative—I will end that there.

Now, continuing with my charts I would like to bring out first of all that the manufacture of an engine having an integral crankcase and cylinder is well known in the 526 engine art, as evidenced by the patents shown on page E of Defendant's Exhibit 63. What I have done on Chart E was to select a number of patents out of a bundle of patents, and selected these patents on the basis of their being good illustrations of the practice of casting an engine cylinder integrally with the crankcase. And the patents which I show here, and which I will not describe in any detail since I have colored the integral portions orange, and in each one of the patents except one I have cut out a part of the specifications and underlined that portion of the specification to show that the crankcase is cast integrally or in one piece with the cylin-

Page of Transcript

der. The patents which I show on this Chart E are Lutz, 2,606,541, Leja 2,559,079, Sawtelle, 1,242,985, Forster 2,404,833, Jacobi 2,157,666, Bakke 2,627,940. And these patents all appear upon page E which I have labelled "Defendant's Chart Showing *That Constructing Engines with an Integrally Cast Crankcase and Cylinder is Old in the Engine Art* as disclosed by *Examples of Prior Art Patents*". This Chart actually illustrates the principles which are illustrated by the Defendant's V8700 Engine, Exhibit 8 which appears before me. That simply shows that it is old to put integral casting crankcases and cylinders together, and I will not go any farther on this particular chart.

527 Now, I will refer to page F, Chart F, Defendant's Exhibit 63. In this chart appears the label, "Defendant's Chart Showing *That it is Old to Form an Engine Crankcase with a Removable Wall at the Power Take-off End of the Crankshaft* as disclosed by *Examples of Prior Art Patents*". Now, on this particular chart what I did was to select three prior art patents which show the concept of removing the wall through which the power take-off end of the crankshaft passes and to show the concept that in each case this removable wall functions as an oil sump, and is provided with a boss which serves as a bearing for the crankshaft. Now, I am not going into detail, I will simply read the names and indicate that in each of these patents I have colored in red the removable bottom wall. The patents which I have mentioned are Farr 2,357,942, Bosma 2,630,881, and Bakke, 2,627,940. The Patent to Bakke shows particularly well in Figure 4, which is the lower right-hand figure of Page F. The removable bottom wall, which is colored red, which functions as an oil sump and which is provided with a

boss which extends above the level of the oil and supports the crankshaft. Now, on this particular patent you will note there is a portion which is removable, so that the bottom, which is removable, on the Bakke
528 Patent actually sits on the red area, and in addition is provided with the red area; cover 19. Now, the red area, which I have marked on the Bakke Patent drawing, is provided with both accommodations. Referring to Figure 2 for a moment, which is the figure directly above Figure 4, we can see that looking down on a top view of the removable cover that on each of the corners is a circular opening which is provided for the purposes of using bolts or pushing bolts through the opening to assemble the engine to the deck of a lawnmower or other object. And I think Figure 1 shows the engine frame coupled to the deck of some object. Now, the reason I have set up Chart F was to show that the removability of that portion of the crankcase of the engine, which is located at the power take-off end of the crankshaft, is not new in the engine arts. And I would like to further emphasize my opinion that when the two engines are assembled, when the VS700 Engine is assembled and the engine of the Lechtenberg Patent is assembled, all of the elements are assembled and functioning in their respective and known positions and provide the known results, and that for the purposes of this assembly we know that there are prior art patents which I have shown as an example on Chart F, which show the removability
529 of the crankcase wall at the power take-off end of the shaft. I am of the opinion and understanding that the Bakke Patent, which is shown on Chart E and Chart F, illustrates both the removable power take-off plate and also the use of an integrally cast cylinder and crankcase.

Page of Transcript

The boss which I am now pointing to on Defendant's Exhibit D-8 is a relatively large-sized boss extending upwardly from the bottom of the crankcase wall, and it is provided with reinforcing fins, is in my opinion the equivalent or the same as the boss 156 shown in the Lechtenberg Patent. That boss on Exhibit D-8 serves and functions as a bearing for the crankshaft and also secondarily, because of its height above the bottom wall, functions as a means to prevent oil from leaking out of the oil sump through the port of the boss. Boss 156 of
530 the Lechtenberg Patent serves as a bearing or support for the crankshaft and also incidentally, so far as I can see in Figure 5, rises high enough above the level of the sump base so as to likewise prevent oil from draining out of the sump through the port in the boss. On the Exhibit D-8 I find a low boss, which is to one side of the high boss I have previously described, which corresponds to the boss 20 in the Lechtenberg Patent. The boss 20 of the Lechtenberg Patent functions to support the camshaft of the engine and acts as a journal bearing for the end of the camshaft.

531 Directing attention to Plaintiff's Exhibit 16a and these various covers appearing on panel 15, such as 15, 15a, 15b, 15c, 15d and 15e, and 15f, their primary use, so far as I can say, is to cover an opening in the crankcase wall and to support the crankshaft. I don't know the exact uses of each one of these covers. Those covers and
532 the baseplate shown in Exhibit D-8, which is integral with the crankcase, both primarily function as a side to close up the opening which would otherwise appear in
533 the crankcase. Now, one prior requisite of the cover-plate is, it must be large enough so it encloses the crankcase. So far as I can see, whether it was integral or bolted

on you still have a cover, you still have a wall, which would cover what would otherwise be an opening. After you have made that plate of sufficiently large area to cover that opening I imagine you may then cover the outside portion of the plate to suit your own convenience.

• • •

This portion of the patent to Felix No. 1,276,891, Exhibit D-66, discloses a removable end plate, and the disclosure is as follows, "One important feature of my invention is the removability of the main shaft and the two camshafts, without disturbing the other elements, and this is accomplished as follows: There are two removable end plates 36 and 37" — and I think we can see that in Figure 2 of the patent — "bolted at 38 respectively to and complementing the end plates 6 and 7, and at 39 to the ends of the cover plate, and each removable end plate has bearings for the three shafts mentioned," — I think we can refer to Figure 2 in the structure which I have just read. The patent further discloses: The camshafts having gears 35 beyond one end plate, the main shaft having a half-sized gear 34, and an idle gear 33 connecting them as best seen in Fig. 4. Examining Fig. 2 of the Felix Patent, Exhibit D-66, there is a bottom wall cover in that patent which is removable from the engine housing. That wall carries a bore for the crankshaft which projects through it. In this patent to Felix, I would assume that that bottom wall coverplate, indicated by the numeral 7 in Fig. 2, may be removed and replaced with a different sized cover plate so as you would have enough coverplate to cover the area of the open bottom, but I don't know. Whatever plate you replace plate 37 of Felix with, the plate must be big enough to fit over the opening, and must also have an opening through which the crankshaft can pass. And I would as-

Page of Transcript

sume that aside from that the plate could otherwise be made any size or shape outside of that area, I don't know exactly. No, as I recollect, having read it some time ago,
539 I never saw anything in the Felix Patent that would indicate it can't be done.

* * *

553 Referring to Claim 1 of the Lechtenberg Patent, there appears what I would call a preamble. It runs from line 69 to the colon at line 78. And I would think the claimed structure is that which follows the colon. The claimed elements, so far as I can see — and by this I am not attempting to point out the novelty, if any, claimed — "The cylinder and all portions of the crankcase including the wall thereof remote from and facing the cylinder, except that wall of the crankcase which carries the bearing for the power take-off end of the crankshaft is a single casting." To me that expression indicates an integral crankcase and cylinder which has an open wall at the power take-off end of the crankshaft. Now, continuing:
554 "And further by the fact that said wall of the crankcase which carries the bearing for the power take-off end of the crankshaft is provided by a cover secured to said casting." I will stop there. The second element in this claim is the cover element which functions apparently as a cover and which also functions to carry the bearing for the power take-off end of the crankshaft. I stop there because the subject matter that follows is what we would call a functional statement. Suppose I read that and show what I mean: "So that said cover is interchangeable with others of different design to adapt the engine to any of a variety of different installations without necessitating alteration of the cylinder-crankcase casting." Now, that phrase I have just read is a statement of use or function, or what have you, but it does not include

any positive structure in the claim. It does not add anything to the structure of the claim which precedes it, and I imagine since all it is is a descriptive element explaining the function, or explaining the purpose in great detail without going into any more structure I
555 imagine you could leave that off very safely and not affect the contents of the claim. Now, my statement as to preamble there, applies to the succeeding claims that are in issue in this case and which are included in that Lechtenberg Patent '789.

* * *

557 To alter Defendant's Exhibit D-8 to correspond with the structure of the Lechtenberg Patent '789, the removable sideplate of Defendant's Exhibit 8 would be made integral or one piece with the crankcase, and the bottom wall as the engine stands in this position with the cylinder horizontal would be cut off, and I think I should illustrate that by reference to my Chart A in Defendant's Exhibit 63, where I have colored in with red lines that
558 portion of the engine crankcase which could be cut off in order to obtain the same structure and the same type of structure as disclosed in the Lechtenberg '789 Patent. When the D-8 is modified in that regard, in my opinion Exhibit D-8 would then function and operate identically with the functioning and operation of the structure disclosed in the Lechtenberg Patent '789.

559 *Cross Examination*

* * *

566 A. In 21c I think I made it pretty plain that the cam surface was not on the arcuate arm. If I didn't make it plain, I would like to make it plain now.

Q. Didn't say about it being on the arcuate arm, it naturally moves along with the arcuate weight?

Page of Transcript

A. No, I wouldn't say that, either, because the arcuate weight responds to centrifugal force and moves outwardly on the axis of rotation of the camshaft, whereas the cam surface of this exhibit 21c, which is on the collar, moves radially to the camshaft. Now, that moves in
567 response to cam and not in response to centrifugal force.

• • •

569 Claim 5 of the Madle Patent does not define the specific type of movement made by the motion transmitting connection between the cam follower and the movable breaker point.

570 So far as I recall, in the Clinton Engine, which is the 2500 Engine, embodying the unit, Plaintiff's Exhibit 21c which I have in my hand, there is a driving connection between the crankshaft and the camshaft.

• • •

575 In the Clinton 2500 Engine embodying the unit Plaintiff's Exhibit 21c, there is a driving connection between the crankshaft and the camshaft. This driving connection
576 is a motion transmitting device. I think you are right, it is true then that a motion transmitting connection need not be a rigid connection. The connection between the cam follower and the movable breaker point in the Clinton accused engine, that is, the 2500 engine, is a motion transmitting connection, but not within the disclosure of the Madle Patent.

• • •

578 I don't know how the particular breaker cam inside of that magneto of the Clinton V8700 engine, Defendant's Exhibit D-8, is lubricated. I didn't check the magneto. I didn't know whether it was involved in this suit. I will say I have checked magnetos of the same type and there are apparently different types used; and

Page of Transcript

579 I did notice on one of these magnetos which I checked in the Clinton plant there was a wiper provided inside the magneto, and since it was not involved in the lawsuit and since it is not shown on my print and I made no attempt to discuss the magneto on the V8700 Engine, I can't say with surety exactly how that particular model D-8 is lubricated. The wiper is a common type of lubricating magneto cams.

It is true that the result performed by the Defendant's entire accused breaker point structure, as represented by an engine embodying the parts here as Plaintiff's Exhibit 21a, 21b, 21c, and 21d, is the same as that performed by the structure of the Madle Patent, because
580 the function of that breaking and timing mechanism advances and retards the sparks. Now, that function is performed in all of the prior art patents which I have
581 discussed yesterday. The function of the timing mechanism in these devices is to advance and retard the spark, and this is the same function in various prior art timing devices.

The Court: I don't think you need to add about the prior art.

The Witness:

Now, referring to the accused 2500 engine, it is true that in that structure the breaker mechanism 21d is located remote from the flywheel and in a position where it may be readily adjusted and replaced. In the same engine it is true that the moving parts are located within an oil zone of the engine where they are thoroughly lubricated. It is true in the same engine that the breaker mechanism, the electrical mechanism per se, is located outside of this oil zone.

• • •

Page of Transcript

587 As the Bakke patent is illustrated in my charts and in the patent drawing the crankshaft itself probably could not be able to be pulled out of the bottom along with the assembled bottom wall. Because in the patent drawings the opening, which I think is designated as 16 in which the adapting plate 19 fits, does not seem to be quite wide enough to accommodate the full construction
589 of the crankshaft. Now, it would be impossible to secure that in place in a structure such as shown in Figure 4 of the Bakke Patent. There is no way to reach in there.
590 To my recollection there is no showing anywhere else in the patent of a structure whereby that can be accomplished.

I went to work in the Patent Office in September, 1949. And left in September, 1952. During that time I worked in division 53. We were concerned with a class known as panels, partitions and closures, flexible and portable. The division itself handled several classes. I also handled several classes within the division. I handled class 160 which I gave the title of, Panels, Partitions, Enclosures, Flexible and Portable. Then I handled a class related
591 to article carriers, 224. I also handled Class 281, 282 and 283, which together deal with printed materials and manifolds of various types. That had nothing to do with engines.

FINDINGS OF FACT, CONCLUSIONS OF LAW, AND ORDER FOR JUDGMENT.

(Filed March 12, 1956)

Following the trial, filing of written briefs and arguments, and the making of oral arguments, the above-entitled case on December 21st, 1955, was submitted to the Court and by it taken under advisement. Ira Milton Jones, James R. Custin, and E. Marshall Thomas appeared as attorneys for the plaintiff. Thomas S. Donnelly and Hal F. Reynolds appeared as attorneys for the defendant. Now, to-wit, on this 12th day of March, 1956, the Court, now being fully advised in the premises, makes and enters the following Findings of Fact, Conclusions of law, and Order for Judgment.

FINDINGS OF FACT

1. The plaintiff, Briggs & Stratton Corporation, is a corporation organized and existing under the laws of the state of Delaware with its main office and manufacturing plant at Milwaukee, Wisconsin. The defendant, Clinton Machine Co., is a corporation organized and existing under the laws of the state of Michigan. Its main office is at Clinton, Michigan. It has manufacturing plants at Clinton, Michigan, and Maquoketa, Jackson County, Iowa. Jackson County, Iowa, is in the Eastern Division of the Northern District of Iowa. The plaintiff charges the defendant with patent infringement committed in this District. Jurisdiction is based upon Section 1338, Title 28, United States Code. Venue is based upon Section 1400(b), Title 28, United States Code.

2. The plaintiff and the defendant are among the leading manufacturers of light internal combustion gasoline engines and they are in keen competition in that field. The greater number of the engines manufactured by them are sold to manufacturers, assemblers, and distributors of rotary lawn mowers. They are placed on and attached to such mowers for the purpose of furnishing the motive power for them. The plaintiff concentrates upon the manufacture of a single cylinder four cycle internal combustion engine. The abbreviation V. S., as used in connection with the engines hereafter referred to, stands for Vertical Shaft.

3. The plaintiff charges the defendant with the infringement of United States Patent No. 2,605,753 issued August 5th, 1952, to Dorothy H. Madle, Administratrix of the Estate of Alain M. Madle, of which patent the plaintiff is the assignee and owner. That patent is hereafter referred to as the Madle patent. The plaintiff further charges the defendant with the infringement of United States Patent No. 2,693,789 and United States Patent No. 2,693,791 issued to L. J. Lechtenberg of which the plaintiff is the assignee and owner. Both of the Lechtenberg patents were issued on November 9th, 1954. The Lechtenberg Patent No. 2,693,789 is referred to as the first Lechtenberg patent and Lechtenberg Patent No. 2,693,791 is referred to as the second Lechtenberg patent.

4. The defendant in its answer sets up a number of defenses. The defendant also filed a counterclaim. In its counterclaim the defendant asks that it be declared that the patents relied on by the plaintiff be declared invalid for lack of patentable invention and that it be declared that the defendant was not guilty of infringement.

5. At a pretrial conference counsel for the plaintiff stated that in connection with the Madle patent the plain-

tiff relied upon Claims 2, 5, 6, and 10. At the beginning of the trial the plaintiff dismissed with prejudice as to Claims 2, 6, and 10 of that patent. As to the Madle patent the plaintiff relies upon Claim 5 thereof. That patent and claim will be first considered.

6. In gasoline internal combustion engines the mixture in the combustion chamber is ignited by means of an ignition system. Breaker points are a component part of that system. One of the breaker points is fixed and the other is movable. A spark is made at the time the points separate. It is necessary that the sparks be timed in accord with the speed and working of the engine.

7. Claim 5 of the Madle patent is given in the form set forth by the plaintiff. In the patent that claim appears without the breaks and numbers hereafter appearing:

Claim 5

In an ignition system for a single cylinder four cycle internal combustion engine of the type having a crankshaft driven magneto for effecting spark plug operation:

1.	fixed and
2.	movable breaker points
3.	accessibly mounted on the exterior of the engine remote from the magneto;
4.	a cam follower movably supported by the engine

5.

remote from the breaker points;

6. a motion transmitting connection between the cam follower and the movable breaker point

such that separation of the points is effected by motion of the cam follower in one direction;

7. a rotatable part adjacent to said cam follower;

8. a driving connection between said rotatable part and the engine crankshaft

whereby the speed of rotation of the crankshaft determines the speed of rotation of said rotatable part;

9. a member carried by said rotatable part for rotation therewith and for motion relative thereto in response to centrifugal force; and

10. a cam surface on said member engaged by said cam follower

for imparting motion to the cam follower in said direction once each revolution of the rotatable part to effect breaker point separation at instants depending upon the speed of crankshaft rotation and the position of said member relative to the rotatable part as determined by the centrifugal force acting on said member.

8. In the Madle patent reference is made to the following patents:

Number	*Name*	*Date*
1,224,247	Wacker	May 1, 1917
1,291,216	Smith	Jan. 14, 1919
1,463,958	Kettering	Aug. 7, 1923
1,636,017	Smith	July 19, 1927
1,736,431	Hendrickson	Nov. 19, 1929
1,904,368	Harmon	Apr. 18, 1933
2,013,541	Littlefield	Sept. 3, 1935
2,215,106	Letebvre	Sept. 17, 1940

9. The defendant gave notice of many prior art patents in connection with the Madle patent. It introduced into the evidence a substantial number, but not all, of the patents of which it gave notice. The following were the patents introduced into evidence by the defendant in connection with the Madle patent:

Number	*Name*	*Date*
740,781	Sturtevant	October 6, 1903
780,221	Packard	January 17, 1905
798,992	Cochran	September 9, 1905
810,963	Motsinger	January 30, 1906
816,083	Farwell	March 27, 1907
857,715	Brillie	June 25, 1907
863,151	Churchill	August 13, 1907
909,290	Riker	December 8, 1908
1,239,689	Heaslet	September 11, 1917
1,265,454	Kettering et al	May 7, 1918
1,281,204	Pitts	October 8, 1918
1,291,216	Smith	January 14, 1919
1,401,058	Erickson	December 20, 1921
1,427,718	Brown	August 29, 1922
1,430,524	Kettering	September 26, 1922
1,463,958	Kettering	August 7, 1923
1,465,644	Kettering	August 21, 1923
1,636,017	Smith	July 19, 1927
1,792,089	Hardman	February 10, 1931
1,983,972	Davis, Jr.	December 4, 1934
2,013,541	Littlefield	September 3, 1935
2,215,106	Letebvre	September 17, 1940
2,388,994	Phelon	November 13, 1945
Foreign Patent		
310,082	British	April 22, 1929

10. It is the claim of the plaintiff that an engine manufactured by the defendant known as V. S. 2500 infringed Claim 5 of the Madle patent. The defendant asserts that Claim 5 does not disclose patentable invention. It further asserts that the accused engine does not infringe that claim.

In the plaintiff's brief (pp. 6-8) the plaintiff states as hereafter set forth in regard to the invention defined by Claim 5:

> "The Madle patent relates to a magneto ignition system for a single-cylinder four stroke cycle internal combustion engine, and, so far as is material to this case, it refers more particularly to means for actuating the movable breaker point in such a magneto ignition system.
>
> "Without going into technical detail, the breaker points in an internal combustion engine comprise a pair of electrical contacts which separate or 'open' to cause a spark to jump across the spark plug electrodes. Since sparking of the plug follows instantaneously upon opening of the breaker points, breaker point opening must be timed quite accurately in relation to the rotational position of the crankshaft in order to insure that ignition of the fuel-air mixture charge in the cylinder will occur at the proper instant in the cycle of engine operation. (R. 183-184) When the engine is being started, the spark should occur relatively late in the cycle, near the instant when the piston reaches top dead center at the end of its compression stroke, but as the engine increases speed the spark should occur a substantial time before this top dead center position.
>
> "Mechanisms were known, even before the Madle invention, for automatically advancing the spark with increasing engine speed, and this was usually accomplished by means of a centrifugally responsive

mechanism which took advantage of the fact that the centrifugal force on a rotating part increases with increasing rotational speed. Prior to the Madle invention, however, all such automatic spark advance mechanisms had one or more of the following important disadvantages:

> "(1) An external lubrication system, separate and additional to that inside the engine crankcase, was required for the breaker point actuating cam and other rotating or rubbing parts in the breaker actuating mechanism. One conventional expedient for effecting lubrication was a wiper or wick at the exterior of the engine which required service from time to time. (R 578-579)
>
> "(2) The breaker points in single-cylinder engines were usually mounted behind the engine flywheel, that is, between the flywheel and its adjacent crankcase wall. Located in this position, the points could not be readily serviced or replaced. Access to the points usually necessitated removal of the blower housing and then detachment of the flywheel from the crankshaft by means of a pulling tool.
>
> "(3) The breaker point actuating cam was usually mounted on the engine crankshaft and therefore rotated at crankshaft speed, causing the breakers to produce an unnecessary spark during each cycle of engine operation.

"Madle's invention was the conception of a simple structure which not only avoided every one of these disadvantages of past mechanisms but in addition was efficient, compact and trouble-free. (R 187-188)

"By mounting the breaker actuating cam on the camshaft, instead of on the crankshaft, Madle was able to make the breaker points open only once during each engine cycle, eliminating the unnecessary spark which occurred with a crankshaft mount-

ed cam and which shortened the life of spark plugs and breaker points. By mounting the flyweight, which actuates the cam for angular movement, on the camshaft, Madle not only achieved simplicity and compactness, utilizing the camshaft for a dual function, but, more important, he disposed the rotating and rubbing parts inside the engine crankcase where they operated in a constant spray or mist of engine lubricating oil thus obviating the need for any external lubrication system such as the wiper or wick which had theretofore been considered necessary. And by employing a simple motion transmitting connection between the movable breaker point and the cam follower inside the crankcase, Madle was able to mount the breaker points in a readily accessible location on the exterior of the engine, where they would not be likely to have oil deposited upon them."

In the plaintiff's rebuttal brief (p. 6) the plaintiff makes the further statement:

> "Defendant has ignored two key phrases in claim 5 which point directly to the invention covered thereby. The breaker points are defined as mounted on the exterior of the engine '*remote from*' the magneto; and the cam follower is defined as '*remote from*' the breaker points. For a correct understanding of the claim, these expressions cannot be disregarded."

11. The question for determination is as to what patentable invention is shown by Claim 5 and the engine manufactured in accord therewith. Fixed and movable breaker points were not new. The advancing and retarding of a spark in proportion to the speed of the engine was not new. A camshaft driven at one-half of the crankshaft speed was not new. The placing of the breaker points outside of the crankcase and remote therefrom was not new. If Claim 5 is construed to be limited to a cam

and cam follower within the crank for actuating the timing mechanism so that the cam and cam follower would be lubricated (which is doubtful), such construction was disclosed in the prior art. A "cam follower movably supported by the engine remote from the breaker points" was not new. A "motion transmitting connection between the cam follower and the movable breaker point such that separation of the points is effected by motion of the cam follower in one direction" was not new. A "rotatable part adjacent to said cam follower" was not new. A "driving connection between said rotatable part and the engine crankshaft whereby the speed of rotation of the crankshaft determines the speed of rotation of said rotatable part" was not new. A "member carried by said rotatable part for rotation therewith and for motion relative thereto in response to centrifugal force" was not new. A "cam surface on said member engaged by said cam follower" was not new. In Claim 7 of the Madle patent, a claim not relied on by the plaintiff in this case, after referring to the cam, it is stated: "... said cam overlying the opposite face of the member so that the member is interposed between said cam and the arm to guide the arm in its swinging motion; ..." No similar statement occurs in Claim 5. In none of the prior art patents is the cam mounted on one side of the gear and the swingable centrifugally actuated arm on the other side of the gear. However, if Claim 5 be construed to include that feature, such location would be a matter of engineering choice rather than of patentable invention. It is not clear that the plaintiff claims that the location of the parts referred to constituted patentable invention.

12. The elements set forth in Claim 5 and contained in the plaintiff's engine manufactured in accord with

that claim were old and well known. However, the fact that all of such elements are old does not prevent them, when considered as a whole, from constituting patentable invention. After considering Claim 5 from that viewpoint, the Court is of the view and finds that Claim 5 is an aggregation of old elements which, in the aggregation, perform and produce no new or different function or operation than that theretofore performed or produced by them.

13. As heretofore noted, it is the claim of the plaintiff that the defendant's V8100 engine infringes Claims 1, 2, 4, 5, 6, 7, 8, 14, 15, and 16 of the first Lechtenberg patent, No. 2,693,789. That patent cites the following references to patents:

Number	*Name*	*Date*
1,447,245	Gore	Mar. 6, 1923
1,463,958	Kettering	Aug. 7, 1923
2,152,666	Jacobi	May 9, 1939
2,249,319	Lohner	July 15, 1941
2,256,002	Molnar	Sept. 16, 1941
2,305,186	Muenk	Dec. 15, 1942
2,375,718	Winkels et al.	May 8, 1945
2,404,833	Forster	July 30, 1946
2,424,416	Pirv	July 22, 1947
2,511,823	Klotsch	July 13, 1950
2,559,079	Leia	July 3, 1951
2,569,461	Dingman	Oct. 2, 1951
2,583,466	Brownlee	Jan. 22, 1952
2,590,134	Slonneger	Mar. 25, 1952
2,606,541	Lutz	Aug. 12, 1952
2,630,881	Bosma	Mar. 10, 1953
2,669,322	Brown	Feb. 16, 1954

Foreign Patents

Number	*Country*	*Date*
32,802	Netherlands	May 15, 1934

The defendant gave notice as to a number of claimed prior art patents in connection with the first Lechtenberg patent. It introduced the following into evidence:

Number	*Name*	*Date*
*1,242,985	Sawtelle	Oct. 16, 1917
2,157,666	Jacobi	May 9, 1939
*2,357,942	Farr	Sept. 12, 1944
2,404,833	Forster	July 30, 1946
2,559,079	Leja	July 3, 1951
*2,627,940	Rakke	Feb. 10, 1953
2,606,541	Lutz	Aug. 12, 1952
*2,346,148	Bosma	April 11, 1944
2,630,881	Bosma	March 10, 1953
*1,276,891	Felix	Aug. 27, 1928

Those marked with an asterisk were not included in the patents to which reference was made in the patent. Those not so marked were referred to in the patent.

Claims 1, 2, 4, 5, 6, 7, 8, 14, 15, and 16 of the first Lechtenberg patent are as follows:

[Quotation of claims omitted]

14. The plaintiff, following extensive experiments in January, 1953, placed on sale a die cast aluminum one cylinder four cycle air cooled gasoline engine. Soon thereafter the defendant brought out its VS100 engine which is the accused engine. The structure of the plaintiff's engine is in accord with the disclosure contained in the first Lechtenberg patent. The plaintiff's engine met and is meeting with marked commercial success. In the plaintiff's engine the crankcase and cylinder is cast as one integral unit. That unit is the main and most expensive part of the engine. Engines of the type here involved have a cover casting which is removable. In the plaintiff's engine the removable cover is at the bottom of the engine with the crankshaft protruding through it. Engines of the type here involved are designed to be

installed on other pieces of equipment to furnish the motive power for them. It is indicated that there are 36 possible uses to which engines of the type here involved may be put. Engines of the type here involved are installed on various decks or platforms of various types and kinds of equipment. The plaintiff's bottom cover casting is interchangeable with shapes of covers of different designs so as to adapt the engine to a variety of installations without any alteration in the cylinder crankcase casting. By using aluminum the plaintiff substantially reduced the weight of the engine. By die casting the plaintiff reduced the cost of the engine. By means of the bottom cover the plaintiff greatly increased the adaptability of the engine. It is clear that the plaintiff's engine is light, compact, reasonably priced, highly adaptable, and outstanding in its field. The question for determination is whether the structure disclosed by the first Lechtenberg patent discloses patentable invention, or merely a high degree of artisanship.

15. The casting of the cylinder and crankcase as an integral unit was not new. The die casting of engine parts was not new. The use of aluminum was not new. Having one wall of the engine removable was not new. Having the bottom cover of the engine removable was not new.

The patent discloses a separation of the bottom cover casting and the cylinder crankcase casting in such a way and manner that all of the constants are in the main and the more expensive casting and all of the variables are in the inexpensive bottom cover casting. That feature was not disclosed in the prior art and was new. The Court finds that such disclosure constituted patentable inven-

tion. Such disclosure appears more specifically and definitely in some of the claims than it does in others, but it more or less inheres in all of the claims.

16. The Court finds that the other disclosures in the patent did not constitute patentable invention in view of the prior art.

17. The defendant claims that in the prosecution of the application for the patent pertinent prior art was concealed from the Patent office. The Court finds that no pertinent prior art was concealed from the Patent Office in connection with the patent.

18. The defendant's engine VS100 is a striking copy and imitation of the structure disclosed by the patent. It is clear and the Court so finds that the defendant's engine VS100 reads on and infringes the claims in question as to the patentable invention found to have been disclosed by them.

19. The Court finds that there is no file wrapper or other estoppel which estops the plaintiff from asserting the claims in question as to the patentable invention found to have been disclosed by them.

* * *

29. The Court finds that the circumstances are such that no award of attorney fees shall be made to either the plaintiff or the defendant.

30. The Court finds that the circumstances are such that each party should be assessed one-half of the taxable costs.

CONCLUSIONS OF LAW

1. This Court has jurisdiction of the parties to this action and of the action.

2. Claim 5 of Madle Patent No. 2,605,753 is invalid as lacking in invention over the prior art.

* * *

4. Claims 1, 2, 4, 5, 6, 7, 8, 14, 15, and 16 of Lechtenberg Patent No. 2,693,789 are valid as to the patentable invention found to have been disclosed by them.

5. Lechtenberg Patent No. 2,693,789 was validly issued.

6. Claims 1, 2, 4, 5, 6, 7, 8, 14, 15, and 16 of Lechtenberg Patent No. 2,693,789 are infringed by the defendant's accused VS100 engine.

7. The plaintiff is entitled to a judgment against the defendant for damages and profits for such infringement and for an injunction restraining such further infringement by the defendant.

8. No attorney fees should be awarded to either party.

9. Each party should pay one-half of the taxable costs of this action.

ORDER FOR JUDGMENT

It is hereby ordered that judgment shall be entered adjudging, decreeing, and declaring:

1. that Claim 5 of Madle Patent No. 2,605,573 is invalid;

* * *

3. that Claims 1, 2, 4, 5, 6, 7, 8, 14, 15, and 16 of Lechtenberg Patent No. 2,693,789 are valid;

4. that such claims are infringed by the defendant's accused VS100 engine;

5. that the plaintiff have judgment against the defendant for damages and profits for such infringement, such damages and profits to be later determined with the Court retaining jurisdiction for such determination;

6. that the defendant be enjoined and restrained from such further infringement;

7. that no award of attorney fees be made to either party;

8. that each party shall pay one-half of the taxable costs;

9. that the proceedings under the judgment be stayed until April 16th, 1956.

/s/ Henry N. Graven
Henry N. Graven
United States District Judge

The above is a true copy.

Attest:

Lee McNeely, Clerk.

By

Deputy Clerk

JUDGMENT

(Filed March 12, 1956)

Following the trial, filing of written briefs and arguments, and the making of oral arguments, the above-entitled case on December 21st, 1955, was submitted to the Court and by it taken under advisement. Ira Milton Jones, James R. Custin, and E. Marshall Thomas appeared as attorneys for the plaintiff. Thomas S. Donnelly and Hal F. Reynolds appeared as attorneys for the defendant. On March 12th, 1956, the Court filed herein its Findings of Fact, Conclusions of Law, and Order for Judgment. Now, therefore, in accord with such Findings, Conclusions, and Order;

1. *It is hereby adjudged, decreed, and declared* that Claim 5 of United States Patent No. 2,605,573 issued August 5th, 1952, to Dorothy H. Madle, Administratrix of the Estate of Alain M. Madle, is invalid.

• • • •

3. *It is hereby adjudged, decreed, and declared* that Claims 1, 2, 4, 5, 6, 7, 8, 14, 15, and 15 of the United States Patent No. 2,693,789 issued November 9th, 1954, to Leo J. Lechtenberg are valid.

4. *It is hereby adjudged, decreed, and declared* that such claims are infringed by the defendant's accused VS100 engine.

5. *It is hereby adjudged, decreed, and declared* that the plaintiff have judgment against the defendant for damages and profits for such infringement, such damages and profits to be later determined; and that the Court retains jurisdiction for the making of such determination.

6. *It is hereby adjudged and decreed* that the defendant be and it is hereby enjoined and restrained from infringing those claims.

7. *It is hereby adjudged* that no award of attorney fees be made to either party.

8. *It is hereby adjudged* that each party shall pay one-half of the taxable costs taxed in the total sum of $.....

9. *It is hereby ordered* that proceedings under this judgment be stayed until April 16th, 1956.

Signed in the Northern District of Iowa this 12th day of March, 1956, for entry in the Eastern Division.

/s/ Henry N. Graven
Henry N. Graven,
United States District Judge

The above is a true copy.

Attest:
Lee McNeely, Clerk.

By
Deputy Clerk.

ORDER RULING ON POST-JUDGMENT MOTIONS OF THE DEFENDANT.

(Filed April 9, 1956)

On the 4th day of April, 1956, at the Federal Court House at Dubuque, Iowa, there came on for hearing the post-judgment motions of the defendant. Edwin J. Balluff, Arthur Raisch, Hal F. Reynolds, and Wayne G. Cook appeared as attorneys for the defendant in support of the said motions. Ira Milton Jones, James R. Custin, and E. Marshall Thomas appeared as attorneys for the plaintiff in resistance thereto. The said motions were then heard, submitted to the Court and by it taken under advisement. The Court, having considered said motions, is of the view that in litigation involving patents it is desirable the parties be given opportunity to present all of the evidence which they deem material or pertinent where the final decision will not be unduly delayed.

Under Rule 59 of the Federal Rules of Civil Procedure, in an action tried without a jury the Court may open up a judgment which has been entered for the purpose of taking additional evidence. The Court is of the view both of the parties should be given an opportunity to present additional evidence as to any or all of the issues as to all of the patents involved.

It is hereby ordered that the judgment heretofore entered on March 12th, 1956, be and the same is set aside in its entirety.

It is further ordered that both of the parties be and they are hereby given leave to present additional evidence as to any or all of the issues as to all of the patents involved in this litigation, including the issue as to infringement.

It is further ordered that the Court will hear such additional evidence at the Federal Court House at Dubuque, Iowa, starting on June 4th, 1956, at 10:00 o'clock A.M.

It is further ordered that save so far as the post-judgment motions of the defendant are not granted or rendered moot by this Order they are overruled and denied.

Done and Ordered at Dubuque, Iowa, this 9th day of April 1956.

/s/ Henry N. Graven
Henry N. Graven,
United States District Judge

The above is a true copy.

Attest:
Lee McNeely, Clerk.

By .
Deputy Clerk.

INDEX TO VOLUME II

Page

Supplemental Trial Proceedings— June 4-6, 1956

Evidence for Plaintiff

Hugh S. Brown
— Direct Examination 209
— Cross Examination 210

Harry Shore
— Direct Examination 212
— Cross Examination 225
— Redirect Examination 238
— Recross Examination 241

Evidence for Defendant

Deposition of Harold E. Bruns
— Direct Examination 243
— Cross Examination 250
— Redirect Examination 252

Stipulation 256

Clarence P. Damon
— Direct Examination 257

Stipulation 258

Clarence P. Damon
— Direct Examination (Continued) 260

Stipulation 261

Clarence P. Damon
— Direct Examination (Continued) 264

Stipulation 264

Clarence P. Damon
— Direct Examination (Continued) 267

	Page
Carl Wolcott	
— Direct Examination	268
— Cross Examination	293
Cletus V. Erlacher	
— Direct Examination	294
Clarence P. Damon (Recalled)	
— Direct Examination	322
— Cross Examination	335
— Redirect Examination	340
Rudolph L. Lowell	
— Direct Examination	341
— Cross Examination	364
Leo J. Lechtenberg (Adverse)	
— Direct Examination	368
— Cross Examination	385
— Redirect Examination	385
Rebuttal Evidence for Plaintiff	
— Stipulation	386
Leo J. Lechtenberg	
— Direct Examination	388
— Cross Examination	391
Harry Shore	
— Direct Examination	396
Harold E. Bruns	
— Direct Examination	397
— Cross Examination	397
Hugh S. Brown	
— Direct Examination	398
— Cross Examination	399
— Redirect Examination	402

Page

Deposition of Warren C. Conover
— Direct Examination 402
— Cross Examination 404

Joseph Robert Harkness
— Direct Examination 408
— Cross Examination 410

Ernest A. Longenecker
— Direct Examination 414
— Cross Examination 428
— Redirect Examination 432

Surrebuttal Evidence for Defendant

Clarence P. Damon
— Direct Examination 433

Harold E. Bruns
— Direct Examination 434

Cletus V. Erlacher
— Direct Examination 435

Re-rebuttal Evidence for Plaintiff

Ernest A. Longenecker
— Cross Examination 436

Findings of Fact, Conclusions of Law and Order for Judgment 438

Judgment 463

Notice of Appeal 464

Notice of Cross-Appeal 465

Relevant Docket Entries in District Court 466

Page

EXHIBITS

Defendant's Exhibits

D- 96 — Pages from H. H. Doehler: *Die Casting* 273

D- 98 — Pages from *Designing for Alcoa Die Castings* 283

D-105 — Article from *Southern Hardware*, January, 1951 297

D-109 — Reprint from *Electrical Merchandising*, June, 1951 305

D-110 — Reprint from *Electrical Merchandising*, January, 1956 313

Note: All patent copies are included in Volume III and are separately indexed in that volume.

Page of Transcript

SUPPLEMENTAL TRIAL PROCEEDINGS

June 4, 5, 6, 1956

• • •

22 HUGH S. BROWN

Direct Examination

23 My name is Hugh S. Brown, I am 59 years old, I live at 2020 Two Tree Lane, Wauwatosa, Wisconsin; I am vice-president in charge of engineering of the Briggs & Stratton Corporation in Milwaukee. I am the same Hugh S. Brown who has testified previously in this case. I have seen the motion picture which was just played in the court room, and which has been identified as Plaintiff's Exhibit 23 for identification. It was prepared 24 at the instruction of Mr. Jones. We at Briggs & Stratton arranged for its production, and I, in particular. I have had occasion to go through the factory of the General Maleable Company at Waukesha, Wisconsin. I went through every operation that was shown in the film. The film shown this morning accurately portrays the operations that I saw. The camera man went out to General Maleable with me and we went over it generally. I was not there when the picture was actually taken, but I told them what to take. The film shows 26 the conventional operations in the Briggs & Stratton plant. There may be changes from day to day, but that would show any reasonable day, let's say. The nature of those changes would be the changes on the lines or assembly. They assemble different kinds of engines different days, and different ways, different models; they are not all the same.

Cross Examination

With respect to the practices for sand casting the engine that was shown in the photograph, there were no deviations shown in the photographs which are not the
27 usual practice in sand casting those engines. I would say that movie correctly reflects the practice in connection with the sand-casting of that engine prior to the time of the Lechtenberg patent. There might have been minor modifications, but none that I would notice.

28 Now, with respect to the die-casting part of the film, the steps there shown do not reflect any deviation from the usual and customary practices of Briggs & Stratton in die casting its engine block. They vary with the methods in the assembly room but nothing else. As to the die casting, we have different kinds of machines, I mean, they would not be all exactly the same machines but they would use the same molds and everything. For die-casting the light weight engine I am not positive, but I think we have between twelve and fourteen sets of molds. There are also many other inserts that go with the molds, so to say how many in total we have, I could not be accurate on that. It is not necessarily the usual practice in our company, in the die-casting of these engine blocks, to produce all of the die-cast blocks for vertical shaft engines in one set of molds, and all of the blocks for a horizontal shaft engine in another set
29 of molds. At first they were made in the same molds. Part of the inserts were changed so we could put feet on or take them off at will. The movie didn't show the steps of changing the molds. The mold shown in the movie, for die-casting, was the vertical crankshaft engine only.

Page of Transcript

30 It is the usual practice of our company, in assembling these light weight engines, to run horizontal blocks and vertical shaft blocks down the same line. I wouldn't say it is alternately. The lines are provided so they can run either engine down any one they want to run them. The assembly lines shown in the movie show horizontal and vertical blocks alternately but I would say that we very rarely do it. Oh, they run them down mixed up, but I don't know whether they would have every other one. I mean, it might vary. I wouldn't say it is usual practice to alternate. And in assembling the cover to the blocks, as illustrated in the movie, you have covers which are especially made for that horizontal shaft block.

31 I should clarify that. It is possible to put on the horizontal cover on a horizontal crankshaft engine where the engine is going to be set in that position. I wouldn't say it was usual, no. It is not usual to put them on vertical shaft blocks. It is done, in the assembly of these engines, to put a cover for a vertical shaft block onto a horizontal shaft block, as a matter of practice, but that is not usual. The usual practice is the vertical shaft cover going onto the vertical shaft block, and the horizontal shaft cover going onto the horizontal shaft block. There were many

32 steps in the assembly of the light weight engine that were not shown in that movie, there were many of them.

Mr. Balluff: Well, Your Honor, I would like to renew my objection on the grounds stated, and in addition I renew the objection with respect to the die-cast movie on the ground that it does not conform to the usual practices of the Plaintiff, and in addition that there are many steps with reference to the assembly that are not shown in the photographs in the movie.

The Court: The objection is overruled. The relevancy of the testimony and the weight to be given will be matters to be determined by the Court.

33 *Mr. Jones:* I am not quite sure as to whether the Defendants admit the claims in suit read on the Defendant's structure. You remember we had quite some discussion at the rehearing, as I recall.

The Court: Well, the Court intended to relieve them of that stipulation. They may state of record what it is they claim — I mean, as Mr. Donnelly stated that if the patent was valid there was no question of infringement. I now understand they are questioning the infringement. Is that right?

Mr. Balluff: You are right, Your Honor.

---

34 HARRY SHORE

Direct Examination

My name is Harry Shore, fifty years old, live at 230 Cummings Avenue, Elberon, New Jersey, and I am employed as the Chief of the Bureau of Engineering Branch,
35 Power Source Division, of the Signal Corps, Engineering Laboratories, at Fort Monmouth, New Jersey. I have held the present position for the past two months. Prior to that time I was Chief of the Bureau, Unit Section, of the Power Sources Branch of the Signal Corps. I received the degree of Electrical Engineer from the Brooklyn Polytechnic Institute of New York in 1927. I received a professional engineer's license from the state of New York in 1931. Upon graduation from Brooklyn Polytechnic, I was employed by the Consolidated Edison Company of New York as an engineer in high tension

Page of Transcript

feeder transmission within New York City for that period was from 1927 to 1931. From 1931 to 1942 I was employed by the City of New York as an engineer in the Department of Transportation and was engaged in electrical signal designing for the New York City Rapid Transit System. From November, 1942, to the
36 present time, I have been engaged as an engineer in the Signal Corps Engineering Laboratories, primarily concerned with power unit work.

The Signal Corps is a prime furnisher of communication radar and meteorological equipment used by the Army predominately in tactical field operations. Necessary to insure the satisfactory operation of these equipments there must be furnished integral power sources furnishing electricity to operate these communications equipments and their electrical equipment. My responsibilities were concerned with research and development of the power sources composed of engine generating and motor generating equipment required to operate the communication and electrical equipment.

The Signal Corps to which I refer and by which I am employed is the United States Army Signal Corps. I am a civilian employee of the Signal Corps.

37 There are several types of prime movers that have been used in the field unit equipment, namely, internal combustion gasoline engines of the two-stroke and four-stroke cycle design, and diesel internal combustion engines to form the prime movers for powering the secondary movers or alternators and generators which provide electric power. I am concerned with these prime movers. The military is constantly striving to achieve equipments that will offer the greatest degree of relia-

bility under the most severe types of operating conditions that can be experienced, and in view of that consideration it is necessary to constantly contact the manufacturers regarding any improvements that they may have accomplished in advancing the state of the arts of such equipment to provide the degree of reliability necessary for military use. I personally keep myself informed of such developments by personal visits to various manufacturers in which indications have been made that they are prosecuting research or development and are in a
38 position to show advance of the state of the art, by direct contact, receipt of reports from the other military services in the Department of Defense, such as the Air Force, Navy, or other Army services like Ordnance or the Corps of Engineers. The only other government agency that I know of primarily interested in this field of small internal combustion engines is the United States Army Corps of Engineers and their respective engineering research and development laboratories located at Fort Belvoir, Virginia. Their effort to keep abreast of things is as great as our effort at the present time. I know that because the Signal Corps, being the biggest user of small engine generator sets for tactical field application, must of necessity be aware of any research and development activities undertaken by the other services, and constantly maintain liaison activity through
39 periodic visits to the service organizations and by inquiry made of liaison representatives from these services situated at Fort Monmouth.

I make constant visits to manufacturers of gasoline engines. The specifications requirements for an engine generator system is primarily dependent upon the type of application it will be put to in powering an end item,

Page of Transcript

namely, a communication radio or transmitter — radio receiver or transmitter or a radar set, and other electrical devices, based on the power requirements of these end item equipments and other characteristics concerned with the mode of operation under whatever type of field conditions or equipment is suited to operate for what period of continuous operation and other factors. The requirements for the power unit are then evolved and specification information is prepared and will include performance requirements to meet the needs of the application of the power unit source. These specifications are
40 prepared, or the information specification data is prepared, under my jurisdiction in my branch.

Within the Signal Corps Engineering Laboratory structure we have a maintenance division, responsible for the origin of the maintenance requirements, tabular parts list, stock numbering data, and other maintenance data concerned with the maintenance and operation of equipment in the field. This maintenance division constantly receives reports from the various theatres of action relating to the operation of the equipment, and basically these are in the form of unsatisfactory equipment reports which detail to the best ability of the operators of equipment criticism and observed deficiencies of operation of the equipment in the field. If unsatisfactory equipment reports are received by the Division which are of a repetitive nature, these reports are referred to my branch for an analysis and a review of methods necessary to effect corrective action in order to minimize and eliminate field deficiencies or failures. I have personal knowledge of such reports referred to my branch to the greatest extent possible. In other words, I have access at all times to these reports and the reports requiring the attention

and investigation of my branch are directed personally to me through proper correspondence channels. I delegate to engineers and technicians the various problems and to have them investigate and determine necessary measures of correction, whether they will involve a major redesign, and then take the necessary actions in advising the maintenance division of the corrective measures which must be effected; whether they can be effected in present equipment in the field or whether a design change or a specification change must be made in subsequent programs of equipment.

By virtue of the type of usage in the field where these equipments were being used during World War II, under all environmental conditions of cold, low ambient temper-
42 atures and high ambient temperatures, under rain and snow, humid conditions, a considerable amount of failure of small engines was brought to my attention, particularly in the carburetion and ignition system failures of the engine prime movers. In some cases where engines were required to start under low temperature conditions of operation it was — in many instances engines were difficult to start, and in certain instances as a result of this cold start of an engine they were damaged physically by the GI beyond the point of operation. In other instances where the humidity conditions were effective, corrosive action caused failure of breaker points in magneto assemblies preventing satisfactory ignition necessary to the successful operation of the engine. Such corrective action in many of the small engines, of servicing the breaker point assembly, was beyond the order of first or second echelon repair, or beyond the operator, and the equipment would have to be referred back to a fourth or fifth echelon repair to perform these maintenance repair

Page of Transcript

functions. But because of inaccessible design this could not be performed practically in the field.

43 During World War II a specification for cold weather starting of small internal combustion engines in itself was not used, but the requirements for cold weather operation were embodied in the specification for the prime mover or power unit. And the specifications at the time required the capability of the engine to be started in an ambient temperature of minus 25 degrees F. And after they started, to be able to operate at that temperature for long periods of operation. In some instances that specification was met. In other instances it could not be met repeatedly, and in view of the state of the art at the time waivers had to be granted in order to obtain equipment urgently needed. During the period of World War II, effectively '42 to '1945, research and development work was rather limited and deferred to a great extent because of the pressing need to obtain even commercial equipment with reasonable modification and make it as suitable as possible for military use.

45 In the period from 1945 onward my Branch instituted a program of internal and external research and development to attempt to improve the major or power unit equipment so that they would be more dependable for military application. Internal activity would be defined as that type of activity carried on within the Signal Corps Engineering Laboratory itself, using our own facilities and engineering and technical personnel to undertake programs relating to research and development in the particular related fields. External activity is one where the contracts would be given to educational and commercial industrial institutions and concerns with specific experience in the field involved to carry on a program

of research and development in the particular field we were concerned with. This program was carried on from 1945 to 1949. In this particular program on engine generator equipment, externally approximately three hundred and fifty to $450,000.00 was spent on engine development work and about $300,000.00 was spent on electrical generating development work. The Signal Corps spent that money. No, that was only for the external activity. The internal activity I could not give you exactly at the moment. The cost involved personnel consisting of approximately 35 people, both of engineering caliber and electrical technician caliber. Also a considerable expenditure of moneys in buying equipment and testing, experimentation; but in rough figures of the major test components and instrumentation I do remember spending about two hundred thousands on equipment. That was on the equipment, such as dynamic equipment and various electromagnetic electric testing instrumentation, used in the testing of engines and engine generating sets. Fifty percent of the activity of my men during this period was devoted to these particular fields. The fifty percent figure I gave was on the prime mover problem. That is the internal combustion engine.

46

Q

47

I personally instituted a patent search in the Patent Office in Washington, spending several days of my own time going over the field of carburetion and ignition system patents, and subsequent to that time in 1948 I sent one of my engineers to Washington for a period of approximately ten days to conduct a more extensive search of patents. And the result of the entire search did not disclose any patents which were related to and materially improved the state of the art. That preliminary search was not the first patent search I had ever

Page of Transcript

made. I had made several searches on elementary de-
48 vices, electrical regulators, mechanical regulators, mechanical governing devices. Now, in making the searches in connection with this search and development process on starting and operating development, we were interested in drawings that could be used to improve and provide greater reliability of starting and operating equipment when used in military application. We were not interested in the claims in those patents. The program disclosed nothing that gave us better equipment.

We were concerned with the problem up to the period of 1948, '49, and in the latter part of '49 Mr. Brown of the Briggs & Stratton Corporation made aware to me and to my Branch the programs that Briggs & Stratton had been carrying on in improving the ignition system, and they made aware to us a new automatic ignition system known as the Briggs & Stratton Magnematic
49 System, and furnished to the laboratory two sample Briggs & Stratton model 23-BS engines, incorporating the Magnematic ignition system, for the purpose of permitting the laboratories to determine whether this new ignition system was an improvement over the conventional flywheel, conventional magneto system previously
50 used. Exhibits 21c and 21d I recognize as components of the Magnematic ignition system. They are like the
51 ones I saw. From my examination of that brochure, Plaintiff's Exhibit 25, I would state that it contains a complete description of the ignition system that was presented to me and that I became familiar with under the name of Magnematic ignition system. There is nothing inaccurate about it that I know of, as a description.

Page of Transcript

52 Through our investigation and testing of the sample engines submitted in 1949 we were able to determine several advantages obtained in the new ignition system—the Magnematic ignition system, over the previous conventional flywheel magneto ignition system used in the Briggs & Stratton engines and also to be found on other manufactured single-cylinder flywheel magneto systems. These advantages I am talking about relate to starting and dependability of operation. As far as the normal operation of the engine, we found through extensive testing, and which was later borne out in field usage of new equipment, that the sparkplug life had been increased from 100-125 hour average life to a 200 to 250 hour average life, representing a 100% increase in spark-
53 plug life. I believe two important factors contributed to increase sparkplug life. One was easier engine starting, avoiding the necessity of over-choking the engine or combustion chamber which would result in excessive carbon deposits which would ultimately lead to short plug-life, and the other factor was that in the new ignition system by the use of a camshaft gear operated [at] one-half engine speed you reduce the number of sparkplug firing cycles by one-half and only providing a spark required for the necessary firing of the engine for the power stroke.

One of the most important advantages in the system was the location of the breaker point assembly externally to the crankcase or the interior of the crankcase, located on an exterior wall of the engine, permitting great accessibility to a part of an ignition system which was highly subject to necessary adjustment and maintenance. Heretofore the breaker point assembly was located within the engine proper adjacent to the crankcase wall and in

Page of Transcript

close proximity to the flywheel itself. To get at the breaker point assembly represented a disassembly problem which could not be done in the field, represented a
54 great deal of time-consuming action and in many instances because of the inaccessibility of the breaker point assembly in the field many equipments were not capable of starting because of the accumulation of a slight oxide film on the breaker points when the equipments had not been in use for a period of time; and with a simple cleaning of these points could have provided a satisfactory ignition system effecting starting of the engine. Now, as I said, with the new system, with the breaker point assembly placed on the outside of the engine, giving the greatest degree of accessibility, it was a relatively simple matter to examine the points, clean the points, and make an easy adjustment of the points and provide a greater degree of reliability of operation and starting of the engine.

One of the most important features in the new system was the feature of an automatic advancing and retarding of spark which up to that time had not been disclosed or used in single cylinder small lightweight engines. Using such an engine in the field and at low temperatures from zero degrees downward an engine is very difficult to start. Your cranking coming-in speeds are relatively
55 low and by virtue of the low speed during the cranking cycle it is very difficult to fire an engine, effect proper combustion in the combustion chamber to get the engine up to normal operating speed. In cases where you have a fixed timing of the breaker points, which normally would be designed for the basic operating speed of an engine, and you attempt to start an engine at low speed, and can't accelerate that speed of the engine quickly—

you will get a mis-firing or kick-back. With the use of a retarded spark during the starting cycle this greatly helped the proper starting of the engine, permitting a proper firing of the engine, and aiding materially in starting and operating the engine, giving you an overall greater reliability. The coming-in speed is considered a minimum speed below which an ignition system will not provide the proper voltage to fire across the spark-plug, giving you the necessary combustion of the combustible mixture within the engine cylinder. As to the relationship between coming-in speed and low ambient
56 temperature, as I explained before in low ambient temperature conditions where the lubricating oil tends to become viscous and your frictional parts sluggish, there are more difficulties in cranking an engine at the desired coming-in speed to effect proper ignition and starting of an engine.

One of the important features in this Magnematic system was that those frictional parts requiring lubrication were appropriately located within the crankcase of the engine, and those parts, like the breaker point assembly which did not require lubrication, and as a matter of fact at times would be seriously affected by a lubricating oil, were most appropriately placed outside of the engine.

"In the earlier designed engine, Model ZZ, Briggs & Stratton engine, the sparkplugs had to be partially shielded against the lead deposits and temperature prob-
57 lem involved in the design of the overall unit and the ignition system. Where in the later model Briggs & Stratton engine, the Model 23 engine, the sparkplug was more advantageously located within the cylinder head to provide a better means of firing and enhancing the life

Page of Transcript

of the plug. Several reasons brought about this better location of the plug. One reason was the fact that you obtained a spark once every two revolutions of the crankshaft instead of one spark every revolution, reducing partially the temperature condition within the sparkplug area or sparkplug well area, a type of spark advancing during the starting period of the engine, also aided in designing the location of the plug more appropriately than in the previous models.

There was another advantage. All of our equipments are required to be wired against radio interference, which could affect our communications and electronic equipments. It was found that the suppression application of the newer engine was simplified materially by the change
58 in the design of the ignition system.

As I mentioned before, we made tests on the sample models furnished to the laboratory in 1949 and in subsequent years, 1951 onward, where—for Signal Corps use more than 30,000 of the Model 23-BP Briggs & Stratton were procured. Invariably life tests of 500 hour duration, and other environmental low temperature, high temperature and humidity tests were conducted on these equipments using the Magnematic ignition system. In the course of testing out low temperatures, ranges of temperature minus 25, minus 30, minus 40, degrees F., we found decided improvement in the starting characteristics of the engine using the new ignition system. Starting was much easier. We found that the coming-in speed during cranking was on a lower order in rpm than the coming-in speed necessary for the older ignition system, which was about 200 to 225 rpm. For that reason, where cranking was difficult at low temperatures and where you could crank an engine at lower speed and

Page of Transcript

have it coming in and firing properly, that was a decided
59 advantage.

I was particularly interested in trying to make a comparison of field usage and unsatisfactory equipment reports primarily of ignition systems, and I made an investigation recently of the extent of unsatisfactory equipment reports on the new engines where a considerable number of them had been used in Korea during the Korean war period of 1952 to '54, and I was not able to find one report relating to ignition system failure. I found no unsatisfactory reports on the starting difficulties of those engines. Engines incorporating the Briggs & Stratton Magnematic ignition system have been used world-wide. We have been all over the world, in Europe, in the Pacific theater, Japan, Korea, in the Arctic, and in tropical areas like the Bahamas and South America. They are used all over.

The drawings of the patent to Madle, No. 2,605,753,
60 positively do relate to the Magnematic ignition system about which I have been testifying. I would like to state that insofar as a single cylinder four-stroke or two-stroke cycle engines, there were none that had any ignition system comparable to the one that was made known to us in 1949. None of them had those advantages about which I have testified. That answer relates to the patent I have in my hand, No. 2,605,753, and particularly to the drawings thereon.

If such an ignition system had been in existence prior to our learning of the Briggs & Stratton Magnematic
61 ignition system we would definitely have been aware of it, either directly through our own activities in the Signal Corps where we were making personal contact with

Page of Transcript

manufacturers, also in keeping abreast of the activities carried on by the other services in this related field.

We also made high temperature tests on the engine having the Briggs & Stratton Magnematic ignition system. Part of our specification requirements had called for an engine to be capable of starting in an ambient temperature of plus 125 degrees F. and continuing to operate in such an ambient temperature for a minimum period of two hours without undue temperature rise of any of the engine parts which could result in premature failure of the engine. We made such tests repeatedly on various prime contractor's contracts to supply the engine generator set known as PE-75 generating set, which comprised a Briggs & Stratton six horsepower engine and a 2.5 Claywood single phase 60 cycle AC generator furnished by several electrical manufacturers. That six
62 horsepower engine, being Model 23-BP, uses the Briggs & Stratton Magnematic ignition system. The high temperature test at all times indicated that the engine could perform satisfactorily. Further tests, humidity tests were also conducted to determine if the system when subjected to humid conditions experienced in the field would be subject to corrosion and degradation resulting in failure, and it was determined that the improved features of the system using a molded coil as against a previously impregnated type coil, was superior in resisting corrosive attack of moisture absorption.

63 *Cross Examination*

Naming the elements of the Magnematic ignition system, the first element is the conventional flywheel magneto located on the crankshaft in a similar manner to previously used flywheel magnetos. The next element

Page of Transcript

is a pinion gear on the crankshaft which engages with a camshaft gear to drive a camshaft at one-half of the engine speed. On the camshaft is a cam which actuates a cam follower, and part of the cam follower is connected to the cam follower as a rigid body—rigid in relation to the cam follower itself is a motion-transmitting shaft which extends beyond the side wall of the crankcase and actuates the moveable breaker contact point of the breaker contact—the breaker contact assembly located on the exterior side wall of the engine. In addition to the breaker contact is a condenser in the primary winding system and a fixed breaker contact point that is part of the ignition system. There is also on the camshaft gear a means of advancing the cam through centrifugal action resulting from increased speed of engine rotation, which advances in the same relation the spark in the engine at the spark plug. The coil is part of the magneto assembly and is in this particular case a molded coil, and part of the coil feature is that the high tension lead is molded into the coil in a fashion to provide a very effective seal, minimizing and practically eliminating moisture entrance to the coil at the point of the high tension lead.

The Alnico magnets are located on the flywheel magneto rotor and are part of the basic electrical generating system of this flywheel magneto. These magnets, in conjunction with the winding of the coil form a basis of providing the electrical energy which is imparted to the spark plug to provide the necessary spark within the
65 combustion chamber.

Q. Were there ignition systems that you examined or had experience with previous using Alnico magnets?

A. Yes sir, there were—there were several ignition systems using an integrated type of magnet system mag-

Page of Transcript

netos. They were also used on a single cylinder flywheel type magneto. As far as the state of the art of Alnico magnets I could tell you this: That the Signal Corps was one of the prime movers in the development of permanent magnet generators, not only for ignition systems but for large power sources. And we were quite aware of the state of the art in permanent magnet use.

The location of the magneto on the crankshaft, the basic elements thereof, with the exception of the improved molded coil, could not be considered as possibly
66 new or novel. I knew of the magneto flywheel as such as going back during the early war period, 1941 and 1942, we were using such flywheel type magnetos. The crankshaft that drives the camshaft here was known prior to 1940, but we didn't find it as an application for ignition systems. It was used for other purposes, for such things as a pump—a fuel pump or something, lubrication pump or other type of application, but it had not been dis-
67 closed to us for using this camshaft gear for ignition systems in a single cylinder engine. I restrict it to single cylinder engines because in the multiple-cylinder engines at most you may have a camshaft gear—a camshaft primarily designed as a power take-off device to be used for valving, for magneto ignition, and several other possible operations, a fuel pump, and other accessories. The reason why I confine it to single cylinder, we were not able to find such an application or useability for a single cylinder engine during the war. Usually in the multicylinder engine, by virtue of the increased size of the engine, you could use a complete magneto—an integrated magneto rigidly mounted to the engine in a fashion to—and by a distributor means provide the necessary function for multiple cylinders, but in a single cylinder en-

gine where you are fighting for space and size limitation and weight such an integrated magneto does not lend itself too well, if you are fighting for weight, size and
68 compactness. And that for military use is one of our big problems, keeping the weight and size of the overall equipment down as much as possible, and particularly if you are talking about small lightweight equipment of the order of one and two horsepower, definitely you could not tolerate anything other than a flywheel type of magneto which usually didn't necessitate additional space, could be made compact and lighter in weight than the integrated type of magneto used on the multiple cylinder engines.

69 The coil assembly as a molded coil had been used during the war. The idea of the art had not been previous to have enabled the use of a molded coil with the high tension lead so emanating from the coil to provide a very effective seal to prevent moisture entrance to the coil itself.

When I say molding a coil I mean casting it in thermoplastic resin. With new technics and the new scientific materials you are able to take the electrical coil and mold around the coil with the dielectric scientific materials to give you an effective seal. One of the biggest
70 problems in the war was that not only in electrical equipment used in engines but in all of our radio electric equipment effecting a complete seal to eliminate the entrance of moisture in such devices as resistors, vacuum tubes, transmitters. That was one of our biggest problems; and many concerns were in research development programs for effecting a means of sealing these components to eliminate moisture penetration, which could result in the breakdown and failure of the equipment.

Page of Transcript

By our own tests in the field and in the laboratories by the use of more than 30,000 of these units—of these in one type of unit with no unsatisfactory reports that I could determine relating to ignition failure, was definite proof that the molded coil was far superior to the previous impregnated type of coil.

The Court: May I address a question to counsel for the plaintiff? Does that appear in any of your claims?

Mr. Custin: Now if the court please, that coil situation is a little red herring that has started to enter through
71 this whole thing. I think I can bring it out that the coil has nothing to do with any of the other advantages to which this witness testified or any of the results derived had from this Madle invention.

The Witness: You don't find the molded material in the Madle patent. This molded coil is one of the components of several that were—you could say contributes to the improved performance that we obtained from engine operation.

I made a search through the patents in the Patent Office. I myself and the man I sent down subsequently to Washington in 1948 searched from 1948 as far back as possibly 1900 to try and see if there were any features
72 in any patents relating to ignition which could be used to give us an improved and more reliable type of ignition system. The patent would give us an indication as to novelty or features that would be possibly employed to give you an improved ignition system. As an example, the location of the breaker points outside of the flywheel magneto would be—if it had been disclosed to us in a single cylinder we would have considered it some-

thing to look into for further development and use for our need. Now, as a matter of fact you can't tell a thing about whether a device is worthwhile or going to fit the job until you have tested it. It is part of our work, with all of our engines, to test them very carefully for *many many* hours.

73 Not only single cylinder ignition systems use breaker points. The breaker points on the Model T were located outside of the magneto. They were located near the fire wall of the engine. I had occasion to examine them as far back as I can remember. I never owned a Ford but I knew people that did. Every boy that has used a Ford or owned one has worked with the breaker points. They were *very very* accessible.

74 Every advantage that flows from mounting the breaker points in a single cylinder engine outside of the confines of that engine also follows in the multiple-cylinder engine. Insofar as it related to the application to a single cylinder engine he did solve a problem, because prior to that time in our use, in our need, we didn't have the type of accessibility in a single cylinder engine that we enjoyed in a multiple-cylinder engine. We did look into multiple cylinder engines to get ideas for use in single
75 cylinder engines ourselves. We didn't have time as I mentioned, in the war years, we were restricted in the amount of activity we could place on development work ourselves because of the arrangement of using commercial items and attempting to use them as military equipment. Sure, we spent time on it but the way of placing breaker points on the outside and still maintaining the features or retaining the features of the flywheel magneto were not too obvious to us. They were not obvious enough to come up with the idea.

Page of Transcript

We were not manufacturing engines, but we were interested in engine development, as I stated before we made—the Signal Corps, my particular Branch, made some notable contributions to the permanent magnet ignition, we were studying all forms of ignition systems because we knew some of the problems we were encountering, and we were attempting to try and find an improved method. As I stated, we were vitally interested in what industry was doing and we even placed contracts with several manufacturers for simple light weight engines development particularly as relating to improved ignition and carburetion systems.

76 Prior to the Magnematic the breaker points about which we are talking, or the timer, were located within the flywheel magneto housing which was of course located within the crankcase of the engine.

Q. You mean, the magneto on the flywheel was within the crankcase?

A. It was on the crankshaft.

Q. Within the crankcase?

A. Within the crank — the flywheel magneto was on the crankshaft, and the breaker point assembly was on a plate affixed within the engine adjacent to the magneto itself and actuated by a cam action from the crankshaft directly.

Q. Do I understand the breaker points were located actually within the crankcase?

A. Within the crankcase, yes.

Q. That is where the oil for lubrication would splash all over them?

A. No, not in that portion of the crankcase where you normally would require lubrication, no.

Page of Transcript

Q. Weren't they located on a plate outside of the crankcase, isn't that a more correct description?

A. Possibly outside of the crankcase but still within
77 the interior of your engine housing, outside of the cylinder and crankcase housing.

So the oil from the splash lubricating system in the crankcase never reached the breaker points, unless at times where you had seal problems and you have defective seals. Normally you wouldn't have too much seal problem. The
78 breaker points were confined within the shroud that covers the cylinder and crankcase. Madle locates them on the outer face of the crankcase. The breaker points perform the same function whether mounted on the outside of the wall of the shroud or within the shroud, or outside the crankcase and cylinder. The sparkplug and the ignition system doesn't care where the breaker points are located. The whole thing was derived from mounting the breaker points on the outside of the shroud is when they have corroded, or become defective — or need adjustment, you can reach them easier. They are more accessible. That same benefit
79 flowed with respect to this Model T Ford.

In cranking the Model T Ford there was a spark advance control lever on the steering column right under the steering wheel. When we went out to crank it so we wouldn't get our arm broken by a kickback it was put into a — as I remember — or pulled downward action. That is retarding the spark. So the spark occurs near dead center. That means, that you want the combustible mixture compressed in the cylinder to be ignited when the piston is at the top of its compression stroke and the crankshaft is on about dead center. After you got the
80 engine started you would have to advance the spark advance lever to give you earlier firing to give you suit-

Page of Transcript

able engine operation. Madle achieves the same objects through an automatic means, right. In other words, he does by centrifugal advance what was done in the Model T Ford by manual advance. A centrifugal spark advance was plenty old prior to 1940. Now, when it comes to getting an engine to fire, to start an engine in cold weather, ignition isn't the only problem or condition which is met, but it is one of the major problems, the ignition. Fuel induction, the type of fuel used, the type of lubrication used; there are quite a few related problems to starting. We have tried to start a single cylinder engine with some gasoline that stood over winter in a
81 gas can. It is an impossible job. Because normally the vapor pressure of the fuel is so low that you cannot derive the necessary volatility of the fuel effect combustion, and therefore it wasn't a winter grade fuel. For fuel used for low temperature operation you must have a high grade vapor pressure fuel to effect compression. The lubrication is also important. No material improvements were made in these Briggs & Stratton engines we tested with Magnetic ignition systems on them in the carburetion or carburetor of the engine over the ones previously used. The condition of the oil or the type of oil you have in an engine affects the starting. If you have an oil of high viscosity which adds to the frictional problems of starting it will make it most difficult to turn
82 over an engine crankshaft at reasonable speeds to accomplish starting, and therefor you use oils of low viscosity for low temperature operation. And as a matter of fact in our early war years where we had difficulty— where we were investigating problems of cold starting, we used to dilute our oil with gasoline, giving us a crankcase dilution, thinning out the oil to enable us to

Page of Transcript

effect starting. One of the biggest dangers of this crankcase dilution was that the lubricating properties of the oil were seriously diminished and we had quite a few engine failures due to neglect and the improper training on the part of our GI personnel to effect more oil changes than they normally would under normal temperature operation. So oil and its weight or its viscosity is an important factor in ultimate operation on starting. Now, the speed at which you crank an engine is also important. It is important to the point of—there are several reasons for it. One is, to effect a minimum speed in which the ignition system becomes sufficiently effective to produce the spark, and also the other important factor is to permit the proper fuel induction into the combustion chamber
83 which, together with the proper spark, will give you combustion.

As far as starting is concerned the engine will start just as well or just as poorly whether you locate the breaker points on the shroud outside the engine, or within the shroud outside of the crankcase. It is also true that your breaker points or your timer will operate just as dependably whether it is located outside of the wall of the shroud or inside of the shroud but outside of the crankcase.

The major difference between the Magnematic ignition system and one of the prior art is that of accessibilitiy in the arrangement, achieved by using a flywheel magneto and its relation to ignition system parts to give you greater accessibility of your breaker contact points which were
84 subject to higher maintenance and adjustment, and a means of incorporating a spark retarding and advancing feature to facilitate low temperature starting or starting

Page of Transcript

at low cranking speeds. Another point was that by the use of the camshaft operating at one-half engine speed, you reduce the number of sparks to only the one effective spark required during the power stroke of the engine, where there were required two sparks on each revolution of the crankshaft. The mounting of the breaker points on the outside of the shroud, had a relation to this driving of the cam on the camshaft so that you get a spark every other revolution of the crankshaft in this respect: That the cam follower actuated from the cam on the camshaft which opens or closes the moveable breaker contact, they have a definite mechanical design relation one to the other. In this respect the circuit breaker opens the primary circuit in which the current is flowing, causes induction into the high tension winding, or the secondary circuit, at a proper time, which then transmits its electrical voltage energy to the spark plug and you accomplish a spark. Now, that function of the spark-plug is performed whether the circuit breaker is located on the shroud — outside of the shroud or within the shroud and outside of the crankcase of the engine. That function as to the circuit breaker is also performed whether the cam is driven directly off of the crankshaft, or directly off of the camshaft, with one exception: That using the camshaft you are breaking your contact once every two revolutions instead of once every revolution of your crankshaft. Your breaker point does know—or the circuit breaker does know whether it is being opened every revolution of the crankshaft or every other revolution of the crankshaft, to this extent, over the period of the operation of your engine you are getting one half of the number of breaker point actuations; your breaker points do know as far as life and wear. That is also true

on every automobile engine that I have ever known.
86 Every automobile engine, the sparkplug fires only once on each cycle of the four cycle engine.

In the Magnematic system, there is a condenser. It functions as one—at the time that your breaker contacts are open, the electrical energy that is in the system—when you disturb any electrical spark by opening a contact or a switch you will get an arcing condition. In order to minimize the effect of this arcing condition on these points, in order to give you increased life and wear of the points you have to use a device that will absorb that electrical energy at a fast rate and discharge it at a slow rate to ground, and thereby take the brunt of the shock away from the contact at the breaker points. If you don't have such a device in short you will not have life in your contacts points, and in some magneto designs you cannot even effect the proper high tension spark.
87 The condenser is a very important part of the ignition system. Without it you would have a real engine starting problem.

The ignition problem is the same, to a degree, in a single cylinder, single piston engine of low horsepower as it is of a single cylinder engine of a higher horsepower, with the exception in the smaller engine, comparing a one horsepower engine to a five or six horsepower engine, you have a smaller and light weight parts which by virtue of their smallness they have less friction to overcome and possibly you can crank at a more effective speed the smaller engine than you can the larger unit. Physically — the physical requirements would be greater to crank the larger engine. To my knowledge this Magnematic ignition system is used on a nine cubic, a fourteen cubic inch and a twenty-three cubic inch displacement engine of the Briggs & Stratton Corporation.

Page of Transcript

88 The 23 cubic inch is approximately six horsepower at our speed of operation about 2400 to 2800 rpm. The 14 is somewhere within the range of three to four horsepower, depending upon the operative speed. And the nine would be down in the order of one and three-quarters to two horsepower, depending upon the speed of operation.

89 With respect to the starting of engines in sub-zero temperatures, it is also common practice to heat the crankcase oil.

The normal operating speed voltage of the Magnematic system is not commonly different from that voltage found in other magneto coils, but in this particular design at the lower cranking speeds you do have and you do enjoy a hotter spark or higher voltage than usually found in other magneto systems. I am referring to the magneto as shown here—Exhibit 25. And I do believe
90 that that design was not usually embodied in earlier magnetos to give you the hotter spark at low crank speed because you did not have the advantage of a spark retarding effect and as a result without the spark retarding you have greater severity of kickback if you did use a hotter spark. So I do feel an advantage or result from the use of an automatic spark retarding permitting the use of a hotter spark at low cranking speed to aid you in getting easier starting. That function of a centrifugal spark advance is in other ignition systems, but not having a hotter spark, not necessarily so. You find that is embodied in a design that had not been used too many years or had not been used many years ago. It had been used possibly in an integrated magneto and in connection with possibly an impulse type feature in magnetos. That is one of the reasons they have always used the centrifugal controlled spark advance.

In the patent searches of the literature, we found
91 literature showing the breaker mechanism that was operated off of the cam gear for the multi-cylinder engine application, yes. We didn't find anything for a magneto used for a single cylinder application. Not that I remember, I don't think we did.

If the breaker in the magnematic ignition system were actuated by the cams operating at crankshaft speed, then of course on one complete rotation of your camshaft you would cause the cam to cause the breaker points to open once each revolution of the crankshaft. I consider the camshaft actuated circuit breaker contributes to the design and overall improvement. Contributes to the life of the system.

92 I made an inquiry to see if any of the unsatisfactory equipment reports that were submitted, whether there were some pertaining to failures of the Magnematic ignition system used on the PE 75 power units that were in use in Korea, and as a comparison I wanted to see as against failures resulting in World War II equipment, whether there were such failures. And I was not able to find—my maintenance division did not have one report relating to ignition failure. That does not necessarily mean there were no ignition failures. It means this, that the problem was a minimum problem, it wasn't a major repetitive type of failure where the officer in charge would consider it necessary to file an unsatisfactory equipment report. If it was a usage condition he normally would not file an equipment report.

93 ***Redirect Examination***

An integrated magneto is a completely self-contained magneto assembly containing the electric generating

Page of Transcript

parts, either a rotatable magnetic rotor and stationary winding or windings, in which is induced electricity, a set of breaker points, and a condenser, all-self-contained, where a shaft extends from the magneto body housing to engage either a direct or accessory drive from the engine itself. So that the magneto is operating at a predetermined and prescribed time and speed in relation to the engine itself.

94 The advantages, of those advantages to which I testified, that were attributable to that molded coil were the advantage of being more impervious to moisture absorption and corrosion as compared to the previous type of coil. But other than the coil it promoted easier starting at low temperature and longer operating life. No other advantages were derived except that the coil itself would be less subject to wear and tear and ineffectiveness. In other words, none of these other advantages flowed out of the coil.

The one important feature of locating the points externally or in an accessible manner gives you a means of examining those points or breaker contacts more
95 readily, more frequently, than you otherwise would. You are able to clean them, dress them up more frequently than you otherwise would, and adjust for proper gap. And these features were attributed to a longer operating life of the points and the entire ignition system, and the fact you could maintain them more readily. In the tests that we made on starting, talking about the engine with the Briggs & Stratton magnematic ignition system, we knew that those test results were not the result of some new or different oil or gas or condenser, or some of these other factors, because we had multiple control tests, and by these control tests we mean that certain elements

were maintained as constants. In other words, the fuel used, the type of oil used, conditions under which the equipment was subject to low temperatures. All of these factors were constants and we were only trying to determine what advantages were made as a result of the difference in ignition systems. Our tests were conducted with this control idea always uppermost in our mind.
96 That would be the only way we could determine whether a device, in being a new feature, had any grounds for improvement. If we hadn't maintained controlled tests the tests you made would be meaningless.

I wouldn't say from its physical aspects being molded made any difference in the design of that coil. Its electrical characteristics were slightly different to give you a higher induced voltage at lower cranking speeds than otherwise obtained in the previously used coils. Previously used coils were not designed to give you that magnitude of voltage at low cranking speeds. I would say it would not have been possible to have used a coil designed for low coming-in speed, having the voltage characteristics of the molded coil. As I mentioned previously you would be inviting a hazard and danger because without the feature of a retarded spark and a higher
97 voltage at low cranking speed you would get a greater magnitude of kickback in an engine.

Although we knew that all of the individual features and advantages of the Briggs & Stratton Magnematic ignition system were present in multi-cylinder engines—we did you not adapt that knowledge to our ignition and starting problems on single cylinder engines, because although we were aware of these features individually it was not obvious to us to put them together and use

Page of Transcript

them in relation to a flywheel magneto in a single cylinder engine.

Using the magnematic ignition system on the Briggs & Stratton engine in our cold tests, to temperatures of minus 25 to 30 we did not take any means of heating the crankcase oil, and we had specific reasons for not — for trying to see what type of starting could be effected.
98 In order to heat the oil in the field you would have to provide a means of using a separate type of heater or some sort of fresh air heater driven by other electrical devices, which in themselves were not available. So it was a problem to see to what extent using the proper fuel and lubricants, to what range of low temperature we could subject a unit, and accomplish successful starting without regards to heating or other starting aids. And we were able to positively start the BP Briggs engine with the Magnematic system, and more readily at temperatures of minus 25 degrees F. than we were able to do in the previous ZZ Briggs & Stratton engine which did not have the Magnematic system.

Re-cross Examination

Q. Mr. Shore, in this exhibit 25—plaintiff's Exhibit 25 there is a voltage curve of the Magnematic magneto on page 3. Will you tell me whether or not that voltage curve is a new curve?

A. Now, in what sense?

Q. Were you familiar with that type of voltage curve on internal combustion engine ignition systems prior to the Magnematic?

A. Oh yes, yes sir.

Page of Transcript

99 Q. In other words, other ignition systems in the prior art, prior to the Magnematic, it was old to have that same type of voltage curve?

A. Yes sir.

Q. Well, that was at cranking speeds, and then after the voltage dropped down you would pick up the operating speed of the engine, that was old?

A. Not necessarily in all cases.

Q. Well, was there in any case?

A. There were in some cases.

Q. Just one or two, just as long as it was old.

A. Uh-huh.

Q. It was then?

A. Uh-huh.

100 So far as I know this magnematic system is not used on lawnmowers, that is, for the average lawnmower user. It is quite possible that it is not needed for that type of an application because they are not cutting grass in the winter time, and you are not subjecting the engine to the type of environmental rigors that would be employed in a military engine.

* * *

102 *Mr. Balluff:* As Your Honor has said, in the original hearing the question of infringement was not particularly argued.

The Court: I would say that was an understatement.

Page of Transcript

DEPOSITION OF HAROLD E. BRUNS

116 *Direct Examination*

Harold E. Bruns; 2311 Wisconsin Avenue, New Holstein, Wisconsin, age 51. I am Works Manager of the Lauson Engine Division of Tecumseh Products Company. I have been employed by the Lauson Engine Division under Tecumseh ownership, since January 3rd of 1956; and prior to that I was associated with the Lauson Engine plant here since April 15, 1935. At the time I came here in April, 1935, the plant here was in receivership, and I came here under the auspices of the Marshall-Ilsley Bank of Milwaukee as accountant. I prepared some financial statements prior to the public sale, which was then called a receiver's sale. This sale
117 was held on May 18, 1935, at which time the assets of the receivership were sold to the Marshall & Ilsley Bank, and the People's State Bank of New Holstein, Wisconsin. Then I stayed on here as treasurer of the new corporation, which was then formed after this sale and was known as the Lauson Company. That was a Wisconsin corporation. I remained as treasurer until about 1940 when I became secretary and treasurer. And in June, 1941, the Hart-Carter Company of Peoria, Illinois, purchased this facility and operated as a division. I remained as secretary and treasurer for them from June '41 until about January 1, '47, when I became President of this division. And it was then known as Hart-Carter Company, the Lauson Division. I was also an officer of the Hart-Carter Company, namely, assistant secretary—assistant treasurer. I remained as President until Tecumseh purchased this operation January 3, 1956. Actually my presidency expired at the close of business, December 31st, and Tecumseh officially took over January 3rd be-

Page of Transcript

cause of the holidays. At present I am Works Manager of this division.

119 During my years with Lauson, since I was either in the top position here, or close to the top most of the time, I was very closely associated with engineering. I read blueprints. Up until about four years ago A. S. Bosma was head of engineering at Lauson. Alfred S. Bosma. Glennroy Aggen was chief draftsman. The general nature of the products that Lauson has made down through the years has been gasoline engines.

120 Defendant's Exhibit No. 70 is Manual Instructions and Part List for the Lauson Sport King outboard motor. It was published 1946, in November. I know that we published manuals of this kind at that time, and also the printing date is on the form back here. It relates to the Lauson Sport King outboard motor which was manufactured in this plant between 1940, approximately, and 1947.

121 To the best of my recollection the number of Lauson Sport King engines that were made and sold between 1940 and 1947 would be in the neighborhood of from 20,000 upward. Exhibit 70 is not the first or only catalog that was ever published on this Sport King outboard motor. As I recall, there were quite a number of them. The Sport King outboard was designed by A. S. Bosma, as chief engineer, and Glennroy Aggen as his assistant. I was here at the time it was designed. It was a four-cycle, air cooled, single cylinder internal combustion engine. It had a bore of two and one-eighth, and a stroke of one and three-quarter, approximately two and one-half horse power. This catalog, Exhibit 70, gives you the

Page of Transcript

details of the engine. It properly describes, or sets forth, the specifications of the engine.

122 The cylinder and crank case of the Sport King were made in a single casting. They were made in the same casting, and in that construction, that type of construction, the major parts of the engine were all included in this major casting, let's say. The material from which the casting was made was grey iron. The OB-1 casting,
123 upper left-hand corner of page 6 of Defendant's Exhibit 70, comprised entirely the cylinder bore, the cooling fins with it, the valve cage, the crank case, the valve guides, the bearing openings for the crank shaft and the cam shaft, and the enclosure for basically all the working parts of that engine. All of the walls of the crank case were a part of this casting OB-1 except for one opening. There was an opening, as is shown here. A large opening which was closed by the oil sump. I would designate that wall that was open as the power take-off wall of the engine. This wall that I just alluded to, the wall which houses the power take-off end of the crank shaft, was closed by a little intermediate plate, or baffle, and an oil sump casting. That baffle is shown here on page 6 of Exhibit 70 as part OB-2064. The oil sump is not shown on page 6, but it is shown on page 8, and it is there des-
124 ignated as OB-1015. The crank shaft was mounted on the magneto end through this bearing aperture in the cylinder and on the other end through this intermediate baffle plate, OB-2064, and it extended on through the bearing boss in OB-1015.

Referring to this baffle plate OB-2064, there is an opening in about the one o'clock position. That is on page 6 of this catalog. This opening is the opening for the cam shaft which is mounted in this end and again

Page of Transcript

on the magneto end of the cylinder. And that opening on the cylinder OB-1 is about in the one o'clock position. Now, in this plate OB-2064, there are two openings, one above and one below the center at about the twelve o'clock and the six o'clock position. Those were oil return holes. This engine was designed to be used in an out-
125 board motor, and as such, and knowing that an outboard motor is transported in many different positions, and since it was a four-cycle engine in which it is necessary to add the oil in the oil sump, we had to provide some means of keeping this oil from the oil sump from getting up into the cylinder of the engine when the outboard was being transported in a horizontal position. So this baffle served that purpose. That problem with respect to baffling the oil is absent in a two-cycle engine since the oil is not retained in the crank case but is mixed with the fuel.

This Sport King engine that is shown in the catalog, Exhibit 70, was used for an outboard motor initially, and was also used as power for power mowers. Defendant's Exhibit No. 71 is a manual of instructions and repair parts list covering the Lauson Power Head. This printing was August, 1949, but we were building this engine in 1941, and there must have been printings at that time of this type also. I know of my own knowl-
126 ge that there were previous printings of this catalog such as identical with Exhibit 71.

The Lauson Power Head was the basic engine part of the Lauson Sport King outboard. It included this crank case and cylinder OB-1 shown on page 6 of defendant's Exhibit 70. It included all the parts listed on page 6; also on page 8, with the exception of a couple of items peculiar to outboards. I am referring now to

Page of Transcript

this catalog of the Sport King outboard motor, defendant's Exhibit 70. The parts shown on page 8 that were not included in the Power Head were the steering handle grip, the steering handle. That is OB-416 and 447. And the oil sump, OB-1015. Instead of using OB-1015 in the
127 Power Head, we used another casting which took its place, which can best be identified by referring to page 10 of the Power Head manual, and refer to Item 70. That was an oil sump base which was used on the Power Head to make the Power Head adaptable to the rotary-type lawn mower, and it incorporated in it a mounting means so that the engine with this base on it could be directly mounted on a rotary-type lawn mower. Plate 70 was actually the adapter plate also for securing the engine to the lawn mower. Plate 70 was for the purpose of providing a means of carrying the lubricating oil for the engine, and also for mounting on rotary-type power mowers. The Power Head engine was built and sold by Lauson between the period of 1941 and '47. There were
128 several thousand. On page 9 of the catalog, defendant's Exhibit 71, there is shown a Plate 55. That is the same plate that is shown on page 6, defendant's Exhibit 70, OB-2064. On page 7 of the Power Head manual, Defendant's Exhibit No. 71, there is shown a part, designated 1, and its service number is 23037, and described as a cylinder. In the catalog, defendant's Exhibit 70, on the Sport King, page 6, that would be the same as OB-1.

* * *

132 Exhibit No. D-78 is a Lauson Sport King outboard motor. That engine is made in accordance, or the same engine as shown in these drawings, Exhibits D-72 through D-77, inclusive, and the two catalogs, Exhibits D-70 and
133 D-71. This particular engine, Exhibit D-78, was built

in '47. This serial number is 7-ob-9179, I believe. The first number being "7" indicated a year at that time. The established practice at Lauson with respect to numbering these Sport King engines was that the engine was built and upon completion it was then serial numbered in our shipping department where they kept a record of running serial numbers. And that practice was always followed.

134 In converting the Sport King outboard motor of Exhibit D-70, to the Power Head which is shown in defendant's Exhibit D-71, the basic important change was the elimination of the outboard motor oil sump casting and the substitution of another casting. When we eliminated the outboard motor casting, which is part No. OB-1015, we eliminated the rest of these parts, such as the
135 propeller. Whatever extends below that plate OB-1015, plus the steering handle. Defendant's Exhibit D-79 is the oil sump casting. When applied to the Lauson outboard motor it made that engine adaptable to such applications as rotary power mowers. In this catalog, defendant's Exhibit No. D-71, that is Item No. 70, on page 10. In converting the Sport King engine, which is Exhibit D-78, to the Power Head, we removed everything from the outboard engine base, or so-called oil sump, down, and substituted this Power Head base, namely, Item 70 on page 10. Then we also removed the
136 steering "L[redacted]n other words, it was not applicable to this base. Now, referring to the second sheet of Exhibit D-70, we removed from the Sport King all of the parts shown below this plate OB-1015, and substituted for that plate this sump, Exhibit No. D-79, which is the part No. 70 on page 10 of Exhibit No. D-71. I personally observed that being done. Now, referring to Exhibit
137 D-70, page 6, the part No. OB-1 was a cast iron element.

Page of Transcript

And this shows the cylinder and crank case, but the crank case has an open wall. The parts used to close that open wall, referring to Exhibit D-70, were this intermediate baffle plate, identified as Part OB-2064, on page 6; and on page 8, OB-1015, known as the outboard motor oil sump casting. And, then, in addition to
138 the Part OB-2064, for closing this open wall of the crank case OB-1 we used Item 70, page 10 of Exhibit D-71. When we converted the Sport King engine, Exhibit D-78, to the Power Head shown in Exhibit D-71, in some cases we might have added a screen to the starter pulley. You can see the other part of the motor. To eliminate grass from getting into the engine, and we might on occasions have added a die trip air cleaner to the carburetor. The basic crank shaft forging in the Power Head was the same that we used in the Sport King, but it was machined different for the power take-off end. In the Power Head, which is shown in the catalog Exhibit No. D-71, there were no differences whatsoever in the cylinder and crank case which is OB-1, on page 6 of Exhibit D-70. The cylinder gear — combination cylinder and crank case casting remained the same for both types. By "same" I mean identical. And this plate OB-
139 2064, was the same identical plate in both the Power Head and the Sport King outboard. We substituted, though, a different oil sump, namely, Exhibit D-79, instead of this part OB-1015, page 8 of Exhibit D-70.

Gwynedd Corporation was one of the companies that used the Power Head which is shown in defendant's Exhibit D-71. They were at that time at Landsdale, Pennsylvania. That same company was also known as Rotomower.

• • •

Page of Transcript

142 Between 1941 and 1947 the Gwynmower and the Rotomower used the Power Head as a source of power for its rotary mowers.

143 STIPULATION: During the period from 1940 to 1947 the Lauson Company manufactured and sold several thousand Sport King outboard engines, such as shown in defendant's Exhibit No. D-70, and present here as defendant's Exhibit No. D-78, and several thousand Power Head engines for use on Lauson mowers such as shown in the manual of instructions, defendant's Exhibit No. D-71.

The piston in the Sport King engine was made of aluminum. Prior to 1950 we had experience with using aluminum as a bearing material. We used it on con-
144 necting rods in the form of aluminum connecting rods running directly on steel crank shafts. We found aluminum to be very successful as a bearing material.

146 *Cross Examination*

Between 1940 and 1947, Lauson was making other engines for, or adaptable for, lawn mowers. As an example two horespower iron and called Model RFE was being made. After 1947 Lauson made several en-
147 gines designed for use on or adaptable for use on rotary power lawn mowers. Lauson made an engine which followed the drawings of Patent No. 2630881, which is made of record in the prosecution of the Lechtenberg patent, in suit in this action. It was known as our Model RSV-750. It was made as early as 1949. In the way of rotary lawn mower engines,
148 between 1947 and 1950, we made the Model RSV-750, which I mentioned before, and we made a Model RSH-

Page of Transcript

775. We started making the RSH-775 about 1940, and
149 the RSV-750 about 1949. During 1947 to 1951 or '2 we also made conventional horizontal shaft engines which were used on lawn mowers. The manufacture of the Sport King outboard engine, one of which is in evidence here as Exhibit D-78, was discontinued in 1947. Lauson continued to make and sell outboard engines after 1947. We brought out two new models. Referring to the patent to A. S. Bosma, No. 2607332, which is of record in the file wrapper of the Lechtenberg patent here in suit, Lauson made an outboard engine like that shown in the Bosma patent during the period subsequent to 1947. We are still building the engine, Model R, embodying disclosures of Patent 2705056 and Patent No. 2705002, to Bruns and Bosma respectively. As I recall, it was '52 that we began making them.

150 Lauson has a number of patents. We maintain a constant program of patent activity.

Manufacture of this Sport King engine, of the type shown as Exhibit 9, was discontinued by Lauson because the trade was becoming interested in more streamlining. They wanted more horsepower. In other words, they wanted something new.

151 The purpose of the baffle plate, which is identified in the outboard engine manual, Exhibit 1, as OB-2064, when that baffle plate, or one like it, was used on the Power Head engine, it did not — it wasn't intended in that case to baffle the oil necessarily. It carried its other function of carrying the bearings for the crank shaft and cam shaft. In other words, it did have an important function of supporting the crank shaft and cam shaft on both of those engines. In assembling either the Power

Head engine or the Sport King outboard engine, it was necessary to fasten that baffle plate, corresponding to this OB-2064, — to fasten that on before the sump was
152 put in place. To make a complete engine. I should add there that the sump also helped hold the piece. It was not completely fastened without the sump. It was partially fastened, and then the sump completed the fastening. You could not have fastened it to the sump and then installed it, not in that setup.

There was no horizontal shaft counterpart of the Power Head engine. That particular cylinder crank case casting which is used on the Power Head and on the outboard Sport King was never used as a horizontal shaft engine without revisions. With only a change in the cover which forms this combined sump and flange mounting, it could not have been used as a horizontal shaft engine without other changes in it. The Power Head
153 engine was never die cast; that is, the cylinder crank case portion of it. It could have been made as a die casting in the form in which Lauson built it. Exactly that way.

Lauson now makes a die cast engine. Model SLV is one, Model VA. Lauson started production of this
154 light weight die cast engine, either the SLV or the VA, in early 1954, to the best of my recollection. That engine
155 was announced early in 1954. To the best of my recollection, approximately April, 1954. These VA and SLV engines are good sellers. There is a big demand for them. We are not quite able to meet the demand for them.

157 *Redirect Examination*

In making the Sport King engine, Defendant's Exhibit D-78, that would operate with the crank shaft horizontal,

Page of Transcript

you would not have to change the casting which part No. 23037 represents, No. 1 on page 7 of the Power Head pamphlet, Defendant's Exhibit D-71, and also referred to as OB-1 on page 6 of Defendant's Exhibit D-70. I
158 know for a fact that you could use the single casting of the cylinder and the crank case, OB-1, that is, that you could cast the cylinder and crank case as a single casting and use it in a horizontal engine in which the crank shaft operated in a horizontal plane. We make many thousands of horizontal shaft engines.

The cylinder and crank case in this part No. 1 of Exhibit 28 are one die casting, or they have incorporated within that casting a cast cylinder. There is one wall of the crank case that is open. That is the power
159 take-off side of the engine. I find a comparison between the part No. 1 of Plaintiff's Exhibit 26 on page 11, and OB-1 on page 6 of Defendant's Exhibit No. D-70. In fact, the light weight engine was designed from this original Sport King engine. I participated in the design of this light weight engine in my usual manner of suggestions and so forth. The part No. 1, reference No. 1 on page 12 and shown on page 11 of Plaintiff's Exhibit 27, the Model SLV, and the part reference No. 1 on page 11 of the Plaintiff's Exhibit 26 of the Model VA engine are basically similar. So what I said with respect to part No. 1 of the Model SLV engine, Plaintiff's Exhibit 27, holds equally with that part in the Model VA engine.

When the trade began to demand light weight, we
160 examined all of our line of engines to see what we had. This appeared to be the best for a pattern for a new light weight engine. By "this" I mean this Sport King outboard engine. Defendant's Exhibit D-78. And my

instruction to our engineers was to use that as a pattern for their design. And we did that, plus the fact that we used some of the same parts that were actually used in the Sport King outboard engine. Parts used from the Sport King engine in the Model VA, or the Model SLV engines were lifters. One item we know of. Part OB-65, on page 6 of Exhibit D-70; also part OB-361-1, on page 6, which is the oil pump barrel. The bore and stroke of the engine were identical. The location of the cam shaft and crank shaft were identical. And I believe the piston was identical. There has been a slight change in the width of the ring grooves, I think, since then,
161 but we started out with the same piston.

In the Power Head you had this plate that is shown here as Exhibit No. D-79. This casting D-79 was used as the oil sump casting when the outboard engine was applied to lawn mowers. It provided the oil sump as well as a mounting means on the mower deck. Referring to Plaintiff's Exhibit 26, which is Model VA engine catalog, there is a part on page 11, a cut of a part which is referenced No. 44 and referred to on page 13 as Mounting Flange Assembly consisting of mounting flange, oil well, oil screen and drain plug. That piece serves the same function as this Defendant's Exhibit No. 79 served when using the old Lauson outboard engine on a rotary mower. On this plate, Defendant's Exhibit No. D-79, this round circle that is bordered by five holes — I mean on the under side — is known as the mounting circle. I think it is approximately an 8-inch bolt circle. We
162 use an 8-inch bolt circle on the mounting circle, or base plate, because in the early 1940's, when rotary mowers first came out, there seemed to be a pattern being established for this type of a circle mounting. As was

Page of Transcript

earlier shown in the McCullough engines, the first two-cycle McCullough lawn mower engines had such a circle, and we adopted a circle similar because it appeared to be adaptable to rotary-type lawn mowers. And since, that circle has become standard in the industry. McCullough is a manufacturing company who manufactured chain saws and now they manufacture rotary mowers. And they manufactured at one time, probably still do, two-cycle engines for uses such as power mowers.

The demand for a light weight lawn mower engine originated probably with the coming up of the two-cycle engines. Two-cycle engines for rotary mowers were substantially lighter, let's say, in the middle '40's than any cast iron engine used for the same purpose. And the merchandising experts were trying to sell rotary mowers to people and they wanted a light weight unit; easy to move around. Two-cycle engines seemed to answer part of that problem. Four-cycles were too heavy.
163 That was the thing that caused us to get into lighter weight engines. These two-cycle engines were made generally of die cast aluminum castings, and most of them had sleeves in the cylinder bore cast in such as Power Products, Clinton, and others. Some of the others that were making two-cycle aluminum die cast engines for power mowers prior to, we will say, 1952, were Jacobsen, McCullough, and I believe Propulsion Engine Company of Kansas City, I think. Power Products at Grafton. West Bend Engine Company. Outboard Marine was making a power motor, or engine, for a power mower. They still do make a two-cycle engine for rotary-type power mowers. They purchased the RPM plant, and then started to make their own engines. We make some cast iron, vertical shaft, four-cycle, air-cooled engines for

Page of Transcript

164 rotary-type power mowers. We sell some. I believe Clinton makes some. All of the vertical shaft engines that Goodall uses on one of his models are still cast iron and made by us. We also make a three and one-half horsepower vertical cast iron shaft engine that is used by such people as DeVere, some others, King Manufacturing. We still make that. Wisconsin Motor Corporation Division of Continental Motors makes a vertical shaft, I believe, four-cycle, for Toro, I think in about a six horsepower, I believe.

We manufactured the engine of Bosma Patent 2638881 about 1949. That was the RSV-750. That is the engine we started to produce after we discontinued the Power Head. That was the next new version of vertical shaft engines. The original of that was the RSV engine. The RSV engine was normally a horizontal shaft engine.
165 And we converted that, or modified it into the engine shown in Bosma 2638881. The main reason we went to the engine shown in the 881 patent instead of continuing the Power Head was we were very well tooled on this Model RSV engine, which later became Model RSH. We had excellent tooling. It was a production item with us. We had a good demand for it in the horizontal version, whereas on the other engine, the old outboard engine, Exhibit D-78, our tools were of the most modest type.

STIPULATION

Mr. Jones: If A. S. Bosma were called as a witness he would testify that he designed the Sport King and the Power Head motors, and that the drawings, Exhibits D-72 to D-77, inclusive, are drawings of such motors.

Page of Transcript

Mr. Raisch: And that the Sport King engine and Power Head engine were designed and built as shown in the drawings, Exhibits D-72 to D-77, and in the manuals, Exhibits D-70 and D-71, and as exemplified by Exhibit D-78, and that the Power Head and Sport King
166 engines were made and sold in quantity during the period of 1940 to 1947.

Mr. Jones: I am generally in accord with that. In the quantity made and sold as testified to by Mr. Bruns. It is so stipulated.

---

167 CLARENCE P. DAMON

Direct Examination

Clarence P. Damon, thirty-seven years old, and I reside at Tecumseh, Michigan. Employed by the Clinton Machine Company. I am the Assistant to the Director of Engineering.

I am familiar with the Sport King, Exhibit D-78. I was instrumental in obtaining that for the defense.

169 In transforming the Sport King Outboard to a Power Head unit the crankcase, the steering bracket, the steering bracket adjustment swivel, the drive shaft, the steering handle, the oil filler plug, gear housing, propeller, propeller nut, baffle plate, exhaust outlet, and exhaust tube are removed, which constitute the lower unit and column assembly. You don't remove the steer-
170 ing bracket and clamp screw from the bracket. That comes off with the steering bracket, it comes off as one unit. In Defendant's Exhibit D-71, on Page 10, the oil base, identified by the figure 70, is substituted in place of the parts removed. That is Defendant's Exhibit D-79.

Page of Transcript

172 This crankcase and cylinder, the red part, is a piece of cast iron, sand cast. That part is not changed in transforming the Sport King into the Power Head.

On the end of the crankcase here, opposite the cylinder, there is a small plate, diamond shaped, about seven-eights of an inch in diameter and fastened on by two
173 bolts. By examining it, I would say that it was to facilitate production, for attaching the screws, tightening the screws, and the connecting rod. The screws that hold the connecting rod cap to the connecting rod forming a bearing for the crankcase. If that little hole that is covered by this plate that I just alluded to were omitted, you would be able to fasten the connecting rod to the crankcase. I did it to see if it could be done.

STIPULATION: For the purpose of mounting the Clinton VS-700 engines on the decks of its rotary power mowers Hummer Manufacturing Co. manufactured its own mounting bracket or adapter plate which was bolted onto the mounting pad which is the bottom face of the crankcase wall of the VS-700 engine, and this adapter plate in turn was bolted onto the deck of the mower.

Hummer Manufacturing Co. manufactured and used the mounting bracket Part No. L14-238, shown in Exhibit D-84-A attached hereto, to mount the
176 VS-700 engines on the decks of mowers made by Hummer from 1949 to the fall of 1951. A mounting bracket like that shown in Exhibit D-84-A is offered herewith.

Rotary power mowers shown in Exhibits D-84-B and D-84-C, employing the Clinton VS-700 engine and the Hummer L14-238 mounting bracket shown

Page of Transcript

in Exhibit D-84-A, were sold in the United States by Hummer in the latter part of 1950, and during
177 1951 production quantities of such mowers were sold through Montgomery Ward stores.

In the fall of 1951 the mounting bracket which Hummer made for mounting the VS-700 engine on its mowers was changed from the type shown in Exhibit D-84-A to that shown in attached Exhibit D-84-D. The mounting bracket shown in Exhibit D-84-D was also given Part No. L14-238 and was interchangeable with the mounting bracket shown in Exhibit D-84-A, the principal difference being that the mounting bracket assembly shown in Exhibit D-84-D employed rubber pads to reduce vibration and stresses on the engine. A photograph of the Exhibit D-84-D mounting bracket is attached hereto and identified as Exhibit D-84-E. The mounting bracket shown in Exhibit D84-E is offered herewith.

The lawn mowers manufactured by Hummer Manufacturing Co. employing Clinton VS-700 engines mounted on the decks of the mowers by the above said mounting brackets made by Hummer Manufacturing Co. were made in production quantities from February 1951 on, and such mowers were shipped by Hummer Manufacturing Co. to the va-
178 rious branch stores of Montgomery Ward and were sold by Montgomery Ward through such branch stores throughout the United States.

All of the VS-700 engines used on mowers manufactured by Hummer Manufacturing Co. were purchased without the mounting flange Part No. 4400 normally supplied by Clinton, and all such engines

Page of Transcript

were mounted on the decks of the mowers by one of the bracket assemblies made by Hummer Manufacturing Co. and shown in Exhibit D-84-A or D-84-D. The only vertical shaft engines which Hummer Manufacturing Co. used on its rotary power mowers during the years 1950 through 1954 were Clinton VS-700 engines.

* * * *

181 After the Clinton lightweight engine became available, Hummer Manufacturing Company no longer purchased the VS-700 engine, except in negligible quantities.

On certain of the mowers manufactured by Hummer Manufacturing Company there is a drive from the engine by which the lawn mower is propelled and, on such mowers, the standard Clinton lightweight engine is mounted on an adapter plate manufactured by Hummer and which permits bodily shifting of the engine to provide for adjustment of the tension of a power transmission belt through which the engine torque is transmitted to the driving wheels which propel the mower.

On those of its mowers which do not provide for power propulsion of the wheels and which employ the Clinton lightweight engine, the engine is mounted directly on the deck of the mower with no adapter plate being used.

183 *The Witness:* With respect to Exhibit D-85, the adapter plate, which was attached to the engine, is normally sold as a part of the assembly.

* * * *

Page of Transcript

191 With reference to the VS block, Plaintiff's Exhibit 19, no change was required in the block or in the complete VS-700 engine to permit the use of any of the three different adapter plates, the Clinton adapter plate, Exhibit D-87, the Hummer plate, D-88, and the Hummer plate, D-89.

• • • •

195 STIPULATION: Hainke Mower Company, having a place of business at 527 North Fontron, Hutchinson, Kansas, or its predecessor in business, began in 1949 to manufacture rotary blade power lawn mowers employing Clinton VS-700 engines as the power source for such mowers.

In 1949 and following years Hainke Mower Company purchased VS-700 engines from Clinton Machine Co., Inc. for use on rotary power mowers. The VS-700 engines were purchased from Clinton without the Clinton mounting flange or adapter plate, Part No. 4400, which Clinton manufactured and normally supplied for use with the VS-700 engines.

In 1950 and 1951 Hainke Mower Company manufactured and sold in the United States a rotary blade lawn mower known as the "Whirl Cut" mower which employed a Clinton VS-700 engine as the power source thereof. The VS-700 engine was mounted directly on the deck of the Whirl Cut mower by bolts extending through bolt holes in the deck and threaded into the tapped holes in the mounting pad, which is the bottom face of the crankcase casting of the VS-700 engine. A deck employed in the Whirl Cut mower and onto which the VS-700 engine was thus mounted without the use of an adapter plate or mounting flange is shown in the

Page of Transcript

attached photograph identified as Exhibit D-90-A hereof.

196 During 1950 Hainke Mower Company manufactured and sold in the United States a Model D-19 rotary lawn mower which employed a Clinton VS-700 engine as the power source. The VS-700 engines used on the D-19 mowers were purchased without the Clinton adapter plate, and were mounted on the decks of the D-19 mowers by means of an adapter plate manufactured by Hainke Mower Company. The adapter plates manufactured by Hainke Mower Company and used on the D-19 mowers for mounting the VS-700 engines on the decks of such mowers were bolted onto the mounting pad formed on the bottom wall of the crankcase of the VS-700 engines and were in turn bolted onto the decks of the D-19 mowers. A photograph of an adapter plate manufactured by Hainke Mower Company and used for mounting the VS-700 engine on the deck of a D-19 mower is shown in the attached photograph identified as Exhibit D-90-B.

In 1951 and subsequent years, Hainke Mower Company manufactured and sold in the United States Model No. E53SP rotary power lawn mowers which employed Clinton VS-700 engines as the power source. The Clinton VS-700 engines used on the E53SP mowers were purchased by Hainke Mower Company without the Clinton mounting flange Part No. 4400. Hainke Mower Company mounted VS-700 engines on the decks of the E53SP mowers by means of adapter plates manufactured by Hainke Mower Company, one of which adapter

Page of Transcript

197 plates is shown in the attached photograph identified as Exhibit D-90-C hereof. Such adapter plates were bolted onto the mounting pad of the VS-700 engines and were in turn bolted onto the decks of the E53SP mowers. The Exhibit D-90-C adapter plates carried an additional bearing for the power take-off end of the crankshaft. Such adapter plates also incorporated power take-off means for taking power from the crankshaft to provide motive power for driving the wheels of the E53SP mowers. Hainke patent No. 2,688,224, copy of which is attached hereto as Exhibit D-90-D, shows an adapter plate like that shown in Exhibit D-90-C and shows the manner in which such adapter plates were used to mount Clinton VS-700 engines on the E53SP mowers.

* * *

198 When Clinton Machine Company brought out its lightweight engine in 1954, Hainke Mower Company was sent a small number of them for testing. At first, Hainke Mower Company decided against using the lightweight engine, preferring to continue with the cast iron VS-700 engine because Hainke felt that such an engine had better quality, and it was interested in producing a quality product. However, later in 1954, the market demand for a lower priced mower impelled Hainke to go to the lightweight Clinton engine, and it is now using the VS-100 and VS-2100 Clinton lightweight engines, as well as Briggs & Stratton lightweight engines to the extent that they are available to it; and when its requirements for lightweight engines cannot be satisfied by four-cycle engines, Hainke uses two-cycle engines made by Power Products Co. Hainke also continues to use the Clinton VS-700 engine.

At the present time Hainke Mower Company uses no mounting adapter between the engine and the lawn mower deck on any of its mowers, whether power propelled or push models, and whether powered by a cast iron or a lightweight engine. In each case where it uses Clinton engines, Hainke Mower Company now does so with the mounting flange supplied on the engine by Clinton Machine Company, and this has been its practice since at least the time the lightweight engine was introduced.

* * * *

201 *The Witness:* No change was required in the block of the 700 vertical shaft engine of Clinton to adapt it or use it with the adapter plates Defendant's Exhibits D-91 and D-
202 92. With reference to Exhibits D-91 and D-92, in so far as the cylinder casting for the VS-700 engine is concerned, those adapter plates Defendant's Exhibits D-91 and D-92 are interchangeable with the adapter plates Defendant's Exhibits D-87, D-88, and D-89. They all have the same mounting holes and the hole provided for the crankshaft to pass through. All of these adapter plates are made to fit the mounting pad on the vertical shaft of the 700 engine.

203 STIPULATION: The VS-700 engines which Propulsion Engine Corporation used on the Westline mowers were purchased from Clinton Machine Co., Inc.
204 without the Clinton adapter plate Part No. 4400 manufactured by Clinton and normally supplied for use with the VS-700 engines.

The Clinton VS-700 engines were mounted on the decks of the Westline 2X-1225 mowers by means of adapter plates manufactured by Propulsion Engine

Page of Transcript

Corporation. Exhibit D-93-B is Drawing No. W-9010 showing the cast iron adapter plate manufactured by Propulsion Engine Corporation in 1950 and 1951 for mounting the Clinton VS-700 engines on the decks of the Westline mowers. The W-9010 adapter or mounting plate (underscored in red, page 19, Exhibit D-93-A) was bolted onto the mounting pad formed on the bottom crankcase wall of the VS-700 engine and was also bolted onto the deck of the Westline mower. Exhibit D-93-C is Drawing No. W-9010A, dated January 3, 1950, which shows an assembly consisting of the W-9010 adapter plate having a needle bearing and an oil seal assembled
205 thereto, the crankshaft of the Clinton VS-700 engine journaled therein, and a mower blade attached to the crankshaft.

Exhibit D-93-D is Drawing No. VE-955 showing an assembly consisting of the W-9010 adapter plate and the needle bearing and oil seal employed therein. The assembly shown in Exhibit D-93-D forms a part of the assembly shown in Exhibit D-93-C. The Exhibit D-93-D adapter plate assembly was used in 1950 and 1951 to mount the VS-700 engines on the decks of the Westline mowers.

Exhibit D-93-E is Drawing No. 1890378 which is an assembly drawing of Model 2X-1225 mower manufactured and sold by Propulsion Engine Corporation for the 1952 season beginning prior to May 1952 and showing the Clinton VS-700 engine mounted on the deck of the mower by the VE-955 adapter plate assembly shown in Exhibit D-93-D. The mounting pad on the VS-700 engine is captioned "Mounting Pad" in red on Exhibit D-93-E.

* * * *

Propulsion Engine Corporation of 311 Marion Avenue, South Milwaukee, Wisconsin, continued to use Clinton VS-700 engines on its lawn mowers through 1953 and part of 1954. However, when the Clinton lightweight engine became available, Propulsion Engine Corporation went to that engine, and at the present time uses no cast iron engines. It presently uses as many Briggs & Stratton lightweight engines as it can get, and also uses lightweight Clinton engines.

Propulsion Engine Corporation has been a manufacturer of two cycle engines, but to conform to the demand in the trade it is concentrating on production of lawn mowers powered by lightweight four cycle engines, discontinuing the manufacture of two cycle engines, and making only a few mowers powered by two cycle engines made by another manufacturer to be sold as low priced "leaders".

On push mowers, Propulsion Engine Corporation mounts the lightweight engines, as they come from the factory, directly on the lawn mower deck, without any intermediate adapter plate. In the case of self-propelled mowers, the lightweight engine is mounted on top of a gear box which is in turn mounted on the mower deck. The engine crankshaft extends down through the gear box, which provides for the power take-off for the propulsion drive, and the lawn mower blade is fastened on the bottom of the engine crankshaft.

Page of Transcript

The Witness: The adapter plate in Defendant's Exhibit D-93-A, Page 19, is specified as Part No. 211 and is fastened to the lower section of the crankcase on the mounting pad which is an integral part of Plaintiff's Exhibit 19 and would be attached through the same four mounting screw holes as formerly used on the other adapter plates.

209 There are four holes on Defendant's Exhibit D-94 which will register with the four tapped holes on Plaintiff's Exhibit 19, and attachment is made in this way with cap screws being inserted through a plate and on into the mounting pad of the crankcase and cylinder block. There are additional holes in the adapter plate for mounting it to the lawn mower deck. Exhibit D-94 attaches to the same engine as the adapter plate I have previously testified to, Exhibit D-88 and Exhibit D-89 which are adapter plates used by Hummer, and Exhibit D-87 which is the Clinton adapter plate, and would require no changes
210 in the engine proper to make such application. No changes are required in the crankcase and cylinder block.

* * * *

213 The mounting means on the McCullough engine, Exhibit D-7, are substantially the same as the mounting means used on the adapter plate for our VS-700 engine, Exhibit D-87, only here they are cast as an integral part of the cylinder block. I think the eight inch bolt circle was standardized from the McCullough engine, now used on our 700 as well as our lightweight.

214

CARL WOLCOTT

Direct Examination

Carl Wolcott. Jackson, Michigan. I am in the job die casting business. The name of my company is Die Cast Corporation, in Jackson, Michigan. I have been with that company approximately ten years. I am a part owner. I was one of the founders of it, and, at the present time, I design the dies and partly attend to sales and
215 the general operation of the plant. I am Vice-President. I am in charge of running the plant.

It is a job die casting operation. In the job die casting business we take blueprints from the customer and redesign in a sense of changing dimensions into die casting for building the dies and presenting samples to the customer. We maintain about ten die makers, but we also have some work done outside. We make die casting equipment at that plant. In connection with our work, we consult with our customers pertaining to the designing of parts for die casting. Our customers often bring a part into us that is already made and tell us that they
216 want us to die cast that part. In such cases, it is our practice to design and build dies for such parts. We also design and build dies for die casting from customer's blueprints.

Q. In the case of parts that are brought to you for die casting where such part might be, say, sand casted, is it your general practice to, in making such a part as a die cast, to make it exactly as it was made as sand cast, or is it your practice to recommend design changes

Page of Transcript

in the part so as to make the same more suitable for die casting operations?

A. Yes, after looking over the blueprint or the part if it is more desirable to change the contours, or draft, or dimensions, wall thickness, parting line, and so forth, we do so.

217 My company has about 150 men in its employ at the present time. About ten of these are die makers. We have 12 die casting machines at the present time. We
218 make die cast parts for all classes of trade.

We are at the present time producing die cast engine parts for Power Products. We die cast the complete engine. It is made in several parts. Also for Lauson, Clinton. We make cylinder crankcase blocks for Clinton. We made parts for Clinton as far back as 1947 and 1948.
219 With reference to the cylinder and crankcase block for the one cylinder lightweight engine of Clinton, I believe we began producing that block for Clinton in 1953. Prior to that we produced a two-cycle engine block which was one piece. I believe it was for the Clinton VS-200 two cycle engine.

Some of the most important advantages of using die castings, of course, are the reduction in cost. The die casting actually eliminates the drilling of holes and considerable machining and many times where parts were fabricated they can be cast as one unit. When a customer
220 comes in with several parts possibly that might be sand casted, or a blueprint, it might be advisable to advise the customer that those can be cast as one and eliminate fabrication of those different parts. It is common practice in die casting to die cast as one part a number of parts which previously might have been made separately.

Page of Transcript

Die casting in itself, that is the art of die casting, produces much stronger castings with the same wall thickness so that, therefore, if the customer asks for certain stresses the weight can be cut considerably by die casting. There is more uniformity in the parts that are die cast as compared with those that are sand cast. These ad-
221 vantages or characteristics of die casting were recognized when I went in the business and before that.

Q. Will you tell us what some of the principal qualities are which determine whether one would use die casting techniques to make a part?

A. Well, of course, one of the main objects is mass production. It is much easier to get the cost of the dies down, when you mass produce anything, than it is when you make only a few. That is one of the major considerations. Of course, there are many parts that are not mass produced which are die cast because actually there is no other way to make it.

Q. With respect to die casting, is there any advantage that the die casting process offers in the contour of the form of the part that is made as compared with other processes?

A. Yes, the surface texture of a die cast, nothing must be done to it particularly before painting, and it gives a very clean looking job, whereas a sand cast, or permanent mold does not lend itself to a good finish when it comes out of the mold. With a die cast part you get a relatively smooth surface.

223 This die cast, Defendant's Exhibit D-95, has undercuts in the casting. The main under-cut is where this core meets this core in here, and it is obvious by the parting line that this core is oscillated back and forth,

Page of Transcript

as the die opens, to clear the core, from this other one which kisses it in here. When I am talking about a core, I am talking about part of the steel die. Kissing cores were used in the production of that casting. The term, "kissing
224 cores", is merely one core meeting another one, either on its whole diameter or on the side, which forms a passageway in a casting. In the case of the casting, where kissing cores were used, in the production of it, they left an under-cut in that case.

225 Refer to Page 166 of "Die Casting" by H. H. Doehler (1951), and beginning on the second paragraph, the first sentence thereof reads: "If it is within the limits of size and weight imposed by commercial machines, almost any part can be die-cast." That is true. The next sentence says: "But if the commercial and mechanical advantages of the processes are to be fully realized, each part must be specifically and carefully designed for die casting." I would say that that was true. The next statement: "To take a design originally intended for a sand casting, plaster-mold casting, or some other method of manufacture and apply it without appropriate changes
226 to die casting is apt to result in unreasonably high cost, unnecessary complicated manufacturing problems, and impaired strength." That is true. In the third paragraph, the second sentence reads: "The designer should always consider the advisability of combining several or all of the components into one unit." I would say that that was true. That is to say, it is common practice to combine in one unit a number of parts which theretofore might have been produced separately. Page 167 shows three different illustrations designated as "A", "B", and "C". They show three different views of the same section, and one of them, designated by the letter "A", is

Page of Transcript

undesirable or it has the under-cut in yet. An under-cut in a die cast presents the problem of putting in a loose core which slows down the production and adds
227 to the cost of the die itself so that any under-cut, if it can be eliminated, it is done so during the designing stage. In this particular part, Defendant's Exhibit D-95, the problem is to pull this core, in the parting line area—this is the parting line here (Indicating) and that being the parting line of the die the problem is to pull this core in the same direction as the die opens, and, in doing so, you find that an under-cut is in here which prevents the core from being pulled in the straight motion of the opening and closing of the die so that this core must be pulled either prior to the opening of the die or prior to the ejection of the casting, and, in this case, the core is not straight here, but it is straight clear back in here and it oscillates in an arc. As the die opens and closes it can be actuated by mechanical means, and this particular piece is made in two pieces — I am talking about the piece of steel on the core that oscillates around in an arc and can be forming the under-cut in here—and this other core comes in at an angle and this, being the under-cut here, it oscillates around as the die opens up, or prior to the die opening. It is perfectly feasible in
228 die casting practices to make under-cuts in parts. But the principal objection to that is the addition in cost of the die, and it slows down production considerably.

Q. You described an oscillating core, the use of an oscillating core in connection with the formation of an under-cut. Are there other die casting techniques which are available, and which were available in 1951 for performing under-cuts in die cast parts?

A. Well, the use of the loose core which means that the core is loose in the sense that one core is pulled

DEFENDANT'S EXHIBIT D-96

DIE CASTING

BY

H. H. DOEHLER

Chairman of the Board, Doehler-Jarvis Corporation

FIRST EDITION

McGRAW-HILL BOOK COMPANY, INC.

NEW YORK TORONTO LONDON

1951

CHAPTER 4

DESIGN OF DIE CASTINGS

Two paramount considerations govern the design of die-cast parts, namely *part quality* and *economy of production*.

If it is within the limits of size and weight imposed by commercial machines, almost any part can be die-cast. But if the commercial and mechanical advantages of the process are to be fully realized, each part must be specifically and carefully designed for die casting. To take a design originally intended for a sand casting, plaster-mold casting, or some other method of manufacture and apply it without appropriate changes to die casting is apt to result in unreasonably high cost, unnecessary complicated manufacturing problems, and impaired strength.

It is important to remember that the part will be cast in two halves of a die, that the die and cores will be made of solid metal, and that the part must be drawn out after the molten metal has solidified. Unlike sand castings, which are shaped by sand molds and cores that are destroyed after one part is made, die castings are formed by molds that must be used for large-quantity production. Thus, if the part is anchored by a projection or depression at an angle to the direction of removal, special and costly die construction must be resorted to, as will be discussed later in the chapter.

Parts of an assembly or assembled sections must be designed so that they occasionally can be separated. The designer should always consider the advisability of combining several or all of the components into one unit. Of course, there is a limit prescribed by the size and complexity of the combination. Sometimes the whole assembly can be taken care of with more than one die casting and still show marked savings in assembly and fitting cost. The possibility of casting in separately machined or otherwise fabricated parts, which are cheaper to produce by themselves than as part of the die casting and/or which locally impart specific properties not inherent in a die casting, is a powerful aid in making simplification of construction and over-all reduction of cost possible.

Even when all components of a rigid and permanent assembly cannot be combined, assembly of several die castings into the whole is made easier and less costly than is possible with most other methods of fabrication by providing integral fastening devices in the die casting, which

in assembly are riveted, staked, or spun over. This obviously is only feasible with highly ductile materials such as zinc and some of the aluminum and brass alloys.

SELECTION OF PARTING LINE AND GENERAL DESIGN

The first step of the designer in modifying or projecting a design for die casting is to select the parting line; the line on the part at which

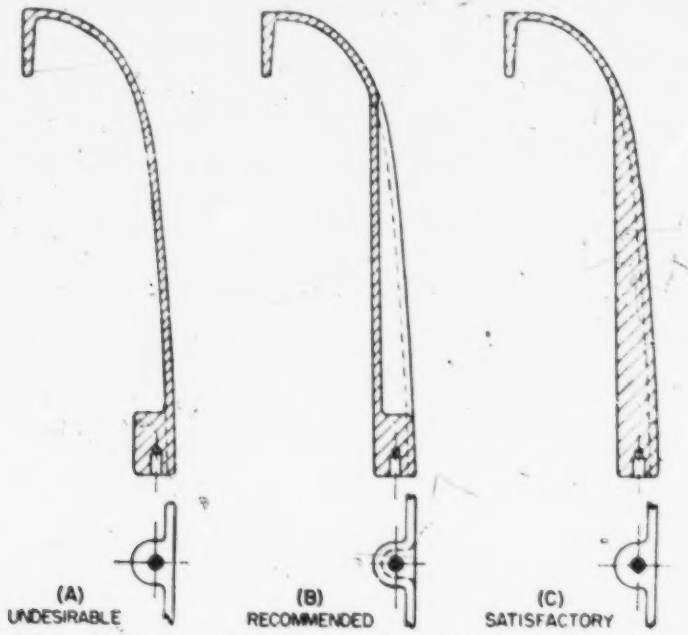

FIG. 41. Three designs for a die-cast part. That at *A* is undesirable because it is undercut and requires movable or loose die members to cast. That at *C* has no undercuts but requires more metal to cast. Neither of these disadvantages apply to the design shown at *B*.

the two halves of the die meet. Admittedly this usually is in the province of the die designer, but a knowledge of the end use of the casting is often essential when determining where the parting line should fall. The development engineer should always strive to modify the part design in order to provide for more speed and economy of production, with due consideration for the cost of trimming and finishing.

A flat or straight contour at the parting line is always preferable since the casting die is cheaper to construct, trimming dies are less expensive to build, and both types of dies are easier to maintain. This does not

mean that curved or irregular parting lines are not practical, but usually the matter is one of economies rather than of practicality of operation.

Actually, two primary factors govern the selection of the parting line:

1. Removal of the part on completion of the casting cycle.
2. The cost of constructing and maintaining casting and trimming dies and other cleaning equipment.

To these might be added other considerations such as efficiency of gating and venting; placement of ejector pins; and size, position, and type

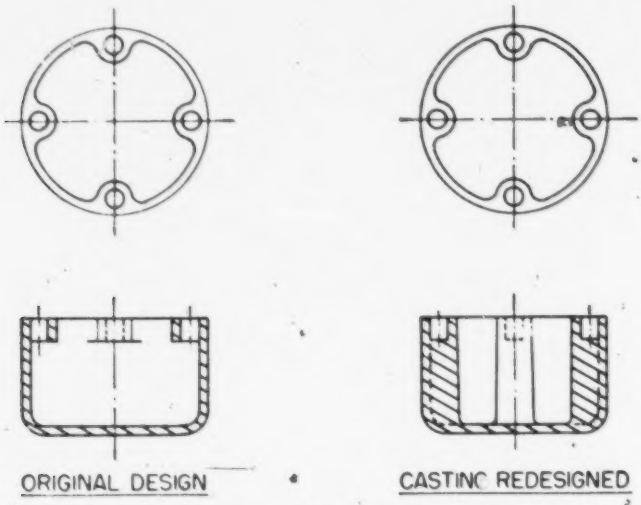

FIG. 12. Another example of how a casting was redesigned to simplify ejection on completion of the casting cycle. No undercuts are present in the redesigned part.

of cores required. Many of these are covered in detail in Chap. 2, Die-casting Dies.

As has previously been pointed out, the casting will be made in a rigid, inflexible die; therefore, the parting line must be selected so that the casting can be withdrawn after the shot is made. In general, the plane through the casting having the largest cross-sectional area should correspond to the parting plane. Failure to design the part with this in mind results in an undercut and usually necessitates costly die construction.

For example, the part shown at *A*, Fig. 4.1, is representative of a poor design. To cast it successfully would require either loose die pieces or an even more expensive collapsible core and operating mechanism. The design at *C* is better and can easily be produced, but it requires more metal to cast. The best design is that at *B*: it involves no undercuts, has a uniform wall thickness, does not have a large sectional bulk and can

RATE OF PRODUCTION

Speed of production of die castings is one of the major advantages of this process. The number of shots possible with a modern die-casting machine depends upon the material. It is high with low-melting-point alloys and progressively lower with higher melting point alloys. It also varies with the size of the casting, its complexity; the number, shape, and location of the cores and inserts; and special requirements.

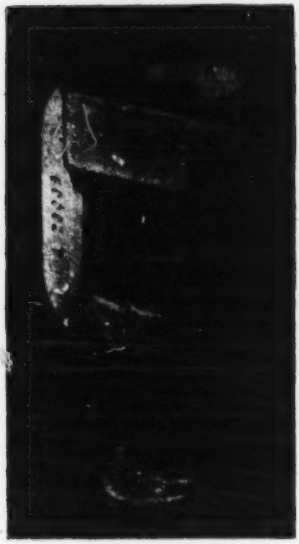

FIG. 5.2. Magnesium bolster for a ball-bearing spindle weighs 0.384 lb, measures 6 in. in height, and is cast on a 45-sec cycle.

Several hundred shots per hour is not unusual when die-casting small, relatively simple shapes from low-melting-point alloys. Even with larger, more complex shapes the casting cycle is short; the magnesium part shown in Fig. 5.2, which weighs approximately 0.384 lb and measures roughly 6 in. over-all, is cast on a 45-sec cycle. Definitely, then, die casting is a high-production process and therefore is generally not economical for parts made in limited quantities.

As a general proposition, the rate of production of die castings is higher than for corresponding parts made by any of the other casting processes: plastic molding, drop forging (except of very simple shapes), die pressing, and stamping and drawing (again except of simple shapes). It is, however, apt to be somewhat lower than for parts made on automatic screw machines and on automatic powder-metal presses. Molded thermoplastic materials of simple shape are nearest in speed of production to die casting; thermosetting resins must be cured before being removed from the press and so require a considerably longer time to produce. Sand casting, plaster-mold casting, and precision-investment casting generally are not considered to be high-production processes.

PART DESIGN AND COMPLEXITY

Another outstanding advantage of the die-casting process is that complex shapes can be made that would be difficult, if not impossible, to obtain by any other method—at least in large quantities. By the use of

sliding die members, undercuts and intricate holes can be formed in the part. Examples illustrating the degree of complexity that can be obtained are shown in Fig. 5.3.

For permanent-mold casting, gravitational forces are relied upon to pull the molten metal into the mold cavities. Only if centrifugal molds are used do the applied forces approach those common in die casting.

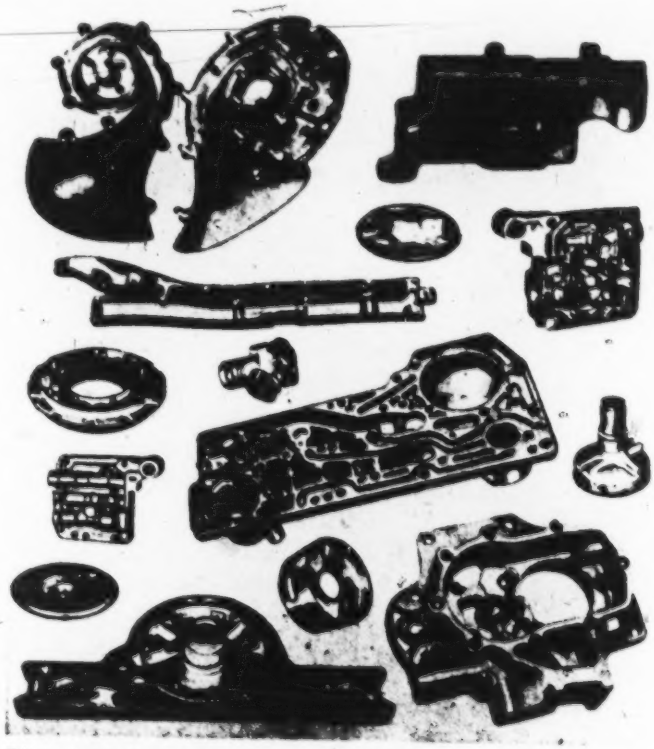

Fig. 5.3. These functional automotive parts illustrate some of the complex shapes that can be die-cast.

and as a result the metal cannot be forced in and around intricate passages and cores. Thus, the complexity of the parts that can be obtained is generally less than that obtained by die casting. The same thing is true of sand casting and permanent-mold casting.

Precision-investment castings can be made exceedingly complex, but the process usually is suitable only for small parts—7 in. or less in one dimension. The powder-metallurgy process to date has been limited to the production of relatively small and simple shapes with coring in one direction and with no undercuts, although this conceivably may change

leaving the loose cores in the casting itself. That is removed after the casting is ejected from the die.

229 On Page 210 of Doehler's "Die Casting," the first sentence of the first paragraph says: "Speed of production of die castings is one of the major advantages of this process." That is my experience. The speeding up of production, of course, could be adversely affected
230 by the complexity of the part to be die cast.

• • • •

234 The exhibit marked D-78-A could have been die-cast back at least when I first started in the business, without too many problems. It would have been about the same in 1951. I mean, we had the necessary equipment to produce such a casting, and it could have been produced. As the block is shown there are undercuts in this particular plane around here which would necessitate the using of loose cores. The undercuts can be eliminated just by putting the flange on the outside and having the undercut removed by carrying the flange out on the outer edge and continuing the flange on down to the lower part of the casting. The undercut I am referring to is nothing but an inward extended flange which surrounds the large opening in the crankcase wall of the casting. Having that flange extend into the opening, you would remove the flange so it would stick out of the opening.

Q. Now, this block has an opening closed by a small diamond-shaped plate, that opening being opposite the connecting rod in the wall of the crankcase, which is opposite the cylinder, would it have been any problem to eliminate such opening in that wall in making that part a die-casting instead of sand-casting?

A. No, it would not present any problem to eliminate the hole.

Page of Transcript

236 In 1951, based upon my experience, it would have been possible to die-cast the engine parts shown in figures 17 and 18 of the Conover patent, and the parts to which I have particular reference are the main block which forms the cylinder and the crankcase and wall 215, which forms part of the gas tank, and also the parts that are integrally connected to those parts I have mentioned.

* * * *

237 Q. Will you explain what you mean in the die-casting art by the term die inserts?

A. Well, die inserts cover a considerable area in the terms of the die-cast trade. A die-insert could be and usually is described by an operation of the complete die, which go to make up the same part or a number of possibly other similar parts. The die insert is part of the die. The main purpose of using it would be to cut the cost of the die, originally. You could make many parts from the same die possibly by interchanging the inserts. You could make many changes from the designs of the original one. In other words, you could take a basic design and introduce variations into the part by the use of die inserts. That was common practice in 1951 and earlier.

238 Q. Will you describe briefly how that cylinder liner is incorporated into the casting, [Defendant's Exhibit D-10]?

A. Well, the cylinder liner is a cast-iron sleeve which when the die is opened the sleeve is inserted on a core. As the die closes the core and the sleeve go forward and are positioned, and when the shot is made the aluminum flows around the sleeve making it a sound part of the casting.

DEFENDANT'S EXHIBIT D-98

DESIGNING FOR

ALCOA DIE CASTINGS

ALUMINUM COMPANY OF AMERICA

PITTSBURGH, PA.

1949

SECTION 1

WHERE TO USE DIE CASTINGS

The main reason for using aluminum and magnesium die castings is that they cut costs.

The decision to employ die castings in any application should be made on the basis of cost and product comparisons with other possible methods. Maximum production economy and superior product design can be achieved only by using the most suitable material and fabrication process for each casting produced.

A die casting may suit the application best if the answer to *any one* of these questions is "yes":

1. Is the quantity of parts involved considerable?
2. Is the tooling for machining expensive?
3. Do machining, assembling or surface finishing account for an appreciable part of the cost of the finished article?
4. Is a reduction of the investment in machine tools and plant floor space desirable?

Die casting is characteristically a high-speed, high-production process. For this reason, it is naturally suited to economical production on a quantity basis.

Die castings usually require very few secondary operations. Reduction of tooling cost means an important saving in over-all production expense. A relatively small number of castings frequently justifies die casting, because the need for costly machining tools and fixtures is eliminated.

The use of die castings reduces the time and expense required to complete the product. Assembly is rapid because light-metal die castings are uniform and faithful in dimension. Surfaces are smooth as cast, so that many finishing operations are simplified or eliminated.

Frequently the use of die castings is very advantageous as a measure to conserve plant facilities. The die caster supplies castings with the flash trimmed off, and in many cases they are almost ready for assembly. The multitude of operations that would be required with other fabrication methods, but which are eliminated by die casting, can free needed productive capacity for other uses.

Die Castings of the Light Metals, Aluminum and Magnesium, Offer Important Advantages

Notable design and product advantages are gained by using the light alloys for die casting.

Light Weight of die-cast parts cuts down the dead load that other structures must carry. Moving parts, especially, benefit from weight reduction.

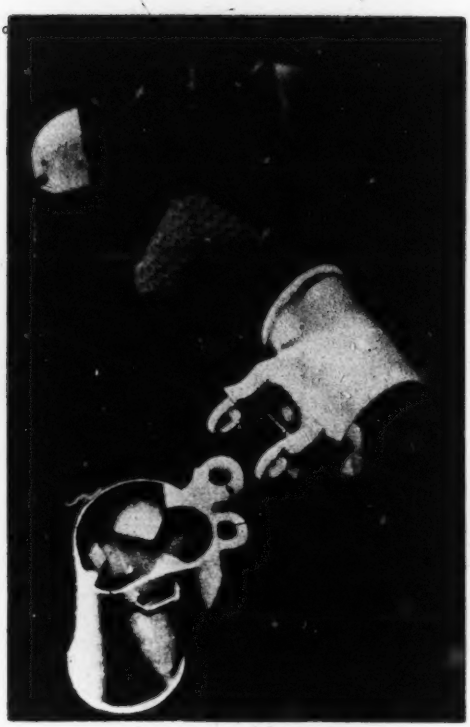

Figure 1—Produced in an Alcoa die-casting plant, these magnesium binocular bodies are light and sturdy.

Permanence of dimensions assures accuracy and interchangeability. The light metals are free from creep under sustained loads.

Higher Temperatures than other die-casting alloys permit are possible with aluminum and magnesium without excessive loss of physical properties or dimensional accuracy.

The use of die castings may originate in either a program of manufacturing cost reduction, or in a desire to improve product design, or both. Suitable applications and appropriate casting designs make both goals readily attainable.

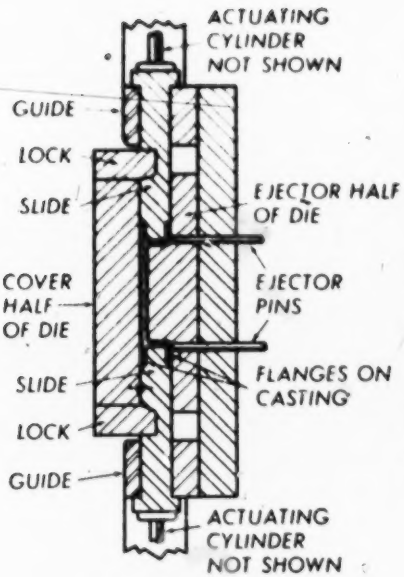

Figure 23—The flanges on this casting produce undercuts that are formed by movable slides.

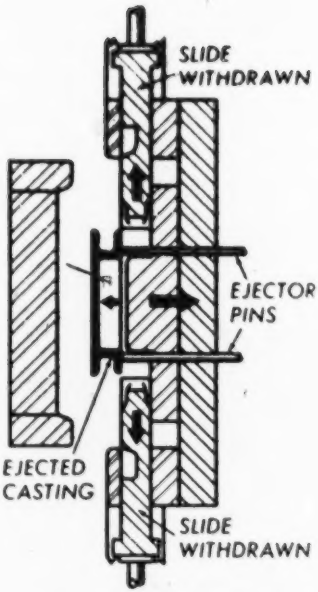

Figure 24—The slides are pulled free of the flanges before the casting is ejected.

Frequently a recess on the side of a casting is so placed that it would prevent separation of the die halves or ejection of the casting from a simple die. Such a recess is called an "undercut." The undercut surface of the casting is formed by a suitably shaped sliding block in the die. This type of core is called a "slide." It may, in turn, have fixed cores mounted on it, parallel to the sliding motion.

Movable cores and slides must be closely fitted to the surrounding portion of the die. Leakage of metal into the sliding surface clearances will cause the moving parts to bind.

Four methods of actuating movable cores are in common use: (1) Small cores may be operated manually by a rack-and-pinion mechanism similar to that used for the ejector plate. (2) A toggle linkage may be employed. The self-

locking action of a toggle holds the core in place if it must be situated where a conventional core lock would be impractical. (3) Cores may be withdrawn by the relative motion of the separating die halves. A sloping cam pin, mounted on the cover half, engages a hole in a sliding block that holds the cores. The block moves the cores in and out of the ejector half as a result of the angle at which the pin is set. (4) Hydraulic pistons, operating cores and slides, can be controlled by valves that are opened and closed either manually or automatically.

Occasionally, die castings require movable cores that cannot be operated by the methods just described. A typical example is an undercut cavity inside a box-shaped casting. Such undercuts can be cored with "loose pieces." These cores are placed in the die by hand before each shot. They are designed to be locked firmly in place when the die is closed. After the shot, the loose pieces are ejected with the

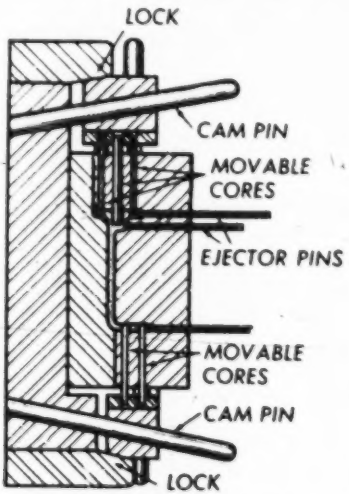

Figure 25—These movable cores in the ejector half are operated by cam pins secured in the cover half.

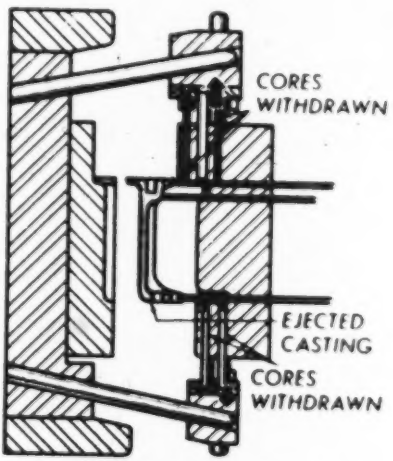

Figure 26—The cam pins pull the cores automatically as the die halves separate. Then the casting can be ejected.

casting, then removed from the casting and reset in the die. Sometimes several sets of identical loose pieces are used in one die to reduce the waiting time between shots. However, even when handled with maximum efficiency, loose pieces slow down production. For this reason, and because loose pieces make dies and die maintenance expensive, it is de-

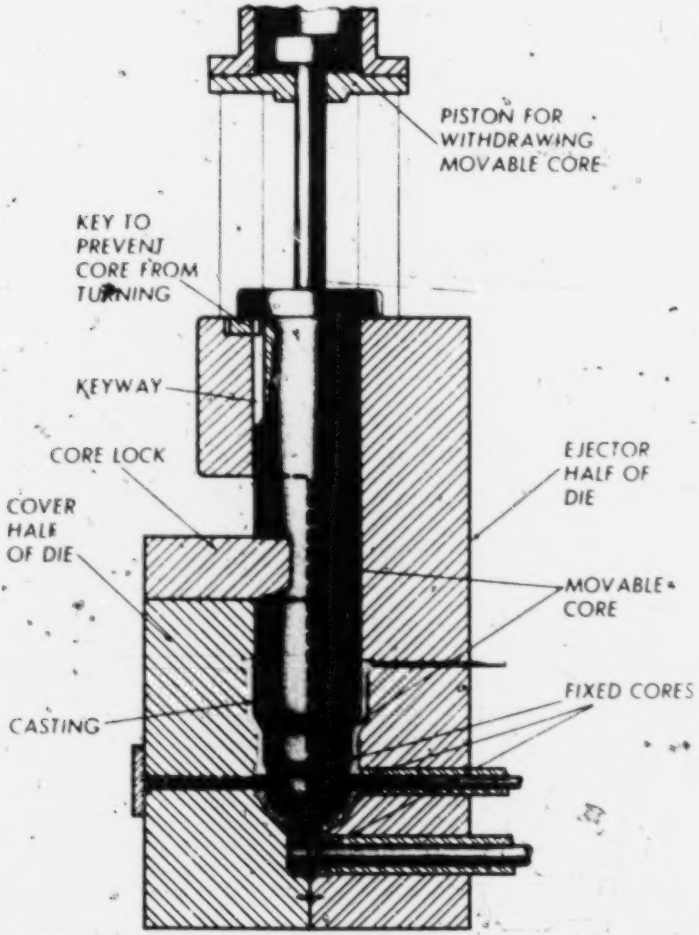

Figure 27—A large movable core forms the interior of this die casting.

sirable to modify designs with undercuts so that the use of loose pieces can be avoided.

When inserted parts, such as studs, bushings, etc., are to be cast in place, they are placed in the die by hand before each shot. The die must be provided with means for locating and locking each insert securely during the casting oper-

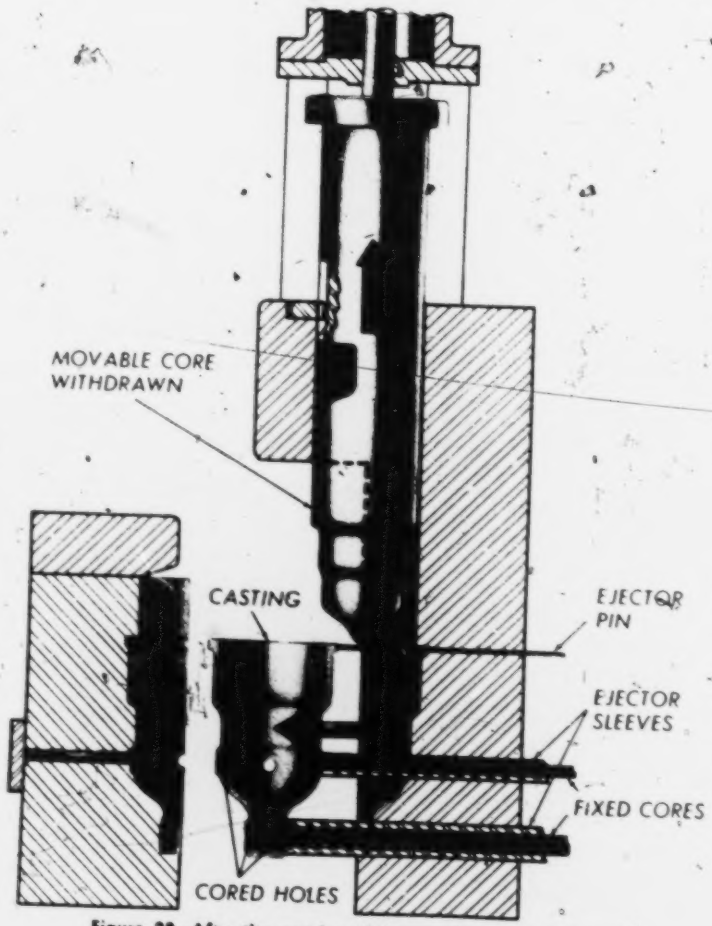

Figure 28—After the core is withdrawn, the casting is forced out by ejector pins and ejector sleeves.

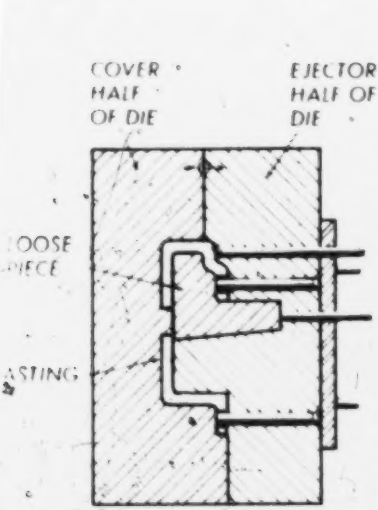

Figure 29—A loose piece is employed to core the undercut recess inside this box.

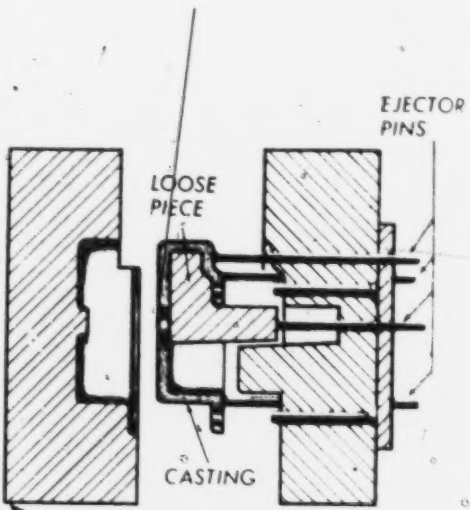

Figure 30—When the casting is ejected, the loose piece comes out with it.

Figure 31—The loose piece is removed from the casting.

ation. If necessary, the locking device is withdrawn in the same manner as a movable core to allow ejection of the casting containing the insert.

Multiple and Combination Dies Produce Several Castings per Shot

A multiple die contains a number of identical cavities, all gated from the same sprue hole. When the size of the die permits and when the quantities of castings justify it, the use of a multiple die can yield increased production at substantially lower cost.

Page of Transcript

The die-casting of that block would not involve any-
239 thing other than the use of the conventional die-cast technique in 1951.

The problem involved in die-casting engine parts for a two-cycle engine as compared with die-casting parts for a four-cycle engine are basically the same. As far as die-casting operations is concerned the machings we use would not know whether it was a part for a two-cycle or a four-cycle engine.

Exhibit D-3 does, or has incorporated in the die what is commonly known as cores kissing each other.

240 Q. Is there anything essentially different in the use of kissing cores to form the passages in the cover casting D-6 you have, as compared with the defendant Exhibit D-3?

A. No sir, basically they are the same.

241 *Cross Examination*

I never designed a gasoline engine. In our die-casting of different things we sometimes use inserts of some other metal than that of the rest of the casting in a die-casting.

Q. And then in the finished product that insert comprises a part of the complete casting?

A. It sometimes has, yes, uh-huh.

Q. It is an integral part of it, isn't it?

A. Yes, uh-huh.

We have been die-casting engine blocks like defendant's Exhibit No. D-10 for Clinton and Lauson. I believe it was 1953 we started. We started for both Lauson and Clinton about the same time.

Page of Transcript

242 CLETUS V. ERLACHER

Direct Examination

242 Cletus V. Erlacher, Jr., Maquoketa, Iowa. I started with Clinton Machine in 1946 in the material control department and as well as in shipping and receiving. I, in 1947, was given the opportunity to represent Clinton Machine as a field representative, and continued to represent them as a territorial representative through 1951 at which time I was made assistant sales manager, and continued as assistant sales manager until January of 1953.

243 I was made Sales Manager in January of 1953. I am familiar with the engine produced by Clinton during this period. In 1946 it was our 700 series.

244 In addition to the block, Exhibit D-101, for the completion of the crankcase of the horizontal 700 series engine it was necessary to have a base casting. Another main part employed to complete the crankcase on that engine was a removable wall which in engine terminology is called a bearing plate. It is needed to complete the enclosure for the crankcase. That was on the flywheel side of the crankcase. Exhibit D-102 is a fair specimen

245 of our kick starter base which is on our 700 series horizontal engine. The Exhibit D-102, was attached to Exhibit D-101 in this fashion, and required a gasket and two bolts for attaching to the cylinder block casting. These two mounting holes in the base align with the two drilled and tapped holes in the cylinder block, in this fashion.

Mr. Balluff: The witness is holding a base casting D-102 next to the cylinder block D-101.

The Witness:

The normal position of the cylinder and the crankcase in the 700 series horizontal engine is in this fashion. The

Page of Transcript

base rests on a surface of the cylinder block and the casting on top of it so that the crankshaft of the engine will be horizontal to both. In addition to Exhibit 102 Clinton
246 manufactured and adapted to the 700 series engine many different bases. I believe that at the last counting we were in excess of some 52 or 53 different bases.

STIPULATION: Clinton in connection with this horizontal 700 series engine, used a series of bases—the witness has testified there were some 52 in number and of which Exhibits D-101, -102, -103, and -104 are examples, and that these bases were used in connection with a horizontal 700 engine during the period 1946 and up prior to 1952. That is understood to be the horizontal crankshaft engine.

The Witness:

247 The main casting used in connection with all of these bases was the same casting. The reason for Clinton selling many different bases for the horizontal 700 engine was that due to the variable requirements of different manufacturers in adapting our product to theirs it was necessary to make these different bases to accomodate their application. This has been the practice within the industry for the period I have been in it. No changes at all
248 were required in the cylinder and crankcase casting to permit the use of the various interchangeable bases to which I have testified.

There is a substantial number of applications for the 700 series engine, but a few examples of what it was used on would be the power lawnmower, both rotary and reel, pumps, generators, coal conveyers, grain augers, garden tractors, rotating tillers, which is a representative list of the many applications the 700 series engine was sold for. In general we sell the majority of our products

Page of Transcript

to original equipment manufacturers, and in turn they sell their product with our engine on it to many manufacturers, distributors, dealers, and mail-order houses, large chains and the like.

249 The primary reason for the introduction of the VS 700 series engine was due to the demand being created by the rotary power lawnmower. The rotary power lawnmower having been conceived, you know, years prior to 1949, had always been an application whereby the use of a horizontal engine in conjunction with a twisted belt and mandrel assembly was required to complete the rotary type lawnmower. Previous to the introduction of the
250 VS 700 series engine there was on the market and sold commercially a vertical shaft two-cycle engine which had revealed to the manufacturers of lawnmowers the possibility of eliminating the expensive twisted mandrel assembly and twisted belt. It was because of the popular demand in this country for four-cycle engines, which was called by many manufacturers a four-cycle vertical shaft engine of which there was only to our knowledge one other being produced in May of 1949. The vertical shaft 700 series engine made it possible to produce a rotary power lawnmower at a much lower cost to the ultimate consumer and a reasonable profit to the manufacturer by the elimination of the mandrel assembly, twisted belts, and other items necessary. The principal use for the VS 700 series engine was for use on rotary lawnmowers. We have sold a substantial quantity of this VS 700 series engine in each year since the engine has been introduced. For the period in checking our records
251 it indicates we sold nearly half a million vertical shaft 700 series engines during the period prior to 1951, including 1951.

DEFENDANT'S EXHIBIT D-108

The Booming Market for POWER LAWN MOWERS

Mr. Briggs

Power mowers are being bought in increasing numbers by farmers and home owners, and the market has barely been scratched

By Sam Briggs
Sales Manager, Lawn Mower Division
Reo Motors, Inc.

THE power lawn mower industry is still new, still growing, still full of opportunities for manufacturers, for wholesalers, and for dealers. Only a few years ago power mowers were purchased only for mowing parks, cemeteries and the lawns of schools, colleges and large estates. No one thought of using a power lawn mower on less than an acre or more of lawn.

Nine years ago, in 1941, only 40,000 power mowers were produced by the industry. During the war none were built. In 1948 total power mower production was about 300,000, in 1949 about 400,000, and in this calendar year of 1950 production will exceed 600,000. This is an increase of one-third in 1949 and a further 50 percent increase this past year. Check your sales and see if you have kept pace with the industry.

There are today over 100 different manufacturers of power mowers. There are only about ten manufacturers who are doing a major job of engineering, production and merchandising of power mowers on a national scale. These ten manufacturers have produced over 90 percent of the power mower volume. They have prospered, and are splendid examples of what can be accomplished in business under the principles of free enterprise.

At least 300,000, or one-half, of the power lawn mowers manufactured this year have been sold by large national accounts, the rubber companies, and the auto accessory chains. Probably 200,000 power mowers, or one-third of the production, has been sold by wholesalers.

Power lawn mowers are being purchased today to mow parks, cemeteries, and the lawns of schools, institutions and large estates, the same as in years past. The large group of purchasers, however, is made up of professional people, white-collar workers, the skilled and the semi-skilled wage earners. With the average family income now above $3,600, power lawn mowers are no longer regarded as a luxury.

There is a basic need for power lawn mowers. They are being used with satisfaction on even small lawns. This is a mechanized age. The businessman, the factory worker, the farmer, after working with modern office equipment, precision machinery, with tractors and modern equipment can not be contented to mow the lawn except with power.

The remarkable increase in the power lawn mower market has not come about because of economy. It is true that they do save some time and money. However, many of us could never justify the purchase of an automobile today merely to save expense of transportation. We purchase automobiles because they are modern, because they are handy and convenient, because the neighbors have them, because it is fun to drive them, and because they are part of our way of life.

Power lawn mowers are being purchased for the same reasons: they are handy, they are convenient; it is fun to mow a lawn with a power mower; they are a part of our modern way of living. Any man with some grass to cut is a prospect.

Only a few years ago it was the trend of our fathers to want to sell or retire from the farm and move to the city where they could enjoy the conveniences of electricity and running water. Today the conveniences have gone to the farm. It is our ambition to leave the hubbub of the cities, and to move back to enjoy the peace and quiet of country life. Each year there are more people working, earning more money, building more homes, and there is a definite movement towards suburban areas, where they have better lawns. When driving along the highways, look at the lawns. Each year the farm lawns seem to look not only better kept, but larger. Farmers are purchasing power mowers by the thousands.

A conservative estimate is that the market for small and medium-sized power mowers is not over 15 percent saturated. It hasn't been touched yet.

There are several different sizes and types of power lawn mowers. The 20-inch and 21-inch cut sizes seem to be the most popular, followed by the smaller 18-inch and 19-inch as second in popularity. The 22 to 25 inch sizes are third in volume. Power mowers of 30-inch width and up are a specialty and sell only in small volume.

There are two general types of power lawn mowers, the revolving reel type and the rotary cutter type. The revolving reel type of power mower is regarded as the most satisfactory for mowing average lawns.

Rotary power mowers are used primarily for cutting taller grass, but in many cases are used suc-

cessfully for a combination of lawn mowing, for cutting the high grass on vacant lots, around farm buildings and similar areas. The rotary mower does not do an entirely satisfactory job of mowing a good lawn, but as a combination machine where there is a variety of cutting to be taken care of it is gaining in popularity.

The rotary type mower has been especially successful and popular in the South, where there are many types of wild grasses which come up quickly in lawn areas such as wire grass, witch grass and weeds which grow quickly.

There is a tremendous potential market for electric power mowers, yet untapped and undeveloped. The dealer, however, must bear in mind that electric power mowers are suitable only for small lawns, which can be mowed in a few minutes with a hand mower.

The name "electric power mower" is magic. When you say, mow with electricity, no fuss, no muss, no noise, no smelly gas, just plug it in like a vacuum cleaner, it is a natural for merchandising. Actually, the cord on an electric mower is not a great handicap—no more so than the cord on a vacuum cleaner. The customer with a small lawn, who comes in to buy a $35 hand mower, can be "sold up" to an electric mower. But we must be careful not to oversell the electric mower. It is a mower for small lawns only. It is not a satisfactory mower for large lawn areas.

During the past few years, the wide-awake manufacturers of power lawn mowers have done an outstanding job advertising in the trade papers and in the national magazines. I am sure that advertising has been a most important factor in creating a desire for power lawn mowers and in acquiring their status as a household necessity.

Good, aggressive advertising has paid off well for all manufacturers who have tried it. Good, aggressive advertising has paid off well for all wholesalers and dealers who have tried it.

Many times I have been asked, "When is the best time to advertise power lawn mowers?" Most bathing suits are sold in the summertime in hot weather. Most power mowers are sold in the spring and summer. My answer to the question is, watch the weather.

Start your advertising early. Try to splash large ads at the right time. Tie in with some of the national ads of the mower manufacturers if possible. Warm weather brings people in to buy, not only power mowers, but lawn seed, garden seed, lawn tools, fertilizer and all of the things that go into the ground and onto the lawn in spring. When old Mother Nature goes to work, that is the time to splash big ads. The success of an advertising campaign does depend upon the timing.

Power lawn mowers need to be displayed. Floor displays to be effective should be kept clean, should allow sufficient room so that the prospect can move around the mower, take hold of the handle and size it up in general. Window displays are very effective, and sidewalk displays are always eye catchers.

It is important to keep the machines clean, to give them room. In a sidewalk display, where possible, the engine should be started and the prospect given every opportunity to look the machine over carefully and actually run it himself.

Lawn displays, of course, are best of all. The dealer who is fortunate enough to have a small lawn in front of his store or perhaps next door, has a golden opportunity to create additional sales through the magic of demonstration.

It is of the utmost importance for dealers to have time payment plans available on power lawn mowers. It is just as necessary as on refrigerators, radios, television, furniture and similar items. The home-owner, or the home-renter, who purchases a power lawn mower is an exceptionally good credit risk, much better than the average purchaser of a radio. Local banks and loan companies have recognized that a power lawn mower time contract is a good risk, and in many cases have been taking such paper without recourse on the dealer. At the present time, Regulation W issued to curb credit extension does not cover power lawn mowers. This should be a real sales help.

The large national chain stores handling power mowers aggressively, solicit time payment business, and during the past year have sold about 40 percent of their volume on time.

During the past 20 years there has been a phenomenal growth in time selling, and it is unfortunate that independent merchants have not been getting their share of such business. In many cases, they have been not only unable, but unwilling to handle credit selling.

It is consumer credit that has enabled the American skilled and semi-skilled workers to buy more merchandise. Consumer credit expansion is, of course, now being curbed, but time payment selling is here to stay, and the independent merchant who wants to participate in the phenomenal growth of sales for power lawn mowers, or major home appliances, or any other big ticket items must offer time payment and budget plans to his customers.

(Continued on page 44)

Demonstration of the correct size and model power lawn mower to a known prospect is the most effective known method of making a sale.

The Market for Power Lawn Mowers

(Continued from page 38)

It seems to me that one of the most important tasks before wholesalers today is to assist merchants in working out plans so that they can be competitive by extending consumer credit. Banks and lending institutions will cooperate willingly to work out intelligent and workable time payment plans. The chains, with their generous extension of credit, their aggressive sales and advertising methods, have made serious inroads into the business of independent wholesalers and retailers. The chains already have nearly 50 percent of the power lawn mower business.

It is not a particularly difficult task for a wholesaler to increase his power mower sales. Wholesalers who have merely stocked and shown power mowers in their catalog have not been successful. The successful wholesalers have regarded power lawn mowers as they should be regarded—high ticket, major dollar profit items on which the expenditure of special sales and advertising, and general promotion effort is necessary and justified. From the head office right down through the organization they preach the fact that the power lawn mower business is good business, important business, profitable business which they expect to get.

Mark-ups Satisfactory

There are, however, many retailers who have lost money by purchasing off-grade or unknown brands because of the lure of extra or special discounts. In fact, many of the leading department stores have gone sour on power mower sales because they purchased discounts, or special deals, and ended up with their basements full of unsold machines. The present mark-ups on power mowers have been established gradually over a period of years and appear to be workable for manufacturers, wholesalers and retailers.

I am frankly puzzled by the occasional department store where it appears to be the policy to purchase discount and not turnover with resultant dollar profits. I am well aware that there are two sides to the "major unit of sale, gross dollar profit" premise. Whether it be on automatic washing machine or a power lawn mower:

1. The unit of investment is large.
2. The turnover is seasonal and may be slow.
3. There is danger of obsolescence.
4. A power mower should be set up and serviced before delivery, which costs money.
5. It takes a high priced, qualified and instructed salesman to sell power mowers. Any clerk can sell traffic items.
6. On power mowers there may be some service required after the sale is made.

It is because most retailers are unwilling or unable to do these required things that the opportunity is so great for those who have the facilities and the energy to do the job. All of us recognize that it requires a different type of selling to sell power lawn mowers than traffic items. Specialized selling does require good sales people, hard work, and a knowledge of the product.

I particularly want to stress the importance of the power lawn mower salesman knowing his product. It has been proved time and time again that a salesman who has actually unpacked, assembled and mowed a lawn with a power mower is a much better salesman than the one who merely sells from a catalog or from the floor. Salesmen should study all available material, but they should also get out and cut grass.

Wholesalers and retailers will find it worthwhile to stock repair parts and operate service shops. If it is impractical to do this, then they should make arrangements with some satisfactory service shop to handle parts and service. The mower manufacturer will assist in making these arrangements. There are many ways of handling service, but the point I want to make is that wholesalers and retailers must take the responsibility for service—either handle it themselves, or work with and encourage other service shops.

All of us are wondering about the prices on power lawn mowers. None of us know just what is ahead. However, it would appear that increases may not be over.

Price is an important item in merchandising power lawn mowers, but it certainly is not the most important.

Are power lawn mowers going to be available in plentiful supply during the coming season? Our United States economy is entering a new phase, we are now rearming in the midst of high civilian production. The rate of defense spending is rising. Our first job is to rearm. The defense order priority system is being used to channel all materials needed into war work. Now, in addition to the overall priority system, special restrictive orders are being issued covering the use of such scarce materials as copper, zinc, aluminum, cobalt and rubber. All of these scarce materials go into the manufacture of power mowers.

Future Outlook

Probably the industry can continue to produce a fair volume of power mowers even with a cut back on aluminum, copper, zinc, cobalt, manganese and rubber, but what is going to happen if it is necessary to restrict the use of iron and steel?

Production of power lawn mowers this past fall and winter has been at an all-time high, but mowers are selling readily at retail. Stocks as of January 1st in the hands of manufacturers, wholesalers and retailers were probably about the same as a year ago.

I am sure that every major manufacturer of power mowers is doing his best to produce mowers on a businesslike basis. I do not know of a single manufacturer who will not consider himself fortunate if materials are available to produce as many power mowers during the first six months of 1951 as he produced during the same six months in 1950. That was a lot of mowers. It may or may not be sufficient to supply the demand next spring, but it will take some selling if that many are produced so let us not let up in our selling efforts.

There is surely cause for concern for business in the months ahead, but production continues high and the power mower business has not suffered greatly so far. No one knows what the present situation may develop into, but manufacturers, wholesalers and retailers—all of us—will surely come out best in the long run by avoiding speculation, adhering to sound operating practices, keeping up the quality of our merchandise and service, and meeting each new situation with resourcefulness.

CUT IN on the POWER MOWER BOOM

Reprinted for your convenience
from the JUNE 1951 issue of
ELECTRICAL MERCHANDISING.

CUT IN on the POWER MOWER BOOM

A 70% sales increase last year made power mowers an $80-million business—yet fewer than four out of 10 appliance dealers are handling this newest and most popular sideline. Service is negligible, prices start in the fifties and the average home owner is today's top prospect

By JOHN DECKER

FOR the average property owner the "day of the power lawn mower" appears to be here to stay.

In the postwar period alone, power mower sales have skyrocketed until today many observers believe the annual volume of the approximately 100 manufacturers in the field approaches $80,000,000. To realize what a yearly turnover of this magnitude might mean to the appliance dealer one need only check the sales of comparable electrical appliances. With the exception of the larger "white goods" few of these can boast of a figure even close to this, despite the fact that most appliances are year round sellers, *while mowers reach their peak sales period during the spring and summer months only.*

EDITOR'S NOTE: This is the third in a series of articles on merchandise sidelines suitable for handling by appliance dealers. The first, Pots and Pans Draw Appliance Prospects, appeared in November, 1950, and the second, Greeting Cards Pay the Rent, was published in December, 1950.

The Market. There for the Taking

Estimates as to the number of power mowers in actual use show wide variation, but a majority of spokesmen are agreed in their feeling that the present market is probably no more than 10 to 15 percent saturated at most.

The Philadelphia *Bulletin* in a recent survey sampling the demands of greater Philadelphia discovered that some 80 percent of the suburban families in that area alone had lawns. Of this total 71.2 percent owned a lawnmower, 94.8 percent of these were hand mowers and only 6.6 percent were power units, an indication of the vast national market existing for this latecomer to popularity in the ranks of home labor saving devices.

Why then the hesitancy on the part of the appliance dealer to include power mowers in his line? In 1949 ELECTRICAL MERCHANDISING, in a survey conducted among 1,739 appliance dealers in 48 states, found that only 37.16 percent handled mowers as part of their stock in trade. Most of the larger manufacturers in the field offer discounts of approximately 25 percent, with additional allowances for quantity purchases. While this is short in comparison to appliance discounts, it is nevertheless well for the dealer to consider the self selling characteristics of the power mower during its annual summer appearance.

Power mowers, unlike the variety of other appliances on the home scene, are almost exclusively a man's machine. This popular appeal for the average male probably stems from a man's interest in anything mechanical, plus the fact that traditionally he has been saddled with the weekly grass cutting task. In decisions affecting the purchase of most home appliances, the woman's voice is an important factor to consider. With the power mower it is a different story. A man who owns even a small lawn area and who has an income of $3,750 a year, or more, may consider the power mower a necessity rather than a luxury.

That the lawn area necessary to the support of a power mower need not be large is amply illustrated by a study conducted by Toro Manufacturing Co. in the autumn of 1950. Among the owners who responded, 73 percent had a half acre or less of lawn area to care for, an illustration of the fact that power mowers are no longer the exclusive pet of the country club. As Sam Briggs, sales manager of Reo Motor's Lawn Mower Division recently put it, "Power mowers have become a part of our way of living. And the market hasn't even been tapped."

The Mower's Family Tree

For the dealer planning the addition of a line of power mowers to his present stock, a certain amount of historical background material is necessary in order that he may know the failings and good points of the product. The original means of cutting grass, a series of rotating blades mounted and turning on a central shaft, appears to have originated in England sometime in the early part of the nineteenth century. This simple mechanism has not changed to any great extent since its inception, and today remains the basic design around which the majority of power mowers are built. Lightweight alloys have been incorporated in various parts of the motor, housing, and structural portions of the modern product, but the cutting mechanism still remains much the same as when first conceived 120 years ago. This is the reel type mower and the type which the average buyer will first turn to when considering purchase. In doing so he has chosen the type which has been generally favored for use on a well graded lawn.

He is, however, overlooking the potential of the newer, rotary types. According to some spokesmen, the reel type mower possesses one bad feature: it will not cut with any degree of accuracy when rank grass growth of more than average height is encountered. Various methods were tried throughout the years to correct this failing, but not until 1935 did an inventive individual hit upon the idea of a mower which presented a blade rotating parallel to the ground. Thus the rotary mower came into being and by undercutting grass in the same manner as a scythe, it manages, according to the industry, to do a job not only on fine lawns, but on long stemmed growth as well. In addition, it is also claimed that the rotary will shred grass cuttings to a fine mulch before redistributing them onto a lawn.

Indications are that the rotary now

PRICES START AT $52.95

LEAST EXPENSIVE power mower on the market is the electrically powered rotary mower made by the Huffman Mfg. Co. to retail for $52.95.

JUST UNDER $100, the Roberton mower made by King Pneumatic Tool Co., Chicago, cuts a 20-inch swath, is powered by a 9/10 hp Briggs & Stratton engine.

accounts for some 25 percent of annual power mower sales in the nation. Cumulative dollar sales of the top twenty manufacturers showed an increase of almost 135 percent for the rotaries when final sales tallies for 1950 were compared with 1949. Reel type power mowers could almost of an increase of 60 percent during the same period. This popularity of the rotary should continue to follow an upward trend in future, though it is doubtful that the older and better known reel types will ever completely topple from the commanding spot which they have enjoyed for so many years.

The least known of all power mower types on the market today is the so-called sickle bar. It too follows the scythe principle of cutting grass, but since it is intended primarily for very heavy duty operations, it is not generally in demand by the average buyer.

The Buyer's Interests

The inroads which power mowers have made into the sales of manually operated machines are evident from the figures of the top 20 manufacturers in 1950. During this period yearly net dollar sales of hand mowers had risen perhaps 12 percent over 1949. *Power mowers of the two most popular types (reel and rotary) had registered a stupping increase of almost 70 percent.* This rising tide of public acceptance has stemmed partially from higher labor costs which have made employment of the yard boy the exception rather than the rule. In addition, it is evident that the public has become sufficiently educated to appreciate the labor saving possibilities inherent in the power mower. This approval has been fostered by the manufacturers themselves, a factor which has helped immeasurably to make the dealer's selling job easier.

Blade Size Important

In selecting their power mower, regardless of the type chosen, the average buyer will register an initial interest in the cutting size of the blade. Toro Manufacturing, in their survey, discovered that among 38.6 percent of a selected number of purchasers of their product the following blade size preferences prevailed.

Size of Blade	Percentage Owning
16"	9.59
17"	16.84
18"	18.91
19"	1.04
20"	4.14
21"	44.30
22"	2.07
24" 30" 31"	3.11
	100.0

With slight variations brought about by climatic necessity and regional preference it is a safe assumption that the sizes shown follow a more or less national pattern. The larger cutting edges would of course be most popular in the South and Southwest where grass growth is heavier and faster. To realize the full sales possibilities of the power mower the dealer must consider carefully the types most suited to his particular locale. A majority of suburban areas will call for smaller, lighter units, while more rural neighborhoods will of necessity be prime targets for larger, more powerful machines. Customers will as a rule show the most interest in the smaller units, but should be cautioned against restricting themselves too greatly. An

(Continued on next page)

AUTOMATIC REWIND starter is outstanding sales feature on Reo's Royale De Luxe, a 21-inch mower with a 1¾ hp engine and retailing for $124.50.

GASOLINE powered rotary made by Pioneer Gen-E-Motor Corp. features molded aluminum frame, low weight (70 lbs.) and price of $109.50.

A PARTIAL LISTING OF MANUFACTURERS OF POWER DRIVEN LAWN MOWERS

Cooper Manufacturing Co.
411 First Avenue
Marshalltown, Iowa

Davis Corp., G. W.
Richmond, Indiana

Eclipse Lawn Mower Co.
Prophetstown, Illinois

Fairbanks Morse and Co.
600 S. Michigan Avenue
Chicago 5, Illinois

Falls Products, Inc.
Geneva, Illinois

Heineke and Co.
1900 South Eighth Street
Springfield, Illinois

Huffman Manufacturing Co.
117 Gilbert Avenue
Dayton 1, Ohio

Jacobsen Manufacturing Co.
742 West Washington Street
Racine, Wisconsin

Johnson Lawn Mower Corp.
Ottumwa, Iowa

King Pneumatic Tool Co.
Chicago, Illinois

Moto-Mower Co.
4624 Woodward Avenue
Detroit, Michigan

Pennsylvania Lawn Mower Works
American Chain and Cable Co.
Camden, New Jersey

Pioneer Gen-E-Motor Corp.
Pincor Products
5841 West Dickens Ave.
Chicago 39, Illinois

Reo Motors, Inc.
Lawn Mower Division
Lansing 20, Michigan

King Pneumatic Tool Co.,
Roberton Div.
27217 N. Ashland Avenue
Chicago, Illinois

Sensation Mower, Inc.
Ralston, Nebraska

Savage Arms Corp.
Lawn Mower Division
Chicopee Falls, Mass.

Toro Manufacturing Corp.
3042 Snelling
Minneapolis, Minn.

Western Tool and Stamping Co.
Des Moines, Iowa

Worthington Mower Co.
Stroudsburg, Pa.

Yard Man, Inc.
Jackson, Michigan

HOW BIG A YARD HAS THE POWER MOWER OWNER?

Overall Size of Areas Mowed by

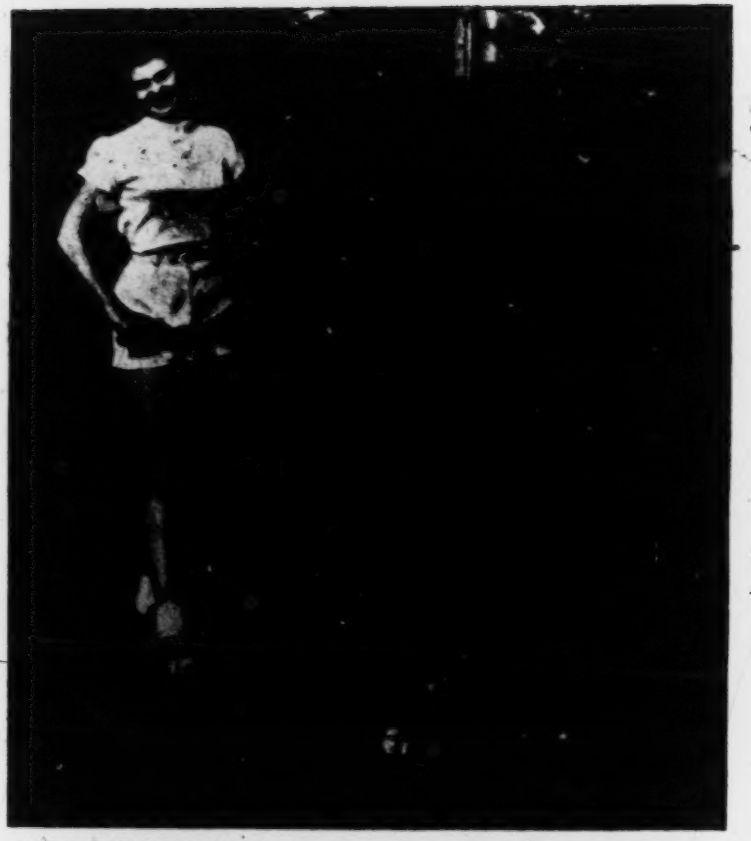

ROTARY MOWERS, like this Toro Manufacturing Company model, cut long or short grass, are growing in popularity.

MANY TYPES OF MOWERS DO ALL KINDS OF JOBS

CUT IN ON THE POWER MOWER

oversmall model for a specific job will not wear as long, or as well, as a larger one, and this should be thoroughly explained to the buyer.

The Price Remains Low

Among appliances, power mowers alone appear to be one of the few items on sale in today's market which have resisted the trend towards higher prices. The smaller and most popular types, with cutting blades of from 18 to 21 inches, have not increased appre-

Dealers should plan to meet the varying demands of the public by stocking at least two or three models in several different lines. In addition, they should have an adequate inventory to accommodate the brisk trade that this May to August business invariably brings. They should remember, too, that the prospective purchaser of a power mower is a remarkably good credit risk, partly because of the responsibility which home ownership engenders, and more particularly be-

Chicago, Illinois

Moto-Mower Co.
4624 Woodward Avenue
Detroit, Michigan

Worthington Mower Co.
Stroudsburg, Pa.

Yard Man, Inc.
Jackson, Michigan

HOW BIG A YARD HAS THE POWER MOWER OWNER?

Overall Size of Areas Mowed by 195 Buyers of Power Mowers*

Approximate Total Area in Square Feet	Approximate Acreage	Percent of Total
1,000 to 5,715	1/8	6.1
6,000 to 7,900	1/6	11.2
8,000 to 9,750	1/5	13.1
10,000 to 11,900	1/4	9.8
12,000 to 13,500	3/10	5.6
14,000 to 15,400	1/3	11.2
16,000 to 17,600	2/5	3.3
18,000 to 19,000	2/5	1.9
20,000 to 22,900	1/2	10.8
24,000 to 26,970	3/5	1.9
28,000 to 30,550	7/10	4.7
32,000 to 33,750	3/4	2.3
26,000 to 39,000	9/10	.9
40,000 to 43,870	1	6.5
44,000 to 47,500	1 1/10	1.4
48,000 to 90,000	2	6.5
Over 100,000	2 1/3 acres or more	2.8
		100 Percent

* Survey figures courtesy Toro Mfg. Co.

oversmall model for a specific job will not wear as long, or as well, as a larger one, and this should be thoroughly explained to the buyer.

The Price Remains Low

Among appliances, power mowers alone appear to be one of the few items on sale in today's market which have resisted the trend towards higher prices. The smaller and most popular types, with cutting blades of from 18 to 21 inches, have not increased appreciably in cost over 1942's average figure. Thus a representative power mower was readily obtainable last year for $99.50, and this year's prices have not risen sharply above this figure. Some machines are on the market at present selling for $79.50, and one enterprising concern manufactures an electrically powered rotary retailing for $52.95. Industry spokesmen are understandably reluctant in the face of rising prices to discuss just how long they will be able to hold the price line. Most, however, are agreed that the cost of small, gasoline engines will be one of the decisive factors. Generally speaking, the heaviest consumer demand falls upon those power mowers which are priced slightly above $100. One of the larger distributors in the New York area has pinpointed this even further with the statement that 80 percent of his calls are for machines which will be placed on the market at prices ranging from $110 to $130, a figure which appears to rank closely with that prevailing throughout the rest of the country.

Dealers should plan to meet the varying demands of the public by stocking at least two or three models in several different lines. In addition, they should have an adequate inventory to accommodate the brisk trade that this May to August business invariably brings. They should remember, too, that the prospective purchaser of a power mower is a remarkably good credit risk, partly because of the responsibility which home ownership engenders, and more particularly because of his higher than average income. Toro's survey brought forth the fact that 94.5 percent of all buyers of their product were home owners.

Repairs No Problem

While repairs necessary to the continuing good health of the modern power mower are few and far between, an adequate and varied stock of replacement parts is a prime requisite. The dealer should not construe this as meaning that the addition of a line of power mowers will bring with it a large bag of repair problems, and the attendant loss of customer good will. Most name brands will give many years of trouble free service to their buyers, and happily those few repairs that will arise with even the best of products are easily handled by dealers whose facilities include even small shops devoted to refrigerator and washer upkeep.

In keeping with most other appliances, the dealer who knows his mower and is able to deliver a convincing sales talk on the merits of the

BOOM (continued)

product will find the battle half won. In their survey, it is found that direct or indirect influence of the dealer motivated final purchase in *almost 54 percent of all sales*. Influence of brand held the next bracket, and the balance of replies included such reasons as buying for comfort and convenience.

Of necessity the dealer must arrange to have the power mower displayed in a sufficiently large space so that the prospective customer may move the unit around, and generally take the measure of the machine in which he is interested. Those dealers fortunate enough to possess a small lawn space adjoining their place of business will immediately recognize the possibilities of a "live" display, during which the mower may be started and handled by the prospect, a sales technique which invariably leads to the conclusion of a sale.

It's Up to You

For a fifty three year period power mowers have been known and marketed in the United States. During the greater part of this long span of years they enjoyed the relative seclusion of the large estate, the country club and the cemetery. Those few hardy souls who were interested approached purchase with extreme reluctance. 1942 saw the first great sales spurt, and while no mowers were constructed during the war years, and few in 1945, the public remembered when the war was over. Sales have risen steadily since 1946. And they will continue to rise. *End*

HEAVY-DUTY mower, designed, as the name implies, for park-like areas, is made by Eclipse.

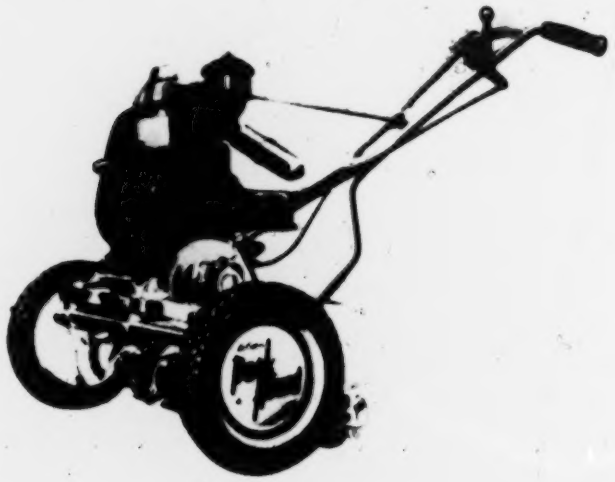

ELECTRIC, reel-type mower made by Reo is designed for small lawns, has 18-inch blades.

THIS $37.50 lawn sweeper is a product of Western Tool & Stamping Co.

HEDGE CLIPPERS are not new on the market, but electric models like this $37.50 product of Pioneer Gen-E-Motor make a boring job lots easier.

Using This Issue

ONCE again ELECTRICAL MERCHANDISING brings you its Annual Statistical and Marketing Issue. Months of work and thousands of dollars have gone into its creation. Hundreds of people have cooperated with us to make possible the publication of the statistical material—figures that have long been accepted by the appliance-radio-television industry as the most authoritative to be found anywhere. It is a job that the staff of this magazine takes natural pride in presenting to its readers.

HOWEVER, it is not our intention here to put ourselves on the back; but to try to point out that, properly used, this issue can become an invaluable tool in your business. Statistics by themselves mean little. But when applied to specific day-to-day problems, they become charged with meaning and significance. Knowing how many washers, or refrigerators or TV sets were sold nationally, or what percent of the nation's consumers own them, may seem academic to Joe Zilch, who just lost a sale to a cut price artist down the street and who has a payroll to meet the next day. But those same figures broken down to his local market can tell him at a glance the sales trend and the sales potential for a particular appliance. National market and sales statistics, in the end, are no more than the collective figures for thousands of local markets. And every time a local dealer's cash register rings up a sale, it becomes a measurable statistic with numerous implications. It means a customer was wooed away from spending his money elsewhere, it means another unit of public acceptance of our products, it means another notch in the "saturation", or ownership factor of that device, it means a customer removed from the market for a period of years, it means in the case of a radio or TV set, another unit added to the listening or viewing audience, or, in the case of a washer, another customer lost to the commercial laundry. It means a fractional increase in the utility's residential load, it means continued employment and income for the men and women who build the product. It also means a statistical notch in the profit of the manufacturer, the distributor and the dealer.

While a sale, therefore, is a dry statistic it carries with it profound economic implications. And in measuring the progress of these isolated sales in every corner of the country, we not only arrive at totals of a staggering magnitude, but are able to assess the progress of an industry and a change in the living habits of a nation.

IN this issue the careful reader is provided with many clues to the effect of sales in our business. He is given an historical record for purposes of comparison year by year, he is given a cumulative index of ownership to point up potentials of specific products, he is given a seasonal index to determine optimum sales periods, he is given breakdowns of sales and ownership by states and by regions within those states. He may ascertain, furthermore, the extent of the replacement market, the percentage of the business involving traded-in merchandise and the eventual disposition of trade-ins, he is provided with background statistics on general business conditions—employment, incomes, savings, installment credit, new home construction, etc. He is furnished a breakdown of the country's wired homes—our basic market—by states and by urban and rural classifications. He can find out sales per thousand customers in any area of the country from data supplied by utilities serving those areas. He can even find out the number of other dealers competing with him in a given area. And, finally, he is informed as to the probable course sales will take in the year ahead.

IN other words, all the necessary information for intelligent sales planning is wrapped up in this package. If you know the extent of your market, know your potential prospects, know the degree of acceptance and present ownership of the products you sell, know what ratio of your sales will require replacing existing or obsolete equipment, know the number of your present customers who can be sold new devices and know when and where appliances generally sell best, you have eliminated a lot of guesswork and provided your business a sound basis on which to operate.

This issue is a tool to use in your business. We hope you find it useful.

Larence Wray

Editor

This editorial written for dealer and distributor readers of last year's Statistical Issue of ELECTRICAL MERCHANDISING, *is just as applicable now. While you are primarily interested in* ELECTRICAL MERCHANDISING *as an advertising medium, we believe it serves to explain why 40% of* ELECTRICAL MERCHANDISING*'s dealer subscribers will still have the January Statistical Issue eight months after it appears.*

INDEX OF SATURATION

January 1, 1956

All figures except radio based on 46,000,000 domestic and farm electric customers. Radio based on 48,158,600 total homes.

Number and Percentage of WIRED HOMES WITH			Number and Percentage of WIRED HOMES WITHOUT	
2,585,000	5.6	AIR CONDITIONERS (room)	43,415,000	94.4
5,351,000	11.6	BED COVERINGS	40,649,000	88.4
2,346,000	5.1	BLENDERS	43,654,000	94.9
5,528,000	12.0	BROILERS	40,472,000	88.0
40,235,000	87.5	CLOCKS	5,765,000	12.5
14,817,500	32.2	COFFEE MAKERS (automatic)	31,182,500	67.8
450,000	1.0	DEHUMIDIFIERS	45,550,000	99.0
1,838,000	4.0	DISHWASHERS	44,162,000	96.0
4,213,000	9.2	DRYERS, CLOTHES (electric and gas)	41,787,000	90.8
2,553,000	5.6	FOOD WASTE DISPOSERS	43,447,000	94.4
7,715,000	16.8	FREEZERS	38,285,000	83.2
11,675,000	25.4	HEATERS, PORTABLE (electric)	34,325,000	74.6
15,639,000	34.0	HEATING PADS	30,361,000	66.0
10,140,000	22.0	HOTPLATES	35,860,000	78.0
4,217,700	9.2	IRONERS	41,782,300	90.8
41,536,500	90.3	IRONS (standard)	4,463,500	9.7
16,655,000	36.2	STEAM IRONS	29,345,000	63.8
17,467,000	38.0	MIXERS	28,533,000	62.0
46,700,000	97.0	**RADIO	1,458,600	3.0
12,965,000	28.2	RANGES	33,035,000	71.8
43,300,000	94.1	REFRIGERATORS	2,700,000	5.9
4,571,000	9.9	ROASTERS	41,429,000	90.1

450,000	1.0	DEHUMIDIFIERS		
1,838,000	4.0	DISHWASHERS	44,162,000	96.0
4,213,000	9.2	*DRYERS, CLOTHES* (electric and gas)	41,787,000	90.8
2,553,000	5.6	FOOD WASTE DISPOSERS	43,447,000	94.4
7,715,000	16.8	FREEZERS	38,285,000	83.2
11,675,000	25.4	HEATERS, PORTABLE (electric)	34,325,000	74.6
15,639,000	34.0	HEATING PADS	30,361,000	66.0
10,140,000	22.0	HOTPLATES	35,860,000	78.0
4,217,700	9.2	IRONERS	41,782,300	90.8
41,536,500	90.3	IRONS (standard)	4,463,500	9.7
16,655,000	36.2	STEAM IRONS	29,345,000	63.8
17,467,000	38.0	MIXERS	28,533,000	62.0
46,700,000	97.0	**RADIO	1,458,600	3.0
12,965,000	28.2	RANGES	33,035,000	71.8
43,300,000	94.1	REFRIGERATORS	2,700,000	5.9
4,571,000	9.9	ROASTERS	41,429,000	90.1
15,410,000	33.5	SANDWICH-WAFFLER (combinations)	30,590,000	66.5
19,834,000	43.1	SHAVERS	26,166,000	56.9
35,000,000	76.1	*TELEVISION	11,000,000	23.9
34,391,000	74.8	TOASTERS	11,609,000	25.2
29,586,000	64.3	VACUUM CLEANERS	16,414,000	35.7
38,700,000	84.1	WASHERS, ELECTRIC	7,300,000	15.9
7,500,000	16.3	WATER HEATERS	38,500,000	83.7

* Bureau of Census, June 1955.

** Projected from Politz Survey, Jan. 1955

10 Year Sales and Retail Value of APPLIANCES, RADIO and TEL

PRODUCT	1946		1947		1948		1949		1950		1951		1952	
	NUMBER SOLD	RETAIL VALUE	NUMBER SOLD	RETAIL VALUE	NUMBER SOLD	RETAIL VALUE	NUMBER SOLD	RETAIL VALUE	NUMBER SOLD	RETAIL VALUE	NUMBER SOLD	RETAIL VALUE	NUMBER SOLD	
Air Conditioners, Room	29,840	$10,298,000	42,900	$17,421,000	73,630	$27,198,000	89,320	$31,473,700	200,900	$62,646,000	237,500	$80,393,000	380,400	$129
Bed Coverings, Electric	200,000	$8,000,000	630,000	26,460,000	675,000	29,025,000	440,000	16,500,000	800,000	31,600,000	776,000	32,980,000	830,000	35
Blankets					215,000	8,170,000	175,000	6,562,500	225,000	8,437,500	290,000	11,455,000	395,000	16
Broilers	800,000	9,800,000	255,000	3,442,500	280,000	5,026,000	260,000	4,667,000	295,000	7,360,000	312,000	7,200,000	434,700	13
Cleaners, Vacuum:														
Floor Type **	2,289,500	155,228,100	3,801,000	285,368,000	3,360,800	257,542,700	2,889,500	221,794,300	3,529,400	280,305,000	2,729,100	234,893,600	2,841,800	260
Hand Type	80,000	1,505,880	186,400	4,827,000	289,900	7,706,400	191,000	5,355,100	230,300	6,614,200	176,000	5,313,500	155,000	4
Clocks	6,500,000	40,950,000	9,729,000	69,076,000	9,995,000	74,962,500	5,280,000	33,200,000	8,100,000	54,000,000	7,500,000	52,125,000	6,700,000	48
Coffee Makers: Total	5,000,000	43,150,000	2,963,000	29,516,000	2,700,000	33,870,000	2,450,000	39,300,000	2,975,000	54,101,250	2,825,000	59,409,750	3,000,000	60
Automatic			200,000	4,000,000	600,000	12,000,000	800,000		900,000	25,155,000	1,695,000	43,646,250	1,950,000	48
Non-Automatic			2,763,000	25,516,000	2,100,000	21,870,000	1,650,000		2,075,000	28,946,250	1,130,000	15,763,500	1,050,000	11
Dehumidifiers							25,000		45,000	6,300,000	55,240	7,678,400	87,450	12
Dishwashers, Motor-Driven			120,000	30,000,000	225,000	61,875,000	160,000	44,000,000	230,000	66,700,000	260,000	78,000,000	175,000	52
Dryers, Clothes, Total			58,000	12,180,000	92,000	20,720,000	105,700	24,317,200	318,500	70,449,400	492,000	120,679,500	634,850	162
Electric			38,000		76,700		84,560		250,980	53,378,400	354,000	82,039,500	473,900	116
Gas			20,000		15,300		21,140		67,520	17,071,000	138,000	38,640,000	160,950	46
Fans:														
Attic			125,000	15,625,000	85,000	11,050,000	76,500	9,562,500	95,000	12,302,500	90,000	12,325,500	95,000	14
Desk and Bracket	1,239,450	13,680,000	3,555,000	65,767,500	3,470,000	60,725,000	2,776,000	51,356,000	2,450,000	42,262,500	2,225,000	43,387,500	1,625,000	36
Hassock or Floor									180,000	7,110,000	185,000	8,136,300	265,000	12
Ventilating, Wall & Ceiling	203,080	2,877,000	265,000	9,142,500	240,000	9,000,000	255,000	9,817,500	495,000	17,745,800	444,500	14,404,300	585,000	19
Window Ventilating											320,000	16,640,000	505,000	27
Portable Roll-Abouts														
Floor Polishers			185,000	9,250,000					240,000	13,800,000	275,000	16,500,000	287,000	18
Food Waste Disposers			100,000	12,500,000	175,000	21,000,000	155,000	20,925,000	320,000	43,200,000	352,000	47,520,000	260,000	33
Freezers, Home	210,300	80,000,000	607,000	200,310,000	690,000	220,800,000	485,000	162,475,000	890,000	289,250,000	1,050,000	378,000,000	1,140,000	421
Fryers, Deep Fat									500,000	12,475,000	725,000	20,662,500	1,525,000	45
Frypan—Skillets														
Heaters, Convector & Radiant:	2,000,000	25,000,000	1,850,000	26,825,000	1,300,000	16,900,000	835,000	9,602,500	1,115,000	15,364,700	930,000	12,393,000	1,202,000	31
Fan-Forced & Fan-Heaters											605,000	9,468,000	690,000	12
Non-Fan Forced											325,000	2,925,000	270,000	2
Wall Type													242,000	16
Heating Pads	2,900,000	17,400,000	2,140,000	13,910,000	1,600,000	10,800,000	1,350,000	9,112,500	1,725,000	11,988,750	1,450,000	10,077,500	1,500,000	10
Hotplates	2,000,000	11,560,000	1,453,000	13,803,500	1,225,000	10,964,000	820,000	6,519,000	1,160,000	9,454,000	940,000	8,695,000	905,000	8
Ironers	175,000	13,146,000	599,300	75,821,800	477,000	71,550,000	307,350	43,028,300	409,200	59,465,900	283,840	49,572,700	211,400	44
Irons: Total	9,600,000	82,959,000	11,004,000	121,215,000	7,360,000	94,392,500	6,310,000	81,639,500	7,475,000	101,188,500	7,585,000	104,166,800	6,235,000	97
Automatic	7,000,000	67,645,000	8,495,000	93,645,000	5,850,000	75,757,500	4,850,000	62,807,500	5,235,000	67,793,250	4,950,000	60,637,500	2,795,000	36
Non-Automatic / Travel	2,600,000	15,314,000	1,353,000	8,118,000	700,000	4,865,000	495,000	3,440,250	595,000	3,867,500	236,400 / 298,600	1,046,900 / 2,687,400	210,000 / 375,000	3
Steam			1,156,000	19,652,000	810,000	13,770,000	965,000	15,391,750	1,645,000	29,527,750	2,100,000	39,795,000	2,855,000	56
Kitchen Cabinets, Steel †	1,347,500	60,000,000	2,790,000	104,600,000	3,236,400	124,776,700	2,132,000	83,852,800	2,969,000	125,848,300	2,672,100	119,930,900	2,970,000	154
Lamp Bulbs & Tubes: Total	1,304,545,000	285,405,000	1,705,044,000	392,077,000	1,837,294,000	406,605,000	1,756,665,000	389,980,000	2,006,880,000	466,400,000	2,012,132,000	518,100,000	1,849,994,000	484
Fluorescent	50,573,000	48,818,000	79,073,000	79,524,000	79,400,000	80,059,000	72,068,000	72,700,000	88,439,000	95,500,000	86,652,000	102,600,000	77,629,000	93
Large Incandescent	726,105,000	149,287,000	831,241,000	174,477,000	845,083,000	179,411,000	814,401,000	173,000,000	933,523,000	204,600,000	950,408,000	228,000,000	920,825,000	222
Photo	43,049,000	7,202,000	78,791,000	13,702,000	143,602,000	24,125,000	155,066,000	26,080,000	229,230,000	37,400,000	295,848,000	51,000,000	341,820,000	58
Miniature (incl. "L")	329,271,000	70,143,000	444,911,000	102,773,000	390,546,000	87,908,000	330,102,000	80,600,000	467,728,000	98,500,000	415,624,000	107,500,000	359,320,000	94
Christmas Tree	155,547,000	9,955,000	271,028,000	21,601,000	378,663,000	35,102,000	385,028,000	37,700,000	287,960,000	30,400,000	263,600,000	29,000,000	150,400,000	16
Lawn Mowers, Power	139,000	17,000,000	362,000	54,000,000	397,000	57,000,000	529,000	65,000,000	1,080,000	100,000,000	1,241,000	121,000,000	1,155,000	110
Mixers, Food:														
Standard	1,500,000	47,265,000	1,220,000	43,310,000	1,550,000	58,105,000	1,375,000	51,562,500	1,700,000	67,150,000	1,475,000	65,687,500	1,375,000	60
Portable					20,000	339,000	150,000	2,542,500	145,000	2,602,750	125,000	2,312,500	455,000	8
Oil Space Heaters †	1,006,200	69,778,200	2,004,200	165,079,970	1,234,900	103,305,100	741,500	60,064 000	886,400	73,480,000	768,490	69,933,000	740,300	68
Radio:														
Home Radios	14,031,000	701,550,000	14,082,700	815,388,300	9,630,300	563,370,600	5,961,200	274,215,200	8,174,600	382,653,000	5,974,300	204,619,800	4,043,100	136
Portable Radios			2,458,300	86,778,000	2,629,600	77,573,200	1,843,400	55,309,800	1,674,700	50,994,600	1,332,990	41,322,700	1,719,900	59
Clock Radios											777,000	30,691,500	1,929,000	65
Ranges	576,700	107,266,200	1,210,000	278,300,000	1,600,000	376,000,000	1,056,000	242,880,000	1,830,000	424,623,000	1,400,000	350,000,000	1,060,000	270
Refrigerators	2,100,000	434,700,000	3,400,000	867,000,000	4,766,000	1,239,160,000	4,450,000	1,134,750,000	6,200,000	1,602,266,000	4,075,000	1,120,625,000	3,570,000	1,017
Roasters	150,000	4,500,000	410,000	15,375,000	675,000	25,312,500	350,000	13,125,000	400,000	15,580,000	442,000	18,541,900	425,000	17
Shavers	2,115,000	35,955,000	2,500,000	43,750,000	1,650,000	32,175,000	1,725,000	37,087,500	2,150,000	50,525,000	2,200,000	53,900,000	2,750,000	68

											38,640,000		160,950	46,675
...ttic			125,000	15,625,000	85,000	11,050,000	76,500	9,562,500	95,000	12,302,500	90,000	12,325,500	95,000	14,250,0
Desk and Bracket	1,239,450	13,680,000	3,555,000	65,767,500	3,470,000	60,725,000	2,776,000	51,356,000	2,450,000	42,262,500	2,225,000	43,387,500	1,625,000	36,031,5
...ancock or Floor									180,000	7,110,000	185,000	8,136,300	265,000	12,852,50
Ventilating, Wall & Ceiling	203,080	2,877,000	265,000	9,142,500	240,000	9,000,000	255,000	9,817,500	495,000	17,745,800	444,500	14,404,300	585,000	19,012,50
...Window Ventilating											320,000	16,640,000	505,000	27,750,0
...Portable Roll-Abouts														
...or Polishers			185,000	9,250,000					240,000	13,800,000	275,000	16,500,000	287,000	18,655,0
...d Waste Disposers			100,000	12,500,000	175,000	21,000,000	155,000	20,925,000	320,000	43,200,000	352,000	47,520,000	260,000	33,800,0
...ssers, Home	210,300	80,000,000	607,000	200,310,000	690,000	220,800,000	485,000	162,475,000	890,000	289,250,000	1,050,000	378,000,000	1,140,000	421,800,0
...ers, Deep Fat									500,000	12,475,000	725,000	20,662,500	1,525,000	45,673,0
...pan—Skillets														
...ters, Convector & Radiant	2,000,000	25,000,000	1,850,000	26,825,000	1,300,000	16,900,000	835,000	9,602,500	1,115,000	15,364,700	930,000	12,393,000	1,202,000	31,203,0
...an-Forced & Fan-Heaters											605,000	9,468,000	690,000	12,075,0
...Non-Fan Forced											325,000	2,925,000	270,000	2,430,0
...Wall Type													242,000	16,698,0
...ating Pads	2,900,000	17,400,000	2,140,000	13,910,000	1,600,000	10,800,000	1,350,000	9,112,500	1,725,000	11,988,750	1,450,000	10,077,500	1,500,000	10,425,0
...tplates	2,000,000	11,560,000	1,453,000	13,803,500	1,225,000	10,964,000	820,000	6,519,000	1,160,000	9,454,000	940,000	8,695,000	905,000	8,597,5
...oners	175,000	13,146,000	599,300	75,821,800	477,000	71,550,000	307,350	43,028,300	409,200	59,465,900	283,840	49,572,700	211,400	44,182,6
...ons: Total	9,600,000	82,959,000	11,004,000	121,215,000	7,360,000	94,392,500	6,310,000	81,639,500	7,475,000	101,188,500	7,585,000	104,166,800	6,235,000	97,384,0
...Automatic	7,000,000	67,645,000	8,495,000	93,645,000	5,850,000	75,757,500	4,850,000	62,807,500	5,235,000	67,793,250	4,950,000	60,637,500	2,795,000	36,195,2
...Non-Automatic	2,600,000	15,314,000	1,353,000	8,118,000	700,000	4,865,000	495,000	3,440,250	595,000	3,867,500	236,400	1,046,900	210,000	875,2
...Travel											298,600	2,687,400	375,000	3,356,2
...steam			1,156,000	19,652,000	810,000	13,770,000	965,000	15,391,750	1,645,000	29,527,750	2,100,000	39,795,000	2,855,000	56,957,2
...itchen Cabinets, Steel †	1,347,500	60,000,000	2,790,000	104,600,000	3,236,400	124,776,700	2,132,000	83,852,800	2,969,000	125,848,300	2,672,100	119,930,900	2,970,000	154,000,0
...mp Bulbs & Tubes: Total	1,304,545,000	285,405,000	1,705,044,000	392,077,000	1,837,294,000	406,605,000	1,756,665,000	389,980,000	2,006,880,000	466,400,000	2,012,132,000	518,100,000	1,849,994,000	484,100,0
...Fluorescent	50,573,000	48,818,000	79,073,000	79,524,000	79,400,000	80,059,000	72,068,000	72,700,000	88,439,000	95,500,000	86,652,000	102,600,000	77,629,000	93,000,0
...Large Incandescent	726,105,000	149,287,000	831,241,000	174,477,000	845,083,000	179,411,000	814,401,000	173,000,000	933,523,000	204,600,000	950,408,000	228,000,000	920,825,000	222,000,0
...Photo	43,049,000	7,202,000	78,791,000	13,702,000	143,602,000	24,125,000	155,066,000	26,080,000	229,230,000	37,400,000	295,848,000	51,000,000	341,820,000	58,200,0
...Miniature (incl. "L")	329,271,000	70,143,000	444,911,000	102,773,000	390,546,000	87,908,000	330,102,000	80,600,000	467,728,000	98,500,000	415,624,000	107,500,000	359,320,000	94,800,0
...Christmas Tree	155,547,000	9,955,000	271,028,000	21,601,000	378,663,000	35,102,000	385,028,000	37,700,000	287,960,000	30,400,000	263,600,000	29,000,000	150,400,000	16,100,0
...wn Mowers, Power	139,000	17,000,000	362,000	54,000,000	397,000	57,000,000	529,000	65,000,000	1,080,000	100,000,000	1,241,000	121,000,000	1,155,000	110,000,0
...xers, Food:														
...Standard	1,500,000	47,265,000	1,220,000	43,310,000	1,550,000	58,105,000	1,375,000	51,562,500	1,700,000	67,150,000	1,475,000	65,687,500	1,375,000	60,500,0
...Portable					20,000	339,000	150,000	2,542,500	145,000	2,602,750	125,000	2,312,500	455,000	8,622,2
...l Space Heaters #	1,006,200	69,778,200	2,004,200	165,079,970	1,234,900	103,305,100	741,500	60,064,000	886,400	73,480,000	768,490	69,933,000	740,300	68,852,0
...dio:														
...Home Radios	14,031,000	701,550,000	14,082,700	815,388,300	9,630,300	563,370,600	5,961,200	274,215,200	8,174,600	382,653,000	5,974,300	204,619,800	4,043,100	136,454,6
...Portable Radios			2,458,300	86,778,000	2,629,600	77,573,200	1,843,400	55,209,800	1,674,700	50,994,600	1,332,990	41,322,700	1,719,900	59,336,5
...Clock Radios											777,000	30,691,500	1,929,000	65,586,0
...nges	576,700	107,266,200	1,210,000	278,300,000	1,600,000	376,000,000	1,056,000	242,880,000	1,830,000	424,623,000	1,400,000	350,000,000	1,060,000	270,300,0
...frigerators	2,100,000	434,700,000	3,400,000	867,000,000	4,766,000	1,239,160,000	4,450,000	1,134,750,000	6,200,000	1,602,266,000	4,075,000	1,120,625,000	3,570,000	1,017,450,0
...asters	150,000	4,500,000	410,000	15,375,000	675,000	25,312,500	350,000	13,125,000	400,000	15,580,000	442,000	18,541,900	425,000	17,850,0
...avers	2,115,000	35,955,000	2,500,000	43,750,000	1,650,000	32,175,000	1,725,000	37,087,500	2,150,000	50,525,000	2,200,000	53,900,000	2,750,000	68,612,5
...levision	6,500	2,100,000	178,570	83,500,000	975,000	383,500,000	3,000,000	970,000,000	7,463,800	2,235,408,000	5,384,800	1,572,362,000	6,096,300	1,719,156,6
...sters: Total	3,500,000	41,489,000	5,019,000	62,015,000	4,850,000	78,315,000	4,200,000	73,290,000	4,525,000	80,142,700	3,725,000	75,763,700	2,975,000	59,727,7
...Automatic	1,400,000	26,138,000	2,840,000	51,120,000	3,650,000	71,175,000	3,450,000	68,827,500	3,795,000	76,127,700	3,350,000	73,532,500	2,650,000	58,167,5
...Non-Automatic	2,100,000	15,351,000	2,179,000	10,895,000	1,200,000	7,140,000	750,000	4,462,500	730,000	4,015,000	375,000	2,231,200	325,000	1,560,2
...ffle Irons—Sand. Grills	3,600,000	45,529,000	3,567,000	50,537,500	3,670,000	53,114,000	1,960,000	30,205,000	2,535,000	42,968,250	1,875,000	33,656,300	1,456,000	29,848,0
...shing Machines:														
...Automatic & Semi-Automatic	356,000	106,800,000	962,000	278,980,000	950,000	272,935,000	928,000	236,640,000	1,646,380	423,119,700	1,589,400	445,667,800	1,684,100	471,076,4
...Wringer & Spinner	1,691,380	140,503,000	2,695,000	262,256,000	3,245,600	453,469,400	2,137,000	288,548,000	2,626,200	361,443,900	1,795,300	269,995,200	1,582,400	237,818,9
...ater Heaters, Storage	488,000	58,560,000	1,100,000	143,000,000	1,040,000	137,800,000	695,000	90,350,000	990,000	131,175,000	845,000	114,075,000	720,000	95,040,0
...ater Systems	625,700	57,083,650	730,000	84,000,000	650,000	89,050,000	600,000	78,900,000	723,000	112,065,000	625,000	96,875,000	682,000	110,484,0

.670,

** Vacuum cleaner figures, include new and manufacturers' reconditioned models for prewar, but from 1946 on represent new models only. † So-called portable metal cabinets not included. # Oil space heaters based on Dept. of Commerce figures. Radio, T-V figures since 1947 represent production, estimated by RETMA. 1952-4 Air Conditioner Unit Figures from A.R.I.

All other figures compiled from reports of associations and manufacturers executives and manufacturers, from "Facts for Industry."

PLIANCES, RADIO and TELEVISION

Manufacturers' Sales Including Exports
In Units and Retail Dollar Value

1950		1951		1952		1953		1954		1955		
ETAIL ALUE	NUMBER SOLD	RETAIL VALUE	NUMBER SOLD	RETAIL VALUE	NUMBER SOLD	RETAIL VALUE	NUMBER SOLD	RETAIL VALUE	NUMBER SOLD	RETAIL VALUE	NUMBER SOLD	RETAIL VALUE	PRODUCT
4,700	200,900	$62,646,000	237,500	$80,393,000	380,400	$129,703,000	1,044,700	349,514,000	1,230,000	$419,298,000	1,290,000	$412,800,000	Air Conditioners, Room
00,000	800,000	31,600,000	776,000	32,980,000	830,000	35,275,000	948,000	35,976,000	1,050,000	37,747,500	1,350,000	40,500,000	Rod Coverings, Electric
2,500	225,000	8,437,500	290,000	11,455,000	395,000	16,392,500	310,000	12,384,500	296,000	11,825,000	405,000	14,415,000	Blankets
7,000	295,000	7,360,000	312,000	7,200,000	434,700	13,172,100	1,130,000	56,333,000	1,550,000	75,950,000	1,545,000	77,172,700	Broilers
													Clippers, Vacuum:
4,300	3,529,400	280,305,000	2,729,100	234,893,600	2,841,800	260,081,500	2,777,700	263,121,700	2,658,100	254,459,900	3,330,000	292,806,900	Floor Type **
5,100	230,300	6,614,200	176,000	5,313,500	155,000	4,786,800	173,200	5,212,100	133,600	4,145,600	110,000	3,426,500	Hand Type
00,000	8,100,000	54,000,000	7,500,000	52,125,000	6,700,000	48,575,000	7,625,000	52,993,700	6,900,000	47,955,000	7,200,000	50,040,000	Clocks
00,000	2,975,000	54,101,250	2,825,000	59,409,750	3,000,000	60,185,500	3,685,000	73,515,800	3,450,000	68,674,500	3,675,000	71,662,500	Coffee Makers: Total
	900,000	25,155,000	1,695,000	43,646,250	1,950,000	48,652,500	.....	.....	3,450,000	68,674,500	3,675,000	71,662,500	Automatic
	2,075,000	28,946,250	1,130,000	15,763,500	1,050,000	11,533,000	.....	.....	.....	.....	.....	.....	Non-Automatic
	45,000	6,300,000	55,240	7,678,400	87,450	12,505,300	90,550	12,224,000	76,000	10,260,000	92,000	11,914,000	Dehumidifiers
00,000	230,000	66,700,000	260,000	78,000,000	175,000	52,500,000	180,000	54,000,000	215,000	64,500,000	295,000	90,270,000	Dishwashers, Motor-Driven
7,200	318,500	70,449,400	492,000	120,679,500	634,850	162,781,000	736,700	179,847,000	940,900	215,630,500	1,450,500	319,197,600	Dryers, Clothes, Total
	250,980	53,378,400	354,000	82,039,500	473,900	116,105,500	568,500	134,342,200	697,700	153,040,500	1,085,500	228,356,600	Electric
	67,520	17,071,000	138,000	38,640,000	160,950	46,675,500	168,200	45,504,800	243,200	62,590,000	365,000	90,841,000	Gas
													Fans:
2,500	95,000	12,302,500	90,000	12,325,500	95,000	14,250,000	135,000	18,562,500	125,000	16,375,000	140,000	17,500,000	Attic
6,000	2,450,000	42,262,500	2,225,000	43,387,500	1,625,000	36,031,500	3,035,000	74,357,700	3,825,000	94,286,000	2,525,000	50,373,000	Desk and Bracket
	180,000	7,110,000	185,000	8,136,300	265,000	12,852,500	335,000	16,029,700	360,000	17,100,000	220,000	10,670,000	Bracket or Floor
7,500	495,000	17,745,800	444,500	14,404,300	585,000	19,012,500	754,000	26,390,000	825,000	30,937,500	860,000	30,100,000	Ventilating, Wall & Ceiling
	.....	.....	320,000	16,640,000	505,000	27,750,000	845,000	52,939,000	1,425,000	79,643,000	1,645,000	82,168,000	Window Ventilating
	.....	.....	.....	.....	.....	.....	110,000	8,250,000	175,000	12,775,000	165,000	12,787,000	Portable Roll-About
	240,000	13,800,000	275,000	16,500,000	287,000	18,655,000	295,000	19,175,000	325,000	19,500,000	375,000	20,250,000	Floor Polishers
5,000	320,000	43,200,000	352,000	47,520,000	260,000	33,800,000	325,000	.....	400,000	47,980,000	520,000	62,374,000	Food Waste Disposers
5,000	890,000	289,250,000	1,050,000	378,000,000	1,140,000	421,800,000	1,090,000	436,000,000	990,000	391,425,000	1,100,000	439,945,000	Freezers, Home
	500,000	12,475,000	725,000	20,662,500	1,525,000	45,673,000	2,650,000	79,500,000	1,995,000	43,690,500	2,275,000	39,812,500	Fryers, Deep Fat
	.....	.....	.....	.....	.....	.....	.....	.....	1,100,000	26,400,000	2,660,000	50,540,000	Fryers—Skillets
2,500	1,115,000	15,364,700	930,000	12,393,000	1,202,000	31,203,000	1,400,000	33,905,300	1,330,000	34,232,500	1,535,000	45,146,000	Heaters, Convector & Radiant:
	.....	.....	605,000	9,468,000	690,000	12,075,000	940,000	17,390,000	850,000	16,787,500	820,000	15,990,000	Fan-Forced & Fan-Heaters
	.....	.....	325,000	2,925,000	270,000	2,430,000	195,000	1,940,300	*180,000	*2,475,000	*185,000	*2,682,500	Non-Fan Forced
	.....	.....	.....	.....	242,000	16,698,000	265,000	14,575,000	300,000	14,970,000	530,000	26,473,500	Wall Type
2,500	1,725,000	11,988,750	1,450,000	10,077,500	1,500,000	10,425,000	1,875,000	12,281,200	1,675,000	10,887,500	1,920,000	11,808,000	Heating Pads
9,000	1,160,000	9,454,000	940,000	8,695,000	905,000	8,597,500	695,000	5,907,500	710,000	5,928,500	720,000	5,580,000	Humidifiers
8,300	409,200	59,465,900	283,840	49,572,700	211,400	44,182,600	160,000	34,013,000	89,840	18,291,000	88,630	18,674,300	Ironers
9,500	7,475,000	101,188,500	7,585,000	104,166,800	6,235,000	97,384,000	7,575,000	118,577,000	6,583,300	95,062,300	8,028,000	114,798,800	Ironers Total
7,500	5,235,000	67,793,250	4,950,000	60,637,500	2,795,000	36,195,250	2,720,000	32,640,000	2,215,000	22,748,000	2,520,000	25,830,000	Automatic
			236,400	1,046,900	210,000	875,250	175,000	691,000	118,300	431,800	113,000	446,300	Non-Automatic
0,250	595,000	3,867,500	298,600	2,687,400	375,000	3,356,250	430,000	4,708,500	400,000	4,700,000	295,000	3,097,500	Travel
1,750	1,645,000	29,527,750	2,100,000	39,795,000	2,855,000	56,957,250	4,250,000	80,537,500	3,850,000	67,182,500	5,100,000	85,425,000	Steam
2,800	2,969,000	125,848,300	2,672,100	119,930,900	2,970,000	154,000,000	3,441,000	178,000,000	3,372,000	174,440,000	4,046,000	209,328,000	Kitchen Cabinets, Steel †
0,000	2,006,880,000	466,400,000	2,012,132,000	518,100,000	1,849,994,000	484,100,000	2,201,159,000	613,500,000	2,244,068,000	641,700,000	2,450,700,000	751,500,000	Lamp Bulbs & Tubes: Total
0,000	88,439,000	95,500,000	86,652,000	102,600,000	77,629,000	93,000,000	84,665,000	121,000,000	86,168,000	131,000,000	95,700,000	152,000,000	Fluorescent
0,000	933,523,000	204,600,000	950,408,000	228,000,000	920,825,000	222,000,000	976,461,000	264,000,000	1,003,600,000	286,000,000	1,025,000,000	330,000,000	Large Incandescent
0,000	229,230,000	37,400,000	295,848,000	51,000,000	341,820,000	58,200,000	485,670,000	83,200,000	454,000,000	73,500,000	500,000,000	78,000,000	Flash
0,000	467,728,000	98,500,000	415,624,000	107,500,000	359,320,000	94,800,000	427,363,000	120,800,000	377,300,000	118,800,000	470,000,000	156,000,000	Miniature (incl. "L")
0,000	287,960,000	30,400,000	263,600,000	29,000,000	150,400,000	16,100,000	227,000,000	24,500,000	323,000,000	32,400,000	360,000,000	35,500,000	Christmas Tree
0,000	1,080,000	100,000,000	1,241,000	121,000,000	1,155,000	110,000,000	1,275,000	144,542,000	1,350,000	121,095,000	2,103,100	180,868,800	Lawn Mowers, Power
													Mixers, Food:
2,500	1,700,000	67,150,000	1,475,000	65,687,500	1,375,000	60,500,000	1,270,000	55,880,000	1,315,000	58,188,700	1,615,000	71,464,000	Standard
2,500	145,000	2,602,750	125,000	2,312,500	455,000	8,622,250	615,000	11,654,200	925,000	18,037,500	1,625,000	31,687,500	Portable
4,000	886,400	73,480,000	768,490	69,933,000	740,300	68,852,000	647,800	60,892,700	452,000	43,394,000	410,000	40,180,000	Oil Space Heaters ‡
													Radios:
5,200	8,174,600	382,653,000	5,974,300	204,619,800	4,043,100	136,454,600	4,403,000	138,694,500	3,067,600	88,193,500	3,525,000	101,343,800	Home Radios
9,800	1,674,700	50,994,600	1,332,990	41,322,700	1,719,900	59,336,500	1,741,600	60,712,000	1,333,500	42,472,000	2,050,000	71,647,500	Portable Radios
	.....	.....	777,000	30,691,500	1,929,000	65,586,000	2,041,100	69,397,400	1,874,900	58,121,900	2,225,000	75,538,700	Clock Radios
0,000	1,830,000	424,623,000	1,400,000	350,000,000	1,060,000	270,300,000	1,250,000	318,750,000	1,350,000	353,700,000	1,600,000	420,800,000	Receiver
0,000	6,200,000	1,602,266,000	4,075,000	1,120,625,000	3,570,000	1,017,450,000	3,650,000	1,076,750,000	3,600,000	1,095,865,000	4,025,000	1,267,875,000	Refrigerators
5,000	400,000	15,580,000	442,000	18,541,900	425,000	17,850,000	395,000	17,380,000	350,000	13,982,500	330,000	13,183,500	Ranges
7,500	2,150,000	50,525,000	2,200,000	53,900,000	2,750,000	68,612,500	3,500,000	94,500,000	3,950,000	108,625,000	4,750,000	121,125,000	Shavers

Television

							100,200	45,504,8
,500	95,000	12,302,500	90,000	12,325,500	95,000	14,250,000	135,000	18,562,5
,000	2,450,000	42,262,500	2,225,000	43,387,500	1,625,000	36,031,500	3,035,000	74,357,7
	180,000	7,110,000	185,000	8,136,300	265,000	12,852,500	335,000	16,029,7
,500	495,000	17,745,800	444,500	14,404,300	585,000	19,012,500	754,000	26,390,0
			320,000	16,640,000	505,000	27,750,000	845,000	32,939,0
							110,000	8,250,0
	240,000	13,800,000	275,000	16,500,000	287,000	18,655,000	295,000	19,175,0
,000	320,000	43,200,000	352,000	47,520,000	260,000	33,800,000	325,000	
,000	890,000	289,250,000	1,050,000	378,000,000	1,140,000	421,800,000	1,090,000	436,000,0
	500,000	12,475,000	725,000	20,662,500	1,525,000	45,673,000	2,650,000	79,500,0
,500	1,115,000	15,364,700	930,000	12,393,000	1,202,000	31,203,000	1,400,000	33,905,3
			605,000	9,468,000	690,000	12,075,000	940,000	17,390,0
			325,000	2,925,000	270,000	2,430,000	195,000	1,940,3
					242,000	16,698,000	265,000	14,575,0
,500	1,725,000	11,988,750	1,450,000	10,077,500	1,500,000	10,425,000	1,875,000	12,281,2
,000	1,160,000	9,454,000	940,000	8,695,000	905,000	8,597,500	695,000	5,907,5
,300	409,200	59,465,900	283,840	49,572,700	211,400	44,182,600	160,000	34,013,0
,500	7,475,000	101,188,500	7,585,000	104,166,800	6,235,000	97,384,000	7,575,000	118,577,0
,500	5,235,000	67,793,250	4,950,000	60,637,500	2,795,000	36,196,250	2,720,000	32,640,0
			236,400	1,046,900	210,000	875,250	175,000	691,0
,250	595,000	3,867,500	298,600	2,687,400	375,000	3,356,250	430,000	4,708,1
,750	1,645,000	29,527,750	2,100,000	39,795,000	2,855,000	56,957,250	4,250,000	80,537,5
,800	2,969,000	125,848,300	2,672,100	119,930,900	2,970,000	154,000,000	3,441,000	178,000,0
,000	2,006,880,000	466,400,000	2,012,132,000	518,100,000	1,849,994,000	484,100,000	2,201,159,000	613,500,0
,000	88,439,000	95,500,000	86,652,000	102,600,000	77,629,000	90,000,000	84,665,000	121,000,0
,000	933,523,000	204,600,000	950,408,000	228,000,000	920,825,000	222,000,000	976,461,000	264,000,0
,000	229,230,000	37,400,000	295,848,000	51,000,000	341,820,000	58,200,000	485,670,000	83,200,0
,000	467,728,000	98,500,000	415,624,000	107,500,000	359,320,000	94,800,000	427,363,000	120,000,0
,000	287,960,000	30,400,000	263,680,000	29,000,000	150,400,000	16,100,000	227,000,000	24,500,0
,000	1,080,000	100,000,000	1,241,000	121,000,000	1,155,000	110,000,000	1,275,000	144,542,0
,500	1,700,000	67,150,000	1,475,000	65,687,500	1,375,000	60,500,000	1,270,000	55,880,0
,500	145,000	2,602,750	125,000	2,312,500	455,000	8,622,250	615,000	11,654,2
4 000	886,400	73,480,000	768,490	69,933,000	740,300	68,852,000	647,800	60,892,7
,200	8,174,600	382,653,000	5,974,300	204,619,800	4,043,100	136,454,600	4,403,000	138,694,5
,800	1,674,700	50,994,600	1,332,990	41,322,700	1,719,900	59,336,500	1,741,600	60,712,0
			777,000	30,691,500	1,929,000	65,586,000	2,041,100	69,397,4
,000	1,830,000	424,623,000	1,400,000	350,000,000	1,060,000	270,300,000	1,250,000	318,750,0
,000	6,200,000	1,602,266,000	4,075,000	1,120,625,000	3,570,000	1,017,450,000	3,650,000	1,076,750,0
,000	400 000	15,580,000	442,000	18,541,900	425,000	17,850,000	395,000	17,380,0
,500	2,150,000	50,525 000	2,200,000	53,900,000	2,750,000	68,612,500	3,500,000	94,500,0
,000	7,463,800	2,235,408,000	5,384,800	1,572,362,000	6,096,300	1,719,156,600	7,215,800	2,029,434,0
,000	4,525,000	80,142,700	3,725,000	75,763,700	2,975,000	59,727,700	3,170,000	57,721,0
,500	3,795,000	76,127,700	3,350,000	73,532,500	2,650,000	58,167,500	2,825,000	56,358,0
,500	730,000	4,015,000	375,000	2,231,200	325,000	1,560,200	345,000	1,362,0
,000	2,535,000	42,968,250	1,875,000	33,656,300	1,456,000	29,848,000	1,370,000	29,455,0
,000	1,646,380	423,119,700	1,589,400	445,667,800	1,684,100	471,076,400	2,070,800	577,401,0
,000	2,626,200	361,443,900	1,795,300	269,996,200	1,582,400	237,818,900	1,521,400	228,018,0
,000	990,000	131,175,000	845,000	114,075,000	720,000	95,040,000	780,000	102,960,0
,000	723,000	112,065,000	625,000	96,875,000	682,000	110,484,000	702,050	119,000,0

dio, T-V figures since 1947 represent pro- nit Figures from A.B.I.

All other figures compiled from reports of associations and manufacturers, fr om estimates by ou clusive executive and manufacturers, from "Facts for Industry," and Commerce of Manufactures.

45,504,800	243,200	62,590,000	365,000	90,841,000	Gas
					Fans:
18,562,500	125,000	16,375,000	140,000	17,500,000	Attic
74,357,700	3,825,000	94,286,000	2,525,000	50,373,000	Wall and Bracket
16,029,700	360,000	17,100,000	220,000	10,670,000	Circuit or Floor
36,390,000	825,000	30,937,500	860,000	30,100,000	Ventilating, Wall & Ceiling
52,939,000	1,425,000	79,643,000	1,645,000	82,168,000	Window Ventilating
8,250,000	175,000	12,775,000	165,000	12,787,000	Portable Hill-Abouts
19,175,000	325,000	19,500,000	375,000	20,250,000	Floor Polishers
	400,000	47,900,000	520,000	62,374,000	Food Waste Disposers
46,000,000	990,000	391,425,000	1,100,000	439,945,000	Freezers, Home
79,500,000	1,995,000	43,690,500	2,275,000	39,812,500	Fryers, Deep Fat
	1,100,000	26,400,000	2,660,000	50,540,000	Frypan—Skillets
33,905,300	1,330,000	34,232,500	1,535,000	45,146,000	Heaters, Convector & Radiant:
17,390,000	850,000	16,787,500	820,000	15,990,000	Fan-Forced & Fan-Heaters
1,940,300	*180,000	*2,475,000	*185,000	*2,682,500	Non-Fan Forced
4,575,000	300,000	14,970,000	530,000	26,473,500	Wall Type
2,281,200	1,675,000	10,887,500	1,920,000	11,808,000	Heating Pads
5,907,500	710,000	5,928,500	720,000	5,580,000	Hotplates
14,013,000	89,860	18,291,000	88,630	18,674,300	Ironers
8,577,000	6,583,300	95,062,300	8,028,000	114,798,800	Irons: Total
2,640,000	2,215,000	22,748,000	2,520,000	25,830,000	Automatic
691,000	118,300	631,800	113,000	446,300	Non-Automatic
4,708,500	400,000	4,700,000	295,000	3,097,500	Travel
0,537,500	3,850,000	67,182,500	5,100,000	85,425,000	Steam
8,000,000	3,372,000	174,440,000	4,046,000	209,328,000	Kitchens Cabinets, Steel †
3,500,000	2,244,068,000	641,700,000	2,450,700,000	751,500,000	Lamps Bulbs & Tubes: Total
1,000,000	86,168,000	131,000,000	95,700,000	152,000,000	Fluorescent
4,000,000	1,003,600,000	286,000,000	1,025,000,000	330,000,000	Lamp Replacement
3,200,000	454,000,000	73,500,000	500,000,000	78,000,000	Flash
0,000,000	377,200,000	118,800,000	470,000,000	156,000,000	Miniature (incl. "G")
3,500,000	323,000,000	32,400,000	360,000,000	35,500,000	Christmas Tree
3,542,000	1,350,000	121,095,000	2,103,100	100,868,000	Lawn Mowers, Power
5,880,000	1,315,000	58,188,700	1,615,000	71,464,000	Mixers, Food:
1,654,200	925,000	18,037,500	1,625,000	31,687,500	Standard
					Portable
0,892,700	452,000	43,394,000	410,000	40,180,000	Oil Space Heaters #
4,694,500	3,067,600	88,193,500	3,525,000	101,343,800	Radios
2,712,000	1,333,500	42,472,000	2,050,000	71,647,500	Home Radios
3,397,400	1,874,900	58,121,900	2,225,000	75,538,700	Portable Radios
1,750,000	1,350,000	353,700,000	1,600,000	420,800,000	Clock Radios
1,750,000	3,600,000	1,095,865,000	4,025,000	1,267,875,000	Ranges
3,880,000	350,000	13,982,500	330,000	13,183,500	Refrigerators
					Washers
1,800,000	3,950,000	108,625,000	4,750,000	121,125,000	Shavers
7,436,000	7,346,700	1,689,741,000	7,905,000	1,833,960,000	Televisions
3,721,500	3,110,000	52,226,600	3,350,000	56,318,000	Receivers: Total
3,358,800	2,690,000	50,975,000	3,035,000	55,388,000	Automatic
1,362,700	420,000	1,251,600	315,000	930,000	Non-Automatic
1,455,000	928,000	17,354,000	995,000	18,905,000	Waffle Irons—Grids, Grills
					Washing Machines:
7,401,100	2,401,000	653,816,300	3,187,000	856,793,100	Automatic & Semi-Automatic
1,018,200	1,209,400	179,741,000	1,200,400	175,654,500	Wringer & Spinner
1,960,000	800,000	101,337,500	900,000	107,955,000	Water Heaters, Storage
1,000,000	728,000	123,600,000	788,000	130,000,000	Water Softeners

Lamps and Bulbs do not include exports. * 1964-5 non-fan heaters include glow radiant portable.

Permission to reprint, or use in general provided credit is given ELECTRICAL MERCHANDISING.

Page of Transcript

Q. And have the sales of the VS 700 series been comparable since that time with the figures you have just mentioned?

A. We are producing substantial quantities of the VS 700 series engines.

Q. Let's take the period including 1952, '53, and '54, could you give us a general idea as to the probable number of vertical shaft 700 series engines manufactured and sold by Clinton during that period.

252 A. The total for that period would be nearly a half a million units.

The relation between the horizontal shaft 700 series engine and the vertical shaft 700 series engine as it was introduced in 1949, was that the first VS 700 series engine was fashioned from the majority of the parts of the horizontal 700 series engine for the R.P.M. Manufacturing Company, then located in Lamar, Missouri, and who were at that time a supplier for Sears Roebuck and Company. There were internal changes within the engine necessary to accomplish the vertical shaft application
253 which basically dealt with the lubrication system. The main castings were substantially the same, or were the same with the exception of minor drilling deviation. In
255 adapting that main casting for use in a vertical shaft engine, the cover Exhibit D-105 was a substitute for one of the bases that were used on the horizontal series 700 engine.

257 I am familiar with the two-cycle engine manufactured and sold by Clinton, model designation VS 200 series. We introduced that in the latter part of 1952. The reason for our bringing out a VS 200 series engine was for the purpose of supplying to our customers a die-cast low-cost

Page of Transcript

light weight vertical shaft engine and to accommodate the tremendous demand and change taking place in the power lawnmower business. The VS 200 series was a die-cast engine. That engine was produced and sold in substantial quantities in 1952 and 1953, and thereafter. Clinton is still manufacturing and selling that engine. And the quantities of that engine now being sold are very
258 substantial. That engine primarily was used on rotary lawnmowers. Exhibit D-106, being a VS 200 series engine, can be adapted to a power lawnmower deck by the four drilled and tapped mounting holes which are located within a four inch bolt circle. The Exhibit D-107
259 adapter plate is used in conjunction with Exhibit D-106 in this particular fashion, whereby the four mounting holes in the interior of the plate align with the four mounting holes of the Exhibit D-106. It also can be inverted in the opposite fashion by the changing of the muffler and the four center holes aligned with the same four base holes on Exhibit D-106. The adapter plate D-107 has a similar function to the adapter plates that were used in connection with the VS 700 engine. In the normal disposition of the VS 200 engine the adapter plate would be on the bottom with the engine above it.

* * * *

266 *Cross Examination*

* * * *

269 I first learned of the Lauson vertical shaft power head engine probably in 1946 or 1947.

---

272 CLARENCE P. DAMON (RECALLED)

273 *Direct Examination*

Defendant's Exhibit D-10 is the die-cast cylinder block for the light weight engine Clinton VS 100. The block

Page of Transcript

is not complete in that the bronze or steel backed bronze bearing or solid bronze insert that is used in the upper main bearing is not in the block. And it needs to have a portion of the breather baffle assembled. The cylinder in defendant's Exhibit D-10 is formed by a cast-iron cylinder liner cast into the aluminum block. And this cast liner forms the bore of the cylinder in which the
274 piston operates.

Defendant's Exhibit D-111 is the cylinder liner which is used in casting our cylinder — or I should say, it is placed in the die-casting machine to be cast into the aluminum casting. And the surface of this casting, which is identified as D-111, has a rough practically threaded surface with two undercut rings which each serve a function. The rings are to eliminate the possibility of the sleeve becoming loose in the aluminum casting because of the difference in the expansion of the aluminum and the cast-iron, and the rough surface tends to give more heat-dissipating effect to this liner and getting the heat from the liner to the fins for cooling the cylinder. Defendant's Exhibit D-112 is the raw casting of which liner D-111 is made. That is as it comes from the foundry. D-111 and D-112 are close-grained cast-iron.

275 Q. What operation is performed on a liner casting such as Exhibit D-112, to produce a liner such as D-111?

A. Well, after the part is turned over from the foundry to the machine shop there is a turning of the OD and a boring of the ID. By OD I mean outside diameter—giving the grooves and the threaded surface to give the dimensions insuring the thickness of the wall of the cylinder. ID or inside diameter is bored with a certain surface finish specified and a definite tolerance, so that

Page of Transcript

the sleeve, which is identified as D-111, will fit the core in the die-casting die required to complete the cylinder.

All of Clinton's light weight four-cycle engines use a liner such as Exhibit D-111. In order to complete the
276 cylinder and crankcase for the Clinton four-cycle engine you would need in addition to the cylinder liner the bearing inserts, the cover which covers the power take-off side, and the cover which closes the valve spring chamber. And in order to have a functional engine you also need
277 the cylinder head.

Clinton uses an aluminum die-cast piston in their light weight engine. That piston is not plated in any way.

Now, if you were to take a completed Clinton light weight engine and remove the liner therefrom—that is, the cylinder liner, that engine would not be operative with
278 the cylinder liner removed. By removing the liner you would open the bore by the clearance of the wall of the liner and there would be a rough surface and I am sure that would be abrasive on the ring.

Mr. Jones: We will admit that, Your Honor.

Q. Now, is there any reason you know of why Clinton employed a cylinder liner in connection with its die-cast engine?

A. Yes. Our engineering department felt that due to the years of testing carried on by the automobile industry, the small gasoline engine industry, and our own testing of aluminum pistons in cast iron cylinders, that it would be to our advantage to remain with an established practice. I should say, an approved practice.

To my knowledge Clinton has not had any particular trouble in connection with the operation of its engines

Page of Transcript

in the inserted cylinder liner in light weight engines — with the operation of the piston in the cylinder liner. If there was any significant difficulty in that connection it is likely I would have heard about it. In the tests I have
279 performed I would have seen it there; I would have heard about it in some manner.

The Court: I am not sure I heard why the liner is preferable to not using the liner.

A. Your Honor, prior to the building of aluminum die-cast engines Clinton Machine Company built a considerable number of cast-iron engines which in the inside of their block had the same surface touching the pistons as would be simulated by installing a cast-iron cylinder liner as exemplified in D-111, and to meet further competition—and their building and developing engines the majority of them were based on aluminum pistons in cast-iron cylinders. Practically all automobiles as they are manufactured and have been manufactured in the past since the advent of aluminum pistons, use a cast-iron cylinder. There are variations from that, but we figure there is enough evidence through our testing and through things established in the field we were satisfied to do with what was available. The performance of a die-cast
280 piston in a cast-iron cylinder liner, as when used in the light weight engine, is identical with that of a die-cast piston operating in a cast-iron cylinder bore as in the VS 700 engine.

281 I think that a die-cast piston would not operate on a die-cast cylinder. You would have two similar metals, and without the addition of something I am afraid it would be inoperative. A cast-iron cylinder with an aluminum piston would run indefinitely for many hours —

it is hard to tell in the particular engine. But a cast-
282 aluminum piston on an aluminum bore is not practiced and it would not be functional, in my estimation. Now, if the piston were chrome-plated in the case where it runs in the die-cast cylinder bore, that immediately changes the picture. The chrome plating to a piston running in a die-cast aluminum bore would give you an operative cylinder and is practiced in the field today. Now, as to the life of the performance of the chrome-plated piston working in the aluminum cylinder, as compared to the aluminum die-cast piston working in a cast-iron bore, my experience has been, and I think it is substantiated by the practice most widely used, that the aluminum piston in the cast-iron bore is superior.

283 The parts required to complete the cylinder and crankcase D-114 would be a cover plate, closing this opening on the power take-off end, a plate closing the tappet case or valve chamber, a pipe plug in both ends to complete the plugging of the base. And to make it an operative cylinder of course a cylinder head would be—

Q. Now, does this block have a cast-iron cylinder insert as is characteristic of Exhibit D-10?

A. Yes, it does.

Q. Is the same cylinder liner used in that block as used in the block for the vertical shaft engine?

A. No, it is not.

284 This particular block has a longer cast iron liner which can be extended down below the cylinder of the casting. And the purpose of this longer liner was two-fold. We used it for a longer stroke engine. This block has a bearing insert in the upper main bearing for the journal of the crankshaft. And that is already in place.

Page of Transcript

Q. Now, would you point out the the differences if any between the horizontal shaft block Exhibit D-114 and the vertical shaft block D-110?

A. By the looks of the blocks I can tell they come from different dies. And one thing that is required in the vertical shaft is a hole drilled through here, across the end here, going to the top main bearing, which will eliminate—. On defendant's Exhibit D-10, which is the
285 cylinder block used for vertical shaft application there is a cross hole drilled from the exterior of the block across the top section of the block underneath the cam shaft boss and into the crankshaft boss, which offers a supply of oil to the top main bearing and to the rotating parts below. That passage is completely unnecessary in the horizontal block D-114. The addition of mounting feet onto the casting D-114 is required when the engine is used as a horizontal. There are no mounting means on the D-10, which is the vertical shaft block. There is another change in the tappet case itself. There is a small hole drilled in the center close to the breather opening on the horizontal block D-114. The purpose of that hole is to drain oil that comes up through the breather. Drain it back into the crankcase proper. The reason this is in that position on the horizontal is that the lowest point is in the center of the casting in the tappet case, and
286 that is where the hole is drilled. And the vertical shaft, which is in this position with the crankshaft extending vertically with the cylinder horizontal, there is a hole drilled back in the bottom of the tappet case at the lowest point possible to provide a hole through here to allow the oil to drain back in, on this particular application. For draining lubricant from the crankcase, on the feet of defendant's Exhibit D-114 there are two holes that

Page of Transcript

communicate from the outside to the crankcase proper. We drill both and tap both and supply a plug for that purpose. The plug being removed will drain the oil from the crankcase. Now, in Exhibit D-10 for the vertical shaft application there are no provisions for draining the oil in this particular casting. As between the vertical shaft light weight and the horizontal shaft light weight,
287 the camshaft in the vertical shaft Clinton engine is considerably longer than the camshaft in the horizontal Clinton engine. Consequently the cam axle is of a different length than the crankshaft used in the vertical shaft applications. I don't recall any specified for horizontal with the same crankshaft.

* * * *

290 Q. How does that bearing and boss construction compare with the bearing and boss in the cover for the Clinton light weight vertical shaft engine?

291 A. Well, I would say it was the same. Moving over to the left, the cam axle boss is observed. And in this engine, as in our light-weight, the cam axle is stationary and the boss takes only the thrust out.

Q. Well, now, how does the boss from the under side—the lower side of the Clinton VS 700, does the boss for the camshaft compare with the boss for the camshaft in the cover which is used on the Clinton vertical shaft light weight engine?

A. It serves the same purpose and is the same.

Q. The same construction?

A. Well, it is cast-iron and the other is aluminum, but it serves the same purpose to the same end, yes, the boss extending up to take the thrust. And in this particular model we press the cam axle into the cylinder block instead of keying as we do in the light weight.

Page of Transcript

Explaining the function of the bosses in the VS 700 engine or plaintiff's Exhibit 19, first, the camshaft boss
292 on the upper side is a part of the sand casting. That projects down into the crankcase. The crankshaft boss is furnished by a bearing plate that closes this opening. That is a separate bearing plate, and serves the same function as the crankshaft boss and the inserted bearing in the light weight engine.

293 Clinton does not employ the same lubrication system in its vertical shaft light weight engine and in its horizontal shaft light weight engine.

It would not be possible to take an operative Clinton vertical shaft engine and remove the lower cover from the
294 crankcase and replace that cover with a cover for a horizontal shaft engine and wind up with a functional engine. In fact you could not even get it on. If I took a horizontal engine, and an operative machine as Clinton machine sells it, take the cover off the horizontal engine and select a vertical shaft cover and attach it to it would I have an operative engine? No. Cover plate Exhibit
296 D-120 is a standard cover plate used in the Clinton VS100 engine, and the parts of this block, Exhibit D-10, the cam gear, the cam axle, and the pump, are VS 100 parts. And I will proceed to assemble this cover to this block assembly. (The witness assembles parts and indicates) In that fashion. I will remove the plate D-120 and endeavor to substitute plate D-119 which is a cover plate for a horizontal 100 engine. (Witness works with parts) And I have an inoperative structure. (Witness indicates) Now, the converse of this —. One thing I
297 would like to point out before I remove the cover is — the gear did not fall out of place or out of mesh with the crankshaft it is simulating that the camshaft would

Page of Transcript

be in. Removing cover D-119 and replacing it with D-120 which is a vertical shaft cover — (Witness exchanges parts) The cam gear is allowed to fall out of place and down below its meshing point with the crank-
298 shaft, because the cover is not so designed to position it in the proper place.

With regard to the vertical shaft engine alone, that is the light weight vertical shaft, Clinton does manufacture a series of interchangeable plates for the vertical shaft engine alone.

Q. Now, is it the practice of Clinton to—after an engine has been manufactured, to change the cover on an engine—on a vertical shaft engine by replacing it with a different cover?

A. Not to my knowledge. It is not the general practice of the Company, I will put it that way.

299 Identifying Exhibit D-123 as a Briggs' horizontal shaft engine and plaintiff's Exhibit 16-A as a Briggs' vertical shaft engine, I note immediately that these large feet on Exhibit D-123 are minus from Exhibit 16-A of plaintiff, and also that there are two bosses extending from the lower section of the crankcase clear to the opening, that are minus in Exhibit D-123. And I notice an entirely different breather system — breather baffle system, I should say, between the two blocks. (Indicates) And I notice a pocket or a cavity in block 16-A that does not appear at all in cylinder block D-123. The
300 cavity in plaintiff's Exhibit 16-A, close to the crankshaft boss, having a hole communicating between it and the crankshaft bearing and to the outside on the opposite side of the opening is for lubricating the upper main bearing in a vertical shaft application. Due to the nature

Page of Transcript

of the lubrication structure, which is a slinger mechanism. the oil is thrown into that pocket and allowed to flow back in through the hole, which is at an angle to the bearing which journals the crankshaft. And it is entirely missing from the horizontal application, which is D-123. Well, there is a drain pocket in this block identified as D-123, and there is no drain pocket or facility for one in plaintiff's Exhibit 16-A. Well, I think that completes the difference.

Briggs & Stratton does not employ in its light weight engines the same kind of lubrication system in its horizontal shaft engine as it does in its vertical shaft engine. In the vertical shaft application they use a nylon gear which runs in connection with the cam gear and has little paddles on the periphery of the gear and throws the oil through the hole to the pocket I indicated in plaintiff's Exhibit D-16-A. And in the horizontal shaft application they use the conventional dip finger or splash
301 system. That includes a part like Exhibit D-122; that is the Clinton part, but it has the same function. The application for distributing the oil in the horizontal engine of Clinton Machine is basically the same as it is in Briggs & Stratton, they are both splash systems with a finger, the same as the one indicated there and the same as the plaintiff uses on his horizontal light weight engine.

Q. I hand you a copy of the Conover patent No. 2,227,247, which is Exhibit D-99, and ask you if you are familiar with the construction disclosed in that patent.

A. Yes, as of recent.

Q. I would like to direct your attention to figure 17 and 18 of that patent and ask you whether as an engineer

Page of Transcript

or a person skilled in the engine art, if you would have any difficulty in completing the construction of the engine there partially shown.

302 A. The engine partially shown in figures 17 and 18 of defendant's Exhibit D-99 is a two-cycle water-cooled engine. It is not complete from what I see, but the basic components are there. And on reading the patent — in reading the patent I should not say that — I am looking at the drawings of the patent D-99 figures 9 and 10. There are parts there shown that would complete the engine into a functional engine, and I can see no major difficulty.

Q. What are the parts that are shown in figures 9 and 10 that would be required to complete the engine shown in figures 18 and 17?

A. Well, the figures 17 and 18 show the piston, the intake ports, the exhaust ports, the closed crankcase, the connecting rod, the crankshaft, the magneto, the cylinder head, the water jacket, and the numberings thereof, plus a shrouding, which is something extra, which is unnecessary to the engine. But the things that are missing are things such as a cylinder head with a sparkplug attached, and a connection between the sparkplug and the magneto. And then a carburetor and a porting means or valve means for allowing this engine to breath in the combustible mixture. Now, in figure 9 parts identified as 118 would transfer the fuel from the carburetor into the cylinder to be compressed in the crankcase and to be ported up through the transfer passage 119, identified
303 on figure 9, and then passed into the cylinder with the piston in the proper position, which is customary in all two-cycle engines. The fuel mixture would pass through opening 121 and be deflected toward the top of the cyl-

Page of Transcript

inder by the deflector on the top of the piston. Then the piston would come up in the operation, and you have the combustible mixture in the cylinder and the spark-plug to ignite it. And there is the magneto shown here, a flywheel magneto, which is a part of most internal combustion engines that operate with a magneto. It could be operated with a battery and coil, but this particular one is an outboard and it has reference to a magneto, or at least it shows a picture of a magneto flywheel. And to further emphasize its magneto there is an advancing mechanism shown on figure 1 just under the flywheel for advancing and retarding the spark, but by no stretch of the imagination can you say it is to eliminate a magneto assembly.

Figures 17 and 18 disclose a construction for a water-cooled engine.

Q. Would you have any difficulty as an engineer in adapting the construction shown in figures 17 and 18 to an air-cooled engine?

A. No, it is very similar to our VS 200. All we would have to do is take the water jacket away and add cooling
304 fins. In this structure application you would have to have a cylinder head, because of the nature of the casting.

* * * *

Q. Now, with reference to the Clinton block for the light weight vertical shaft engine I show you defendant's
306 Exhibit D-113 and ask you to state whether that block is a single casting.

A. It can't be a single casting when I testified to that other casting, the cast-iron D-111, which is a cast-iron liner, and is cast in an entirely different place and manner than is the rest of the block.

Q. I show you a Clinton horizontal shaft block D-114 and ask you whether that block is a single casting.

A. This block is a single casting? No, not only does it have a cylinder liner—a cast-iron cylinder liner, it has the bearing pushed into it, and valve inserts.

The drawing of Hargreaves' patent No. 2,417,195, which issued March 11, 1947, Exhibit No. D-124, discloses electric motors and it shows in figure 4 a flange
307 mounted means for attaching this motor, and the other for a different means of attaching the motor. The difference between that first embodiment I have described and the one shown in figure 2 of the patent is that there is a different end plate attached to the motor to make it adaptable for a different application.

Q. Is the end plate shown in the figure 2 different than that shown in figure 4?

A. Well, that is in the patent somewhere as I recall but as parts of the invention they are interchangeable.

Mr. Jones: I move to strike that. This witness doesn't know about the interchangeability, all he knows is about the drawing.

Q. Will you describe what the drawing discloses?

A. Well, let me look here for a minute and I — well, by what it indicates I would say that is what it was, one is interchangeable with the other.

Interchangeability of an end plate on a motor is an old expedient so far as I know. When this case came
308 up as far as adapting something to a lot of different applications I recall in 1938 when I was maintenance man of Quaker Oats Company in Tecumseh, Michigan, we frequently had conditions where we had electric motors

Page of Transcript

mounted in one fashion and we removed the end plate and mounted them in another fashion. And to confirm my thinking I dug up an old catalog to see if I was still able to find something to prove substantially the same thing I was saying, that was used in the practice in the electric motor business. I am familiar with the fact that covers or end covers can be removed from electric motors and another end substituted, giving you a different mounting means —

Mr. Jones: There is no dispute about that.

309 *Cross Examination*

310 I know there are engines in the field that employ a chrome plated cylinder wall and aluminum pistons. And I know there are engines in the field that chrome plate the piston and use the aluminum cylinder wall. They are really one and the same in performance or operation.

311 Q. Isn't it a fact, in Clinton providing a liner they are doing the same thing I have just outlined with reference to either chrome plating the piston wall or chrome plating the piston, they are providing two different types of metal, one against the other?

A. My answer to that would be, no. My experience has been that in the chrome plating of cylinder walls that in my experience we have to have special processes to hold the alloy. There is a threaded roughening of the surface such as McCullough used in his engine.

Q. Now, isn't it a fact that taking an insert such as Clinton uses to make its cylinder wall, inserting the liner in the casting, then that becomes an integral casting?

312 A. Yes, it does become an integral casting.

Page of Transcript

Q. So, therefore, the Clinton casting, as represented for example in defendant's Exhibit 113, is an integral casting, is it not?

A. Yes, but it is not a single casting.

I don't see how you can cast a cast-iron liner, which is an entirely separate metal, in one function, and in another place attach aluminum to it and call it one casting. The difference is in the metals, the variation in the metals themselves.

* * * *

315 I first learned of the Lauson Power Head engine as in my affidavit. Some time after the decision of the Court there was talk in Maquoketa in our engine plant, when the court — after defining the expiration as being — I don't know the exact wording of it, but the expiration of the —

* * * *

316 The date I have given to you, after the decision is when I first learned of the Power Head application.

Q. Was it discussed in the plant of the Clinton Machine Company?

A. Was it discussed?

Q. Yes, when you learned of the Power Head.

A. Well, I took it rather lightly first, and then looked at it a little and then started to investigate.

Q. You were probably the first one at Clinton to learn of the Power Head?

A. Yes, I was, because I started asking questions. But don't misconstrue that, there might not have been someone there that was working on the case that could have found it, I couldn't say that.

Page of Transcript

The first Sport King engine I ever saw is the one that is here. That was after the decision.

Q. Now, in the VS 700 engine what closes the power take-off side of the crankcase?

* * * *

317 A. The wall of the crankcase.

Q. Now, would the VS 700 engine have been operative without the adapter plates D-87, D-88, D-89, D-91, D-92? * * * Would it run and operate?

* * * *

The Witness:

319 Now, taking the VS 700 engine, you make no changes in that engine to use it on either one of these adapter plates we have just examined. In other words, you could use it on the D-87. You could use it on the D-81 without change. You could use it on the D-89 without change. You could use it on the D-91 and also the D-92 without making any change in the motor.

320 Q. If you want to have a power take-off on a camshaft on the VS 700 engine, could you do so merely by changing an adapter plate?

A. No.

321 Q. Now, when you changed the plate D-103 to one of the other plates it would have to be mounted on the engine in the same place where D-103 is designed to be mounted. Does that in any way change the character of the engine, its operation as an engine?

A. No, it doesn't change it as far as the operation of the engine is concerned.

Q. Now, going back to plate D-103, let's take for example the Exhibit D-104, or any of the other plates we have been generally discussing, could you by changing

Page of Transcript

any of these plates, convert the engine say into a ball-bearing engine as distinguished from the straight bronze bearing?

A. No, you could not.

Q. And could you, by changing one of these plates change the engine to a power take-off on the camshaft as against one that did not have a power take-off on the camshaft?

A. I would hardly think so when it has nothing to do with the camshaft face.

• • • •

323 Q. No matter what changes you may make in the plate, the bottom D-103 or in the adapter plates D-88, D-89, D-91, D-92, no matter what changes you may make in those adapter plates or in this end cover D-103, or any of them like it, it in no wise changes the engine as to for instance changing it from a plain bearing to a ball bearing or from a normal engine with only a power take-off at the crankshaft to one having a power take-off at the camshaft.

A. Well, I think that is really stretching it quite a ways.

Q. Well, you can't do it?

A. Well, no.

324 These adapter plates fit an entirely different side of the engine than that to which the plate D-103 and those like it are secured. Our horizontal shaft engine and our vertical shaft engine casting here in evidence as Exhibits D-110 and D-114, could not have the plate D-120 and D-119 interchangeably secured thereto.

Mr. Jones: May I ask Mr. Lechtenberg to come here please, and demonstrate for me how he did for me,

Page of Transcript

and see if you agree with him. Now, we will take Exhibit D-114 —

Q. Now, we will put the plate D-120 on the casting D-114 with the camshaft therein. Now, would you say that is correctly assembled?

A. No, because we do not sell horizontal blocks with vertical plates, or vice versa.

Q. Would you say that engine will operate that way?

A. Which way are you going to operate it, horizontally? You have got an engine there that has an oil system for one application and not for the other. It is not operative in that condition.

Q. You saw the movie in court the other morning?

A. Yes.

Q. You saw the engines going down the line and by the mere substitution of the slinger for the splasher would change the lubrication system of the engine.

A. That was not the only change — there was different connecting rods used — a different connecting rod used in the vertical shaft application with the holes providing oil for the crankshaft bearing, and no hole in the horizontal application, and other changes.

* * * *

328 Q. Except for the feet the casting used for the vertical shaft engine and the casting used for the horizontal shaft engine is the same except for machining?

A. With the deletion of part of the casting which are the feet — I would say that the Clinton casting was the same as the vertical shaft casting but that the base castings are not the same.

Q. I am not asking you about the base castings, Mr. Damon, I am concerned only with Clinton. Now, please — I believe he said the Clintons were the same with the horizontal or vertical except for the feet.

A. But the feet are a part of the casting.

Q. • • •Now, isn't it a fact that Clinton has built some four-cycle vertical shaft light weight engines with a camshaft power take-off?

A. I have seen the design of that, and I presume that some of them have been built, but I would rather that come from the sales department, as I don't know whether they go out in the field or not.

Q. But engineering-wise you know they have?

A. Yes.

• • • •

Redirect Examination

• • • •

Q. Now, on cross-examination you said that with respect to the Clinton light weight engine that except for mounting feet and except for the machining that was done to the casting, that the castings for the two — that is, the horizontal shaft engine and the vertical shaft engine, were the same, is that what you said?

A. Now, that should probably be qualified a little more, and that is that if it is talking about a raw casting that does not signify any engine, but there are different machining operations that change it and identify it.

Q. Yes, but disregarding the machining required and the amount of the machining —

A. Well, there is a difference in these blocks, in the cylinder liner wall.

Page of Transcript

The cylinder liner in this block D-114, which is the horizontal Clinton engine, is longer than the one in D-113, which is the vertical engine.

Q. Now, in the Clinton light weight engine if you wanted to have a rotary camshaft with the power take-off, would that not require a different camshaft and different bearing arrangement for the camshaft, than otherwise would be necessary?

341 A. Well, it would be necessary to employ a different camshaft. With the camshaft stationary you can't take power off of it if it is standing still. You would need different bearings and a different oil slot, and things of that nature.

342 Q. A die-cast aluminum chrome plated cylinder bore with an aiuminum cast piston running in it on the one hand, and on the other hand you have the construction as used by Clinton in the light weight engine.

A. They are not equivalent construction.

---

343 RUDOLPH L. LOWELL

Direct Examination

Rudolph L. Lowell, Des Moines, Iowa, 47. I am a patent lawyer with offices in Des Moines. I received a BS degree in Mechanical Engineering at the University of Wisconsin in '31. I received my law degree from the same school in '36. I am a member of the Bar of Iowa, Missouri, Wisconsin, and Illinois. And admitted to practice in the Patent Office also. I was employed as 344 an engineer shortly after I graduated as an engineer in '31. That was at the time when you could hardly buy a job. I tried for awhile and went back to school, I could make more money going back to school. I was

ge of
anscript

employed by Fairbanks-Morse and Company at Beloit, Wisconsin, in the experimental department, its diesel engines. I worked on gasoline engines during the summers of 1927 and 1928. That was also for Fairbanks-Morse and Company on what we call their Z engine. After I graduated from law school I went into the patent department of Fairbanks-Morse and Company, first in their patent law office at St. Louis, and later on at their plant in Beloit, Wisconsin; and at that time there was made at that one plant small gasoline engines, magnetos, air-conditioning equipment, centrifugal pumps, reciprocating pumps, two and four-cycle engines. Then I also was in charge of their scale plant. And I left that patent
45 department in 1939 and was employed in the general practice of patent law in Chicago, and my main work was with Motorola equipment, primarily radio, TV, and so on. And I left Chicago in '43 and went to Des Moines, and I have been there ever since. My practice at Des Moines involves litigation, validity opinions, searches, negotiations of contracts, and many times just business counsel — very general.

I have studied the Lechtenberg patent in suit 2,693,789. There is nothing in the specification or in the claims that mentions anything at all about variables and constants.
46 Those terms just don't appear. The horizontal shaft engine shown in figure 2 is described as having a cylinder and a crankcase cast as one piece. It is not the entire cylinder and crankcase cast as one piece. It would be more of the nature structurally speaking as the cylinder. That does not include the cylinder head. In other words it is not the entire body of the engine as described in the patent. The cylinder and crankcase of the engine, as shown in figure 4, is taught as being one casting also,

Page of Transcript

except for the head and the wall which close the power take-off end of the crankcase, with the head being referred to as 6 and the removeable wall as 8.

The patent does not teach the use of the same identical crankcase and cylinder when the engine is used as a
347 horizontal shaft engine, Fig. 2, and when it is used as a vertical shaft engine 4. And referring to column 5 of the patent — "If the engine is intended for operation with its cylinder vertical the crankcase-cylinder casting 3 is provided with integral mounting feet 32 and bosses 33 at opposite sides of the casting, either one of which may be drilled and tapped to provide an oil drain port. But when the engine is intended for operation with its cylinder axis horizontal, the feet and drain port are not needed and hence those portions of the die or mold in which the feet and bosses 33 are formed would be blocked off." Now, there is also one other change that would be made, and that is in the adding to the main casting a bracket 165 for an oil splasher system. That oil splasher is shown in the Lechtenberg patent in Fig. 7, and it is also shown in the assembly in Fig. 4. In figure 7 it has reference as 165. There is a description in the specifica-
348 tion as to the oil splasher — the splasher 165 as shown in Fig. 7, in Column 10 starting with line 61. Other differences between the cylinder crankcase casting of the horizontal shaft engine and a vertical shaft engine, as disclosed by the Lechtenberg patent, are rather minor. They are shown in Fig. 8. An oil hole 164 that is made in a pocket 163 when the engine is used in vertical operation, but that is not described anywhere relative to horizontal operation.

Referring to Fig. 3 of the patent, that item 138 is a cover for what I believe is referred to as a breather as-

sembly 127. And what it does on the casting itself is to just close the air breather vent, if you want to call it that, 122, which is in the upper wall of the casting, and which would open out to the atmosphere except for the breather assembly 127. The cover 138, the breather assembly, would be an essential part of the cylinder-crankcase assembly to make what you would say is an operational engine.

50 Casting the entire engine body in only two parts is not taught in the Lechtenberg patent, and I refer to column 4, line 30, which says: "This main casting —" that will be referring to the casting 3 — "— together with a cylinder head 6, and a crankcase cover casting 7 or 8 (depending upon the intended use of the engine) comprises the entire body of the engine." At column 1, lines 34 to 41, we have the same definition there as to what comprises the body of the engine. That states: "With a view toward taking full advantage of this expedient, the present invention has as its purpose to provide an internal combustion engine of the character described wherein many of the individual component parts of engines as they had been built before are an integral part of either one of two main castings which together with a cylinder head comprise the body of the engine."

51 The cylinder and crankcase in the Clinton VS 100 engine is not a single casting or one casting. It clearly appears on this Exhibit D-113 that the cylinder is provided with a cast-iron liner and also there is a bushing insert for the crankshaft, and plus the fact that also a cover plate for a breather assembly would be required. The patent makes specific exclusion of any kind of a liner for either kind of engine shown in their Fig. 2 or

Fig. 4, and in fact in column 4, beginning with line 75, it states that: "The crankshaft is of conventional construction but the piston 5' though of conventional design and cast of aluminum alloy is distinguished by the fact that it is plated with chromium or some other suitably hard wearing metal. By this expedient it is possible to
352 have both the cylinder and the piston formed of the same basic die casting metal without incurring the cost of lining or plating the cylinder wall, for contrary to previous belief, it has been conclusively demonstrated that the piston rings will not unduly wear a naked, unprotected aluminum alloy cylinder wall. The saving thus effected is substantial since to plate the piston costs but a fraction of what it costs to either plate or line the cylinder wall."

The Lechtenberg patent does state as one of its objects the production of a cheap or less costly engine than those on the market at the time, but the underlying and motivating objective of the invention is to produce an engine which delivers more horsepower per dollar of cost and pound of weight than has heretofore been achieved. Of course that is done by die-casting of aluminum. And there is also mention of other parts going to reduce the cost, such as for example in column 8 beginning with line 15: "The manner in which the breaker arm 91 is mounted exemplifies the extent to which this invention has gone to reduce the cost of an engine and simplify its assembly. As best shown in Figure 14 the breaker arm is stamped from sheet metal — ".

353 In my experience as a patent attorney the practice in the drawing of an application if one intended to include the cast-iron lining as a part of the crankcase-cylinder casting wouldn't be to limit it to either one casting or a single casting or one integral casting. I think it could be

more properly referred to as an integrated casting, or just an integral casting without the limitation of "one" or "single" preceding casting.

Q. Has it been the practice to show the liner also?

The Court: The liner is shown in other patents? Do you know of any shown?

A. Yes, other liners are shown in other patents. It has been the practice, yes.

Claim 6 of the Lechtenberg patent could be considered as representative of the claims here in suit. In my opinion claim 6 would not read on the VS 100 engine.

The chart Exhibit D-125 shows a cylinder and crankcase casting with a portion cut out similar to what is shown here as physical Exhibit D-113. In addition it shows the cover member for closing the open side of the casting. Then there is shown the camshaft assembly C and below that is an unnumbered crankshaft. In other words, this Exhibit D-125 shows the VS 100 engine, or portions of it. Claim 6, after we get by what could be called the preamble, "is characterized by the fact that" reads: "The cylinder and all portions of the crankcase except its bottom wall through which the lower end of the crankshaft passes is one casting." And as previously explained with regard to the physical Exhibit D-113, the crankcase-cylinder assembly of the Clinton VS 100 engine includes a cast-iron cylinder liner. It also includes a bushing for one end of the crankshaft. And also to complete the crankcase it needs a cover here for a breather assembly. When I say here, I am referring to the rectangular opening which is to one side of the cylinder.

Page of Transcript

355 This limitation, namely, that "the cylinder and all portions of the crankcase except the base or bottom wall through which the lower end of the crankshaft passes is one casting," is a limitation in all of the claims. In claim 1 that limitation appears in line 82. That reads, "a single casting," in claim 1. In claim 2, line 15, it calls for "one casting." Claim 4, although not in suit is dependent on claim 2, so that would have the same limitation. In claim 5, line 52 calls for "one casting." In claim 6, in line 9, it calls for "one casting." Claims 7 and 8 are dependent on claim 6. And claim 14, line 39 it calls for "one casting." Claim 15 is dependent on claim 14. And in claim 16, line 81, it calls for "one integral casting."

The claims of the Lechtenberg patent are not limited to a four-stroke cycle engine. Claim 1 is broad enough to read on either a two or four-cycle engine. And other claims, except claims 14 and 15, do call for a single cylinder four-stroke cycle internal combustion engine. But the claims and the specification do not necessarily restrict it to just four-cycle engines, and in that respect the
356 Patent Office applied art that was directed to two-cycle engines. And also in the petition to make special, filed by the applicant Lechtenberg, the petition shows two-cycle engines are also pertinent here. Insofar as cited by the Patent Office and referring to two-cycle engines, the patent of Forster, 2,404,833, the patent of Lutz, 2,606,541, and the patent of Molnar, 2,256,002. Now, with respect to the petition to make special, where the petitioner or applicant Lechtenberg set up certain prior patented art,
357 on that list and as representative of the two-cycle is patent 2,590,134 to Slonneger and 615,766, which is Vansickle.

358 As stated in the patent to Conover No. 2,227,247, Exhibit D-99: "It is the primary object of the present in-

vention to provide novel and improved engine constructions with particular reference to the location and formation of cores, passages and jackets to facilitate the die casting of the engine cylinder and crank case structure." And in all of the constructions illustrated and as set out in the patent on page 4, column 1, line 67: "In each of the several constructions illustrated, the main or principal casting comprises the engine cylinder block and at least a portion of the crank case and is die cast under pressure upon the sleeve-like insert which constitutes the cylinder lining." And the patent here, Conover, is one of the prior art patents where the cylinder liner is illustrated. And in the illustration in the Conover patent from figures 1 through 8, the construction illustrated there shows the top half of a crank case formed as one casting with the cylinders, the bottom half of the crankcase being with what could be called the lower half bearing, and with the division line taking place right on the axis of the crankshaft. Then, in figure 9 there is shown still another
359 structure in which the one casting includes a water jacket, 210, a cylinder wall 220, and a crankshaft bearing 85. Then it has as its closure plates — there are two closure plates shown, this closure plate 87, which is directly opposite the cylinder; then a second bearing 86 which closes the lower end of the crankcase.

Q. Is that number 86 there on the end of the crankshaft, is that a removable plate 86 located —

A. It is at the lower power take-off end.

360 The upper end of the cylinder in Figure 9 is closed with a cylinder head. I don't believe it has any numeral designation. That is the same practice as followed in Lechtenberg. In the figures 17 and 18 [of Conover] there is

Page of Transcript

disclosed an engine body, and it is made out of one casting with the engine cylinder 212 and water jacket 213, the top and side walls of a crankcase 214 and a fuel tank 215. Those are all formed in one casting. Some of the parts of the one casting are unnumbered. The engine cylinder, 212, water jacket 213, and then on the crankcase 214 it has the top and side walls which have no numbers. And then the fuel tank 215. The wall of the crankcase opposite the cylinder is one casting with the cylinder. As shown this is — this would be for an outboard motor. And the walls that are formed integral with the cylinder are the upper wall and the wall opposite the cylinder, and it has a lower wall that is removable. He specifies
361 die casting. Figure 18 shows the entire crankcase as a single casting with the cylinder, except for the removable wall 136, which is the power take-off wall — the end wall of the crankcase. And it might be noted insofar as figure 17 goes, that also shows a liner incorporated in the cylinder. The descriptive portion in the patent describing figures 17 and 18 is on page 4, column 1, beginning with line 19, and it states there that figures "17 and 18 do not go into detail with regard to water passages or passages for the admission or transfer of the combustible charge. The purpose of Figs 17 and 18 is to disclose an arrangement in which a single casting, preferably made by die casting, includes the engine cylinder 212, its jacket 213, the top and side walls of the crankcase 214, the fuel tank 215 and flanges 216, which provide fairing along the sides of the cylinder." And then as a further part of that
362 description and beginning also on page 4, column 1, line 45, it states that: The bearing sleeve 136, which is the removable closure for the bottom side of the crankcase, as shown in figure 17, "Will ordinarily be extended to

comprise a housing for the extension of the crankshaft 241 in an outboard motor structure, but it may be otherwise designed for other uses." From there on it mentions the matter of the casting, as to how the cores are to be withdrawn to form the various constructions in figures
363 17 and 18. I don't believe that he specifically refers to Figs. 17 and 18, that there is any description made of the cylinder liner. But the liner is specifically mentioned as being incorporated, on page 1, column 2, beginning at line 48. And also following Figs. 17 and 18 in the portion referred to above on page 4, column , beginning with line 67. It mentions it in each of the constructions. On page 1, column 2, beginning there at line 48, where Conover says: "A sleeve 20 of iron or other suitable material is cast as an insert into a single die casting unitarily providing the dual cylinder block 21 and that half portion 22 of the crankcase which is contiguous to the cylinders."
364 By that, he does not intend to mean even having the insert cast as an insert into a single die casting. That is, putting the insert into a single die cast and still having it as your cylinder liner.

Now, in the Conover disclosure on figures 17 and 18, the parting line in the die casting of the cylinder-crankcase is in the removable closure 136. In other words, in the bottom wall of the crankcase is where the parting line is. That wall is removable. The parting line of Lechtenberg is in the same place.

* * * *

366 The chart Exhibit D-126 faithfully and correctly reproduces Figures 17 and 18 of the Conover patent. I have compared Claim 1 of the Lechtenberg patent with the Conover disclosures. Referring to Chart D-126 which

Page of Transcript

has the elements of Claim 1 of the Lechtenberg set out. "A. A single cylinder internal combustion engine having a crankcase with two spaced apart side walls." Those are shown on the Conover patent. The crankcase is 214. The upper wall has no number, but it is just to the left of the numeral 214. There is a lower cover 136. "B. Each of which carries a crankshaft bearing," — the bearing is unnumbered in the Conover patent, but they are clearly disclosed. It is lettered on the chart as B. C is the cylinder, which is 212, and designated on the chart as C. "D — and a crankshaft journaled in the bearings with its ends projecting from the crankcase," designated
367 on the chart as D, and on the patent as 241. "E — one end of the crankshaft having a flywheel mounted thereon," designated as E, and the patent designation is numbered 132. "F — and the other end being the power take-off end of the shaft." That is designated by the letter F — and the bearing sleeve will ordinarily be extended to comprise a housing for the extension of the crankshaft in an outboard motor at the lower end of the shaft 241 which is the power take-off. "G — characterized by the fact that: the cylinder and all portions of the crankcase including the wall thereof remote from and facing the cylinder, except that wall of the crankcase which carries the bearing for the power take-off end of the crankshaft is a single casting;" — that is designated by the letter G, and that includes the cylinder, the crankcase portion, 214, and there is also designated the wall opposite the cylinder which is formed as an integral part of the crankcase, and the cylinder casting, and the end wall. There is at the power take-off a removable closure, 136. And, "H. — and further by the fact that said wall of the crankcase which carries the bearing for the power take-

off end of the crankshaft is provided by a cover removably secured to said casting so that said cover is interchangeable with others of different design to adapt the engine to any of a variety of different installations without necessitating alteration of the cylinder-crankcase casting." In the disclosure of Conover, which was read
368 previously, on Page 4, Column 1, and beginning with Line 48, it states: "The bearing sleeve will ordinarily be extended to comprise a housing for the extension of the crankshaft 241 in an outboard motor structure but it may be otherwise designed for other uses."

369 Referring to Figure 1 of the Bosma patent, the crankcase housing is designated near the lower right-hand corner as number 15, and the cylinder is designated by the number 16, and that appears toward the upper left-hand top of the drawing. Insofar as the construction of the cylinder and crankcase, the Bosma Patent merely refers to a casting — I am reading on Page 1 of the patent, and that appears in Line 47, and "a crankcase housing 15" which appears in Line 50, but the drawing clearly shows that the cylinder 16 and crankcase housing are a one piece casting. That is true of the entire crankcase, except the lower end which is formed of a two piece cover member. That is shown clearly in Figure 3. That includes what is referred to as an oil reservoir 14, and the reservoir cover plate 38 prime, the number 38 prime is carried towards the middle left of the drawing of Figure 3. The parting line of the Bosma patent, and again referring to Figure 3, is the sectional line
370 indicated as 6. That parting line is in the same place as shown in the Lechtenberg patent. The reservoir, I believe, is number 14. It is to maintain oil within its confines for any position of the motor shown in the Bosma

Page of Transcript

patent in conjunction with the oil reservoir plate which is designated as 38 prime, and plate number 38 prime has only two openings 38 in it which appear best in Figure No. 6. They are the oval shaped openings in about the middle of Figure 6. Where it is used as an outboard motor the oil is trapped within the oil reservoir whenever the engine is turned on either side, or where, in the case of, say, pulling a boat up on shore the motor is tipped into a horizontal position so as to keep the oil from running into the cylinder. What keeps the oil from sump 14 from running down the shaft in the reservoir 14, from running down the power take-off end of the crankcase 20, is the upright boss that carries the oil seal 31 prime. In the Bosma patent itself, on page 2, column 1, line 20, the boss is designated as extending upwardly from the bottom of the oil reservoir 14. And referring
371 again to the patent, Page 4, Claim 9, beginning with Line 3, it states: "A tubular boss extending upwardly from the bottom of the reservoir through which the crankshaft extends and within which the oil seal is positioned, said boss preventing escape of oil from the reservoir." Referring particularly to the cover 8, shown in Figure 5 of the Lechtenberg patent, the boss of Bosma would have the same function as the boss, I believe the numeral designation is 156 in the Lechtenberg patent. In Figure 10 of Lechtenberg patent the boss is 143. But in Figure 10, I do not believe the function of the boss would be the same as the function of the boss in Figure 5, because the cover 8, in Figure 5, is for a vertical shaft operation when the oil is carried in the cover, whereas in Figure 10 that cover would fit on the side of the engine.

372 Claim 2 of the Lechtenberg patent is set out on the chart Defendant's Exhibit D-127, and take the letter "A.

Page of Transcript

A single cylinder four-stroke cycle internal combustion engine having a crankshaft." The crankshaft numeral in Bosma is the numeral 20, and is designated by the letter A. "B. — a camshaft parallel to the crankshaft." And that is the camshaft 26 of Bosma. "C. — a cylinder." And that is the numeral 16 of Bosma. "D. — and a crankcase, through opposite walls of which the ends of the crankshaft pass." The crankcase is designated by the letter D and in Bosma the crankcase is number 15, and is the crankcase housing through the opposite walls of which the ends of the crankshaft pass — referring to Bosma, Figure 1 in the chart, one of the walls is the top wall which is formed as a part of the crankcase housing, and the other wall is the two piece cover consisting of the oil reservoir 14 and the reservoir cover plate 38 prime. "E. — one end of the crankshaft having a flywheel thereon." That is the upper end of the crankshaft, and the vanes on the flywheels are designated in the patent as 23. "F. — and the other end being the power take-off end of the crankshaft." That is the lower end of the crankshaft which is
373 secured to the propeller shaft 35. Designated as F in the chart. And "G" — designated as such in the chart — "characterized by the fact that: the cylinder and all portions of the crankcase including the wall thereof remote from and facing the cylinder, except that wall of the crankcase through which the power take-off end of the crankshaft passes is one casting." That would refer to the crankcase housing 15 being formed with the cylinder 16, and the wall comprised of reservoir 14 and the reservoir plate 38 prime is the wall through which the power take-off end of the crankshaft passes. "H." — of the chart — "by the fact that said wall through which the power take-off end of the crankshaft passes is provided

Page of Transcript

by a cover removably secured to said casting." And reservoir 14 and its cover plate 38 prime are removably secured to the crankcase housing 15 by bolts which are unnumbered in the drawing, but are clearly shown in both Figures 1 and 2, towards the lower end of Figure 2, and also in the same location relative to Figure 1. And, "I. — by the fact that the crankshaft and the camshaft are supported by said cover and the wall of the casting opposite the cover." It is best shown in Figure 2 of the chart designated by I. The camshaft 26 has its upper end supported and also crankshaft 20 has its upper end supported in the top wall of the crankcase housing as shown in Figure 2, and their opposite ends are carried in the two piece cover member 14 and 38 prime. "J. — and
374 by the fact that the supports for the camshaft comprise wells in the cover and said opposite wall of the casting." Insofar as the cover is concerned, there is a well shown in the lower end of reservoir 14. In other words, the camshaft does not extend through, and the same is true of the upper end of the crankcase housing 15 which supports the upper end of the camshaft 26.

Applying Claim 6 of the Lechtenberg to Bosma, referring to chart Defendant's Exhibit D-127-A, the letter designated A on the chart: "A single cylinder, four-stroke cycle internal combustion engine adapted for operation with its cylinder horizontal, said engine having in addition to its cylinder a crankshaft." The cylinder is designated on the drawing as 16, and the crankshaft as 20. The letter, "B," on the chart: — "B. — a camshaft parallel to the crankshaft." That is the camshaft 26 of Bosma, and the letter C designated on the chart — "and a crankcase with spaced apart top and bottom walls through which the upper and lower ends of the crankshaft pass."

That is the top wall, shown in Figure 2 of the chart, and the two piece removable cover shown in the lower end of Figure 2 on the chart, and with the letter D: — "D. — said engine being characterized by the fact that: The cylinder and all portions of the crankcase except its bottom wall through which the lower end of the crankshaft passes is one casting." And that is the crankcase housing 15 and the cylinder 16 formed as one casting; and the bottom wall, through which the lower end of the crankshaft 20 passes, is not formed with the housing 15 and cylinder 16. The letter designated E on the chart: — "E. — by the fact that said bottom wall comprises a cover removably secured to the casting and having a relatively deep depression." That is the two piece bottom wall that carries the numeral designations 14 and 38 prime and with a relatively deep depression being in the oil reservoir 14. "F. — by the fact that the camshaft is supported by the cover and the top wall of the crankcase." That again is the camshaft 26, and as shown, in both Figures 1 and 2 on the chart, it has one end supported in the top wall of the crankcase housing, and its lower end supported in the cover member. "G. — and the bearings for the crankshaft are in said cover and the top wall of the crankcase." And it is seen that there is a bearing in the upper wall for crankshaft 20 and a bearing in the two piece cover member designated as 30 in the Bosma patent. "H — further by the fact that the depression in the cover provides an oil sump." And that is the oil reservoir 14 of Bosma. And, "I: — and said cover being further characterized by mounting means formed integrally therewith for mounting the engine with its cylinder horizontal." Those mounting means are shown in Figure 2 and possibly somewhat better in Figure 3 of

Page of Transcript

the Bosma patent as the annular flange that extends from
376 the bottom of the oil reservoir 14, immediately surrounding the boss portion for the crankshaft 20.

Reading a typical claim such as Claim 6 on the Lauson engine, defendant's Exhibit D-78, referring to chart Defendant's Exhibit D-128 which carries the Claim 6 of Lechtenberg: — "A. — A single cylinder, four-stroke cycle internal combustion engine adapted for operation with its cylinder horizontal, said engine having in addition to its cylinder a crankshaft." And the elements of the claim are set out (1) A cylinder. And that carries the number 1. On the corresponding portion of the photo 2 is the crankshaft which is a separate photo. That is designated as 2. "3. a crankshaft" — also designated
377 by the number 3, and the relationship of the crankshaft and the camshaft being parallel is shown in a reproduction of Figure 2 of the patent which is carried below the photo. In the actual engine the crankshaft and the camshaft are parallel. "4. — a crankcase with spaced apart top and bottom walls through which the upper and lower ends of the crankshaft pass." The numeral designation shows what is the upper wall in the main casting, and in the portion immediately below that is the oil reservoir 14 and the center opening would be where the crankshaft extends through. "Said engine being characterized by the fact that: the cylinder and all portions of the crankcase except its bottom wall through which the lower end of the crankshaft passes is one casting." That one casting is designated by the number 5 in the chart. In the upper left-hand. "By the fact that said bottom wall comprises" — and that is designated by the numeral 6 — "a cover removably secured to the casting" — and that cover would be the two pieces compris-

Page of Transcript

ing the one piece that has a sort of a gooseneck formation on it, and the other piece which goes to form numeral 6— is the oil reservoir plate. "And having (7) a relatively deep depression" — and the depression, in the cover des-
378 ignated 6, as indicated in the middle photo — "by the fact that the camshaft is (8) supported by the cover and the top wall of the crankcase" — and is carried, as shown by the numeral 8 in the upper left-hand corner with its lower end in an opening, which is shown on the oil reservoir cover up towards the upper part of that photo, and which appears as the second one at the right on the top line. "9. — bearings for the crankshaft are in said cover and the top wall of the crankcase" — and the bearing, in the top wall, is indicated by the numeral 9, and the bearing, in the bottom wall, is also indicated by the numeral 9. "Further by the fact that the depression in the cover provides an oil sump." That is the depression within the cover and designated as 6, and having the gooseneck portion. "And said cover being further characterized by mounting means formed integrally therewith for mounting the engine with its cylinder horizontal," is the mounting means 10. I do not see any numeral designation on the chart, but that is shown in the chart as being the annular flange projecting downwardly from the oil reservoir 14. That appears on the actual Exhibit D-78. Cover plate D-79 also responds to ele-
379 ment 10. On Exhibit D-79 the mounting means that responds to element 10 of Claim 6 would be the downward extension from the oil reservoir.

Turning to chart Defendant's Exhibit D-129 of the Vansickle Patent No. 615,766. I find a response in the Vansickle patent to Claim 1 of the Lechtenberg patent. By referring to the chart Defendant's Exhibit D-129 the

Page of Transcript

letter (A) — "A single cylinder internal combustion engine having a crankcase with two spaced apart side walls."
380 The crankcase is indicated as 16 at the bottom of Figure 1, and it has two spaced apart side walls which are designated by the letter (A). "(B) — each of which carries a crankshaft bearing." Those bearings are designated as numerals 12 and 13. They are designated on the chart by the letter B. (C) — is a cylinder which is designated by the letter C, and the numeral 11. "(D) — and a crankshaft journaled in the bearings with its ends projecting from the cankcase." That is the crankshaft 14 which has its ends journaled in the bearings 12 and 13. "(E) — one end of the crankshaft having a flywheel mounted thereon." It is the letter E on the chart, and its numeral designation is 60. "(F) —and the other end being the power take-off end of the shaft." That is the end of the shaft designated by the letter F in the chart. "G — characterized by the fact that: the cylinder and all portions of the crankcase including the wall thereof remote from and facing the cylinder, except that wall of the crankcase which carries the bearing for the power take-off end of the crankshaft is a single casting." That is the single casting designated by the letter G, and the wall facing the cylinder which is the bottom wall as shown in Figure 1 is formed as a part of the casting 10, which includes the cylinder 11. Element 10 is described by Vansickle, on
381 Page 1, Column 1 of his patent, beginning with Line 39, "In the drawings, 10 indicates a casting the upper end of which is bored out to form the cylinder 11." An element H is shown in the chart, Defendant's Exhibit D-129: "And further by the fact that said wall of the crankcase which carries the bearing for the power take-off end of the crankshaft is provided by a cover removably secured

ge of
inscript

to said casting." And that would be the cover 15, also designated by the letter H. "So that said cover is interchangeable with others of different design to adapt the engine to any of a variety of different installations without necessitating alteration of the cylinder-crankcase casting." There is not anything specific in Vansickle speaking about interchangeability, but that is a functional statement, following a recitation of the removable cover, so that if it is removable there is no reason why it could not be interchanged. The structure is there.

The pertinence of Hennecke Patent No. 2,097,662 would be in his providing a standard windshield wiper motor in which he provides three standard adapters to fit about 200 different applications for the reason which he states in his patent. I am reading in the patent, Page 1,
82 Column 1, beginning with Line 23: "From the standpoint of the manufacturer who is turning out thousands of identical cars, such practice may be desirable, but from the standpoint of the accessory dealer who is required to replace windshield wiper motors, the practice has proven highly undesirable since in order to completely supply the trade the dealer must carry in stock several score models and a complete line of wipers would involve stocking nearly 200 different styles of motors to accommodate the trade if an exact duplicate of the worn or broken motor is to be used for replacement purposes." All he has done is to provide a standard motor—referring to Figure 1:—generally the base of it is indicated at 10, and that motor only carries the two mounting portions 15 to adapt it to all of the various mountings for a windshield wiper motor.

Page of Transcript

Briefly, and referring to Figures 1 and 2 of Fowler Patent No. 2,218,332, he discloses a one piece casting. That includes, as one piece, the cylinder head 16 which appears at the top of the picture in Figure 2, cylinder 14, and one bearing 18. The bearing end is 28. It is one end of the crankcase portion 18 which also carries a bearing for the crankshaft 24, and that portion of the engine,
383 to complete the engine body, is closed with a pan 40, which appears in the lower left-hand of Figure 2, and with a separation line being at an angle of about 45 degrees with the axis of the crankshaft. Figure 4 is a modified form in which the removable portion that is cut at a 45 degree angle with the crankcase 18 carries a cover 40 prime. The bearing for the crankshaft 24 is 80 — in addition to the crankshaft bearing which is carried in the main casting that includes the cylinder head 16 and cylinder 14; and again that cover 40 prime is put on at an angle of 45 degrees with the axis of the crankshaft and carries as an integral part lugs 82 by which the engine can be mounted. And referring to Figure 5, there is still maintained the same one piece casting of the cylinder head 16 and cylinder 14, and the casting, its counterpart to interchange with the cover 40 prime to produce a two cylinder engine, and with a parting line still being at an angle of 45 degrees with the crankshaft. And he states in his patent, on Page 2, Column 2, beginning with Line 19: "The above described feature permits the combined cylinder 14, cylinder head 16 and crankcase portion 18, forming an integral unitary structure." The way Fowler has it here it illustrates two cycle, but it also could be adapted to a four cycle. That appears on Page 2, Column 2 of his patent beginning with I think that would be Line 72: "While in the case of a four-cycle engine

or of a Diesel type engine this volume is not of such great importance and it may be made of sufficient size to hold the usual supply of lubricating oil or the like as will be appreciated by those skilled in the art." And he refers again to two and four-stroke cycle engines on Page 2, left-hand column, at Line 18. At that point it states: "The present invention is applicable for use in connection with internal combustion engines of either the two or four stroke principles, diesel engines or any other type of engine including a crankshaft and a piston reciprocable along an axis at substantially right angles thereto."

The Lechtenberg patent, Page 1, of the disclosure, Column 2, beginning with Line 5, says: "By contrast, the engine of this invention is so designed that it may be adapted to a wide variety of uses without in anywise changing the cylinder-crankcase casting." The disclosure of the Lechtenberg patent does not support this statement in the preamble because as previously described when it is changed from the horizontal shaft type of Figure 1 to the vertical shaft type, as shown in Figure 4, and as
385 stated in the Lechtenberg patent on Column 5, beginning with Line 25, and which was previously read,—the mounting feet 32 and boss 33 are removed from the main casting when it is to be used for vertical shaft operation; and, also, as previously explained, the oiling system is changed in that the bracket 165 shown in Figure 7 is further substituted for the dipper 22 shown in Figure 3. And again, Column 2, Lines 16 to 22, the Lechtenberg patent states: "To illustrate how easily the engine of this invention may be adapted to different uses, it might be noted that the adaption of an engine intended for ordinary general utility with the engine operating in

Page of Transcript

an upright fashion, that is, with its cylinder vertical, to horizontal operation as in rotary type lawn mowers, merely requires the simple substitution of one cover casting for another." That statement is not supported by the Lechtenberg disclosure, and for the same reasons given relative to the previously quoted Column 5. Referring now to Column 11, Lines 34 to 39, the specification states: "Thus, as already clearly shown, the same engine may be adapted either to general utility (in which case the engine operates with its cylinder axis vertical), or such special purpose as driving the blade of a rotary type lawn
386 mower (in which event the engine operates with its cylinder horizontal) by simply selecting one of two crankcase covers." The Lechtenberg patent disclosure does not support that for the reason that the legs 32 and the boss 33 are removed and it requires a different lubricating system.

The Court: Am I correct that you are talking about the disclosure of the patent, and not about the disclosure of the machines they have shown in the moving picture and otherwise?

Witness Lowell: We are referring to the disclosures as made in the patent as not supporting those statements of the patent. No, they are not supported there.

The Court: You are not interpreting them in the light of the engine as actually made?

A. I am interpreting them in the light of the disclosure of the patent.

387 It is my opinion that Claim 5 of Madle does not read on the defendant's structure. Briefly, and referring to the chart designated as Defendant's Exhibit D-132, and referring to the numeral (1), "a member carried by said

Page of Transcript

388 rotatable part for rotation therewith and for motion relative thereto in response to centrifugal force." The only element of defendant's structure upon which that part of Claim 5 can read would be the centrifugally actuated arm designated at the right-hand side of the chart by the numeral 1, but that member does not have a cam surface on said member engaged by said cam follower for imparting motion to the cam follower in said direction once each revolution of the rotatable part to effect breaker point separation at instants depending upon the speed of crankshaft rotation and the position of said member relative to the rotatable part as determined by the centrifugal force acting on said member. In the defendant's structure, the cam forms what might be called a sleeve member designated by the numeral 3 in defendant's structure in D-132, and it is interconnected with the arm 1 by what might be called a tooth in a gear connection. And the member 3 only moves in response to the force exerted on it by the centrifugally actuated arm 1, and there is no cam surface on the member No. 1 designated in blue on the chart.

Cross Examination

391 Q. If you knew, or had learned, that men skilled in the art ordinarily and usually referred to a cylinder crankcase body like Clinton — you know that there is a liner in there, in the Clinton lightweight crankcase cylinder body, like Plaintiff's Exhibit 16-C — if you knew that they ordinarily referred to such unit as a casting and even though it had that liner in it, would that change your opinion that the Lechtenberg claims do not read on the Clinton engine because of its iron cylinder liner?

A. No, that would not change my opinion. Because in the Lechtenberg patent, I feel that if the liner were

Page of Transcript

to be included as a part of the cylinder and crankcase one piece casting that Lechtenberg would have made a disclosure of it to include it in there rather than to make a specific exclusion of it in his patent.

Q. Does he specifically exclude it from his patent?

A. I would say that he does. I would again like to refer to the Lechtenberg patent, Column 4, to where it refers to, beginning with Line 75 at the bottom of Column 4, beginning with Line 75: "The crankshaft is of
392 conventional construction but the piston 5 though of conventional design and cast of aluminum alloy is distinguished by the fact that it is plated with chromium or some other suitably hard wearing metal. By this expedient it is possible to have both the cylinder and the piston formed of the same basic die casting metal without incurring the cost of lining or plating the cylinder wall, for contrary to previous belief, it has been conclusively demonstrated that the piston rings will not unduly wear a naked, unprotected aluminum alloy cylinder wall. The saving thus effected is substantial since to plate the piston costs but a fraction of what it costs to either plate or line the cylinder wall." So it is my opinion that, in keeping with reduction of cost as one of the main objects stated for Lechtenberg, he definitely excluded a liner from being included as a part of his casting.

Q. Isn't it true that the disclosure of a patent may describe and point out features some of which may even be entirely novel to the patentee, which he recognizes as novel, but which he does not claim in the patent?

A. That is true; and where some of those things are
393 pointed out, and they may be novel and he doesn't claim them, then, of course, they are dedicated to the public.

Page of Transcript

But to me, it is clear that he did claim exactly what he had, and that is, one casting, or a single casting, because he expressly excluded the liner.

Q. Now, I will ask you another hypothetical question: Suppose you are the attorney for somebody who has an invention involving some subsidiary invention, suppose he has a new kind of a cylinder, and basically new you say, and suppose there is some subsidiary invention on it, a new kind of a fin, how would you write a claim that only claims that cylinder without also including the new kind of a fin?

A. Do I understand from your question that something in the cylinder was novel without including the fin?

Q. Yes, and the fin was also novel, and you want to claim the novel feature of the cylinder without claiming the novel thing about the fin?

A. I would describe and disclose the cylinder without putting the fin on, and put on the fin, as a modified form, and write the claim both ways.

Q. How would you write the claims that did not include the fin?

A. Write a claim to the cylinder without including the fin.

Q. You said that you would claim it both ways, how could you do it without including the fins?

A. By not including the fins in one of the claims.

394 I would consider that so far as the Conover Patent engine of Figures 17 and 18 being used as a lawn mower engine that it would be a matter of equivalence to substitute fins for the water jacket — that is something not outside of the realm of design. Conover wants to use it for

Page of Transcript

395 outboard motors. As shown there that would be its primary use. Insofar as other uses are concerned, you could use it any place that water might be available, such as farm use if they have water there, just connect it up.

Q. What is your understanding of the terms "constants" and "variables"?

A. As they have been used in this case, and as to the constants, I don't have any understanding of it whatever. As applied to engines, I have never heard any discussion as to where you could say, referring to an engine, and say that something in it was either variable or constant, I don't know.

Q. Do you recall, or not, with reference to this statement in the record, and I am reading from the last three
396 lines of Page 524 of the trial record and the first couple of lines on Page 525 of the testimony of Mr. Cantor. It says here concerning the Lechtenberg invention: "The Lechtenberg invention apparently is the location of constants — all constant elements which will not be changed, in one casting which is the expensive casting, and the location of non-constant elements in a relatively inexpensive base plate." Do you recall reading that?

A. Yes, I recall reading that. It did not mean anything to me at the time, and frankly, it does not mean anything to me at this time.

Q. Did you call on Mr. Cantor to find out what he thought about it?

A. No, I did not.

Page of Transcript

399 LEO J. LECHTENBERG

Direct Examination (Adversely)

Leo J. Lechtenberg. Age forty-two. I reside at 1040 Katherine Drive, Elm Grove, Wisconsin. Occupation, development engineer. I have been employed by the Briggs & Stratton Company since 1938. I am the Leo J. Lechtenberg whose patent is here in suit.

400 Immediately after graduation from school, in 1938, I started in the Briggs & Stratton engineering department, and I was first employed as a draftsman, then project engineer, and later on as development engineer. I was educated at Marquette University. I received a Bachelor of Mechanical Engineering Degree in 1938.

Briggs & Stratton makes die cast automotive locks. They were in the die casting business at the time I entered their employ. I don't think I could state the exact time I first learned of die casting as applied to gasoline engines. I know that there were two cycle engines that were die cast prior to 1950. I know some of the outboard engines
401 were die cast. I cannot state specifically, I do not have any specific engine in mind. I knew of Evinrude and Johnson motors. I don't know if McCullough was made before 1950, but I knew of it before I started working on my engine which is the subject of this patent.

402 Before I started my development work which matured into the patent in suit Briggs & Stratton was making four cycle internal combustion engines. The cylinder and crankcase were made of cast iron. Sand cast as shown in the pictures. The cylinder was an integral part of the crankcase. The cylinder head was not an integral part of the cylinder. In fact, two sides of the crankcase were

Page of Transcript

also open, the magneto side and the base side. By the "base side" I mean the side opposite the cylinder. In other words, the side wall of the crankcase that held the bearing for the power take-off end of the crankshaft was solid with the cylinder, the same casting.

Q. What was the thing that caused you to move on to a different type engine?

A. We are always striving for better designs, and more specifically I was trying to make the best four cycle air cooled die cast aluminum engine that I could make,
403 that economically could be produced in production.

Q. What was wrong with the cast iron engine that you were making?

A. Nothing wrong with it. It was a good engine, and we are still making that engine.

But we wanted to keep abreast of the march of progress so that it is our regular practice to improve our products continuously.

Die casting as such was being practiced in 1938. Magneto plates on our engines were die cast. I believe in 1938
404 some of the carburetors were die cast. Many things were made of die casting before 1938.

Q. During the course of those eighteen years can you name any items that are now made of die casting that were previously made of cast iron or sand casting?

A. Yes, the base of our engine previously was sand cast, and is now die cast. There are other parts, cylinder heads and the like.

Q. Is it not true that when you got out of school in 1938 that die casting was really in its infancy?

Page of Transcript

A. No, I wouldn't say that. I think die casting goes back a long ways in our company; I couldn't say how many years.

405 I would say the practice of die casting parts that were previously made of sand casting increased down through the years since I came into the engineering field. The compelling reason why there has been this trend to die casting is that if you are constructing a product so that it can be die cast and so that it will operate satisfactorily, usually you have the advantages of being able to make the parts more economically. Die casting is a matter of economics then.

406 Q. It is the economy of die casting that compels the manufacturer to produce more and more things by die casting?

A. All parts can not be produced by die casting.

Q. That is correct, but where you can produce them by die casting, if it is a large production, it is usually more economical to produce them by die casting than sand casting, is it not?

A. I would say that it is more economical to produce them by stampings, and secondly by die casting, and thirdly by sand casting.

Q. Is it more economical to produce the engines shown in your patent as a sand casting or as a die casting?

A. Die casting.

Q. But those could be produced either way?

A. Ordinarily any part that can be die cast I believe can be sand casted.

Page of Transcript

Q. But in your patent those could be either die cast or sand cast, isn't that correct?

A. There is no point in restricting a die casting assembly to die casting because it can be sand casted.

407 Q. Is aluminum sand cast?

A. It can be, yes.

408 Mr. Hugh Brown of our company gave me a directive to work on this engine. He outlined as my project to strive to make the best four cycle air cooled engine that I knew how to make that could be die cast. Previous to that we
409 had not been able to successfully die cast engines. For years we had been wanting to make an engine in die casting, but we did not know how to do it and make one that would operate.

Q. Other engines were die casted, and you were familiar with them and they were on the market?

A. They were two cycle engines. It is an entirely different problem to die cast a two cycle engine than it is to die cast a four cycle engine.

Q. What is the difference in the problem?

A. That gets into the differences between a two cycle and a four cycle design, and it would take a long discussion, but basically you have valves, and intake, and exhaust ports on the four cycle engine and you have to get cooling around those valves and also around the block. The valve ports must be in close proximity to the cylinder block or you do not have an efficient engine. To get them into close proximity to the cylinder block it becomes very difficult to be able to cast the cylinder and keep it at temperatures where it will operate.

Page of Transcript

Q. There is no problem in making a sand casted cylinder and crankcase assembly in one casting, is there?

A. Not nearly as much a problem as die casting.

Q. It had been old for years before you ever got into
410 this development to sand cast a four cycle engine cylinder and crankcase, wasn't it?

A. Yes, sir.

These problems that I mentioned about getting the valves near the cylinder wall, and so forth, that problem was present in the cast iron engine. But the cores between the ports, so-called rib cores in the film, were destroyed in the process of getting the sand out between the fins.

Q. Your problem was a die casting problem primarily, wasn't it?

A. I did not say so. You had a combination of problems. You had a problem of making a die castable four cycle single cylinder air cooled engine that would be economical to produce and to make it in such a way that the number of variations in the cylinder crankcase casting would not be so great that we could not afford to invest the money in expensive molds necessary for the cylinder crankcase.

Q. Mr. Brown came to you and told you, "We want to make a die cast engine," is that correct?

A. Substantially.

That was my first notice that we were going to con-
411 centrate on this. I don't believe Mr. Brown told me what parts of the engine he wanted to die cast.

Q. Your patent is not concerned with whether it is die casted or sand casted or made of iron or aluminum?

A. It is concerned to the extent that it must be die castable.

Page of Transcript

Q. You think that any of the benefits you get from your engine are not obtainable unless it is die casted, is that correct?

A. I didn't say that.

412 The metal is not specified in the patent. The engine would not work if it were made of zinc, for instance. It also says that you can use sand casting instead of die casting. Many of the advantages that I attribute to my engine will be present if I make the engine out of a sand casting. Those advantages will be present if you make it out of any other metal, other than aluminum.

413 We are making more die cast engines than sand cast. Considerably more. Probably more than the ratio of three, four, or five to one.

Part of the advantages that follow from my engine are attributable to the fact that we make it of die casting. Part of the advantages are due to the fact that we make
414 it out of aluminum.

Q. You are aware of the fact that there has been a tremendous trend in American industry to die casting, is that not correct?

A. There has been quite a trend to die casting. Even though you could die cast the part, that does not say that the part will function correctly though.

Q. I am not disputing you on that, but you have more and more competition and the trend is definitely to cheaper and more economical methods of manufacturing, would you say that?

A. Certainly we are always striving for that.

And die casting is one of the methods which helps to cut the cost.

• • • •

Page of Transcript

420 [The Lechtenberg patent] shows how the slinger is used for the vertical shaft engine and how the dipper is used for the horizontal shaft engine, and if you want the engine, if you had an engine that would be run in both directions you would put both in, and we have been requested to do so by customers. As I see it, the patent
421 teaches that if you want to run this engine as a horizontal shaft engine you would have a dipper. If you want to run it as a vertical shaft engine you would have the slinger
422 gear and bracket. If you want to run it for both purposes you would put both of them in.

Q. But it would be restricted to one cover?

A. No, you can put on any variety of covers.

Q. You wouldn't want to use a cover unless —

A. There are certain covers you would not want to use, but you can put in any variety, you can put on either of the two lower covers, or both.

Q. The statement is found in Column 2, Lines 15 to 22, and it says that to convert from a horizontal shaft to a vertical shaft engine you merely change the cover, that is not the teaching of the patent, is it?

A. I would say that with the other teaching in the patent to — I can't think of the word in the patent — I think we are getting into a question of patent description, and I don't know that I am qualified for that.

Q. Point out in the patent where it tells you how to
423 convert a horizontal shaft engine to a vertical shaft engine by merely changing a cover plate. Will you show me where it says that, where it shows you how to do it in the patent?

• • • •

Page of Transcript

A. As an engineer, it looks to me like you could interchange cover 8 in Figure No. 5 with cover No. 7 of Figure 2; and there is nothing in Figure 2 that shows the slinger gear did not happen to be assembled in that engine.

Q. Where does the patent teach mounting the slinger
424 gear in both lubricating systems in one engine?

A. I don't know.

I have seen engines with the cylinder and crankcase separate and the cylinder bolted to the crankcase. I think there were about the same number made one way as another.

Q. It was common practice to make the cylinder head separate from the cylinder?

A. That again, on a four cycle engine — or two cycle engine, the cylinder head was sometimes attached to the cylinder casting. That was on two cycle engines.

It was the prior practice to make the crankcase with some of the walls removable. You had crankcases where
425 the flywheel wall, the wall adjacent to the crankcase, was removable. You had some where the wall opposite the cylinder was removable.

Q. You had some where the wall that supports the power take-off end of the crankshaft was removable, is that correct?

A. I don't specifically recall any engine made that had that wall removable, but there might have been.

Q. Were you familiar with the Lauson Sport King engine?

A. Not at that time I wasn't.

Page of Transcript

Q. You are with it now?

A. Yes, sir.

Q. Does that have a removable wall that supports the power take-off end of the crankshaft?

A. There is a cover in that wall, but I wouldn't say that the whole wall is removable. This part of the wall is — and there is an opening in the wall.

Q. How much of the wall is left — I don't want to get into a question of semantics.

A. The Exhibit No. D-78 speaks for itself. There is a
426 certain amount of wall and a certain amount of hole.

Q. So that when you say the entire wall is not removable, in this Lauson engine D-78, you refer only to that small portion which constitutes the flange around the opening of about one-eighth of an inch in width?

A. Some portion — it is around three-eighths of an inch.

Q. Would you say it is one-fourth or one-eighth of an inch?

A. I would say it is closer to one-fourth or three-eighths of an inch.

Q. To that extent the entire end wall that supports the power take-off end of the crankshaft is not removable?

A. That's right.

I disagree with Mr. Wolcott when he says that this
427 cylinder and crankcase D-78-A could be die casted. Because I think it would be impossible to make a workable engine and still be able to die cast between the intake and exhaust ports. There is an under-cut in back of the intake port between the intake port and the exhaust port, and I don't know any way to die cast that without mak-

Page of Transcript

ing a destructible core, such as plaster of Paris core, that can be used inserted into the die casting, and that certainly would not be an economical die casting method. I don't think there is any conventional die cast made that way. It is somewhat difficult to point it out on Patent No. 2,693,789, because the construction is different than on the Bosma engine. I do not believe I said that you
428 could not die cast this [Lauson cylinder and crankcase] assembly if you changed it, but in the state it is in you cannot die cast it economically.

Q. Your opinion is that you cannot die cast defendant's Exhibit D-78-A, Lauson cylinder and crankcase as it is?

A. No, not as it is. If you made a number of changes you could die cast it.

Q. Where in your patent, will you point out the differences that make your cylinder and crankcase die castable whereas the Lauson is not—you said something about the valve—I didn't understand you—one feature you said?

A. On Exhibit D-78-A there is a flange to which the carburetor is attached. This flange has an under-cut, underneath the flange and there are also fins underneath this flange attached to the barrel—and—I don't know any way you could get the die cast core out of there without making it a destructible core.

Q. You can use destructible cores in die casting?

A. I don't see any reason why you could not use a plaster of Paris core or something like that. I don't know anybody who is doing it, and I don't think it would be economical.

Page of Transcript

Q. Is there any question in your mind that you could
429 sand cast Defendant's Exhibit D-78?

A. Not at all.

Q. Where in your patent is there anything that shows how to die cast a cylinder and crankcase?

A. The engine shown in the patent can be die casted.

Q. It doesn't teach you how?

A. I think the film illustrates pretty well how it is done.

Q. Can you not respond to the question that I asked you; does your patent show you how to die cast the cylinder and crankcase?

A. If I knew nothing about die casting I don't think it would.

If you have only the wall opposite the cylinder removable you cannot assemble the engine. I don't know any
430 engines that have only that wall opposite the cylinder removable, with the two side walls more or less as you illustrate there in your hypothetical question. There were engines made with the flywheel wall removable, I believe.

Q. Was the engine assembled through the opening?

A. On the flywheel side.

Q. And the engines operated?

A. Yes.

I don't believe the Lechtenberg engine cylinder functions any differently when the flywheel wall is removable than it does when the power take-off end wall is removable.

Page of Transcript

Q. This cylinder up here that is operating it doesn't care whether the flywheel wall is removable, or the power take-off end wall is removable, does it?

A. I would say that it would not make a great deal of difference.

431 Q. It will not make any difference, Mr. Lechtenberg?

A. There are problems such as breathing that you have to lick and the like that might bother. Without actually going into the design, I couldn't say for sure.

Q. Take his own engine here — this happens to be a Clinton engine — Defendant's Exhibit D-114 — let's make this wall the removable wall. We will leave it as it is and we will take the flywheel wall and make that removable by bolting it down and securing it by bolts. Will your cylinder operate any differently?

A. No, it would be the same.

Q. It would be the same — right — if we take your engine and cast the cylinder separate from the crankcase by securing it by bolts you would not have one integral cylinder casting, but you would have two castings and I don't care whether they are sand cast or die cast, by securely bolting the cylinder to the crankcase does the cylinder function any differently in that case?

A. I would say the same.

Q. Isn't the same true that the crankcase does not care whether the cylinder is cast as a single casting with the crankcase, or whether it is made as a separate piece and bolted to the crankcase?

A. I think you have a separate cylinder. You have many problems that you do not have with an integral one.

Page of Transcript

432 Q. From the standpoint of assembly and manufacturing?

A. Also operation.

Q. What function does the cylinder perform — you said that is merely a place in which the piston moves up and down

A. That's right, but if you put a joint in between the cylinder and crankcase you have a lot of other problems.

Q. You would not have that problem if you put a liner in, would you?

A. Yes, I would think you would have a lot of problems.

Q. You would not have a joint if you had a liner?

A. Yes, if you have a liner in the cylinder and the cylinder and crankcase are a two-piece assembly you have a problem where the cylinder is fastened to the crankcase from the standpoint of the gasketed arrangement and valve chamber construction.

Q. But the cylinder still functions just the same?

A. Yes.

Q. By the same token if you made this wall, that is the power take-off end wall, we will make that integral or cast with the remainder of the crankcase, but we will have the flywheel wall removable, this cylinder does not know which of the walls is removable?

A. From the standpoint of the piston moving up and down I would say no.

Q. From any other standpoint then it would not make any difference if you made your casting with the wall removable or with this wall cast integrally?

Page of Transcript

433 A. The cylinder barrel as such would not know the difference. The engine might.

Bakke shows the opening in the power take-off side with a removable cover similar to our Model 23 cylinder, Plaintiff's Exhibit No. 20-B. This opening here is the hole in the power take-off side.

Q. You cannot change that plate 18, in Bakke, or the plate on the Exhibit that you refer to without changing the cylinder and the crankcase?

A. Yes, but if only that plate is removable you could not assemble the engine. There are other plates on that
434 engine that are removable.

Q. On your engine or Bakke's?

A. Both.

Q. Is it your contention, or your statement, or testimony that in Bakke you cannot insert the crankshaft 14 through this opening covered by the closure plate 27?

A. No, you cannot assemble the connecting rod on that engine, because you cannot get at the connecting rod screws from the back portion of the engine. The side wall opposite the cylinder, in that engine as made in the practice, had that wall open.

Q. Was the engine of Bakke actually made?

A. The Continental engines, I don't know if they are made according to Bakke's patent, but similar to that had that wall open. I think that is diagrammatic, that sketch.

* * * *

437 *The Court:* Where does the patent show which are the variables and which are the constants of the engine? I address that question to you, Mr. Lechtenberg, but if counsel knows counsel may answer.

Page of Transcript

Mr. Jones: The witness can answer.

438 A. I think it is outlined all through the patent. Let's start at Column 1, Line 81, and there it states as follows: "Heretofore the ordinary single cylinder, internal combustion engine was so designed that to adapt the same to different uses often entailed an entirely new cylinder-crankcase casting. This would rule out die casting and the obvious savings effected thereby since the cost of the dies involved would be prohibitive. By contrast, the engine of this invention is so designed that it may be adapted to a wide variety of uses without in anywise changing the cylinder-crankcase casting. Only the cover of the crankcase need be changed, and since the dies involved in the production of the cover castings are by no means as complicated and expensive as those required for the cylinder-crankcase casting, even die casting the cover unit is feasible, and for shorter runs where the cost of tooling up is not warranted, sand castings may be employed for the covers." Then it goes on to state: "To illustrate how easily the engine of this invention may be adapted to different uses, it might be noted that the adaptation of an engine intended for ordinary general utility with the engine operating in an upright fashion, that is with its cylinder vertical, to horizontal operation as in rotary type lawn mowers, merely requires the simple substitution of one cover casting for another." In other words, there again is your variables.

Q. In other words, the only constant that you have in this case is the crankcase and cylinder?

439 A. It is not the only constant in the engine. The cylinder heads and a lot of other parts are the same.

* * * *

The Court: It is clear to the Court what is meant by constants and variables. We have the illustration of the

Page of Transcript

vacuum cleaner. The operating mechanism is the constant, and if you want to put the attachments on it you put on the variables. Rightly or wrongly, the Court has not been in confusion about it. Proceed.

• • • •

442 Q. In converting from the Sport King outboard to a Power Head is the cylinder and crankcase cover, which is red and identified as Exhibit D-78-A, is that changed, the casting itself?

A. The casting itself I do not believe needs change. I don't know if I am qualified to state. I have never run it either way.

• • • •

445 Q. According to that teaching, the cylinder and crankcase of the vertical shaft engine are not constant when used on the horizontal shaft engine, is that not correct?

A. I think it is all a matter of choice and appearance, the way that we presently have the fuel tank mounted, and to save the aluminum, we remove the feet.

Q. I am restricted to the patent. I don't care what your practice is. Your patent does not teach that you have a choice, the patent does not teach that you have a choice of omitting the feet and the bosses 33 when you convert from a vertical to a horizontal.

446 A. I don't know anything in the patent that says you cannot do it.

Q. You don't know anything in the patent that says that you should do it, do you?

A. No.

Mr. Jones: We have gone all through this before.

The Court: Sustained.

Page of Transcript

Mr. Raisch: I can understand why they do not want to have that question answered. That goes to the whole argument of constants and variables. The patent teaches that when you go from a horizontal shaft engine to a vertical shaft engine, or vice versa, you make changes in the main casting, both as to the casting itself, the weight, the bosses, and the machining, is that correct?

Q. In converting to a horizontal shaft engine to a vertical shaft engine you make changes in the main casting.

Mr. Jones: Functional changes, of course not.

Witness Lechtenberg: May I answer the question?

Mr. Jones: Functional changes, of course not.

Q. How about physical changes?

Mr. Jones: You may cut a foot off.

Mr. Raisch: You do cut feet off.

447 *Mr. Jones:* I will not indulge in argument now.

The Court: It is very material what changes have to be made. We call the upper part constants. I use layman's language. I might have it clear in my mind, but it is material whether you have to make those changes, from what I know of the matter of constants. Answer the question.

A. Those bosses provide a nice place to mount the fuel tank, and, although we are not doing it that way at the present time, we have considered mounting the tank in that manner.

Q. Excluding your practice, I am not interested in that, the patent, in fact, teaches and spells out that in the

Page of Transcript

horizontal shaft engine you have the feet 32 on each side of the casting and the bosses 37, which you drill for an oil filter or outlet for it, I should say, is that correct?

A. Yes.

Q. The patent teaches that when you use the engine as a vertical shaft engine you omit feet 32 and drill bosses 33, is that correct?

A. I think that is correct.

448 *Cross Examination*

Q. Can any part that is adaptable to sand casting be also die casted?

A. No.

Sand casting requires more machining than die casts.

450 *Redirect Examination*

Q. Will you refer to your patent, Mr. Lechtenberg, and refer to Column 6, and Figure 17 of the drawing, and I will read Line 47, and I think it refers to the element 64 of Figure 17, and it says there, beginning on Line 47: "By virtue of the fact that the wall 64 is cast integrally with the crankcase-cylinder casting and joins with all of the cylinder cooling fins in the manner described, still another very important advantage is obtained, for as will be apparent to those skilled in the die casting art, a portion of the die in which the wall 64 is cast provides an excellent gate through which the molten metal may rapidly flow to quickly fill up the portions of the die in which the cylinder per se is cast. This assures the desired metal density in that portion of the casting where imperfections would be most serious." Explain that last sentence: "This assures the desired metal density

Page of Transcript

in that portion of the casting where imperfections would be most serious."

A. In die casts, many times we have a certain amount of porosity, and we usually attempt to get the most sound portions of the casting to be without porosity at the places in the casting where it is most desirable to have a sound casting, and since the cylinder bore, the valve guides, and the upper portion of the cylinder are the portions we desire to be of sound casting, I provided the gate in this
451 region or near those portions.

Q. In other words, it is important then not to have any pores or holes in the cylinder wall?

A. I would say in general, yes. You, of course, cannot have any holes in the crankcase wall either.

Q. This refers to that portion of the casting where imperfections would be most serious, that refers to the cylinder wall and the —

A. Valve ports, the guides in that portion there, that's right.

---

452 STIPULATION: The engine marked plaintiff's Exhibit number 35 may be received in evidence, and it is understood it is the first engine of the Lechtenberg patent that was completed and operated, and that it was completed in the fore part of March, 1952. It is also stipulated and agreed it is a sand casting. The engine marked plaintiff's Exhibit 36 is received in
453 evidence, and this is a commercial engine in which the variable or cover casting has been cut away except for a segment which is thought necessary to maintain the crankshaft and cam gear in assembled position, and this is a horizontal shaft engine.

Page of Transcript

Then, 36-A, the cutaway cover plate, marked 36-A, may be received in evidence, and it is the remainder of the part that is assembled to the engine 36.

As plaintiff's Exhibit 36-B the cover plate, which is labeled horizontal engine auxiliary power take-off. It is understood of course the cover plate has a segment cut out so it may be slipped off the engine. By horizontal engine we are referring to the fact that the cylinder is horizontal and the crankshaft vertical.

454 Exhibit 36-C is a gear reduction mechanical governor cover plate, which again has been cut out so as to admit its insertion on the engine Exhibit 36.

Plaintiff's Exhibit 36-D is a standard plain bearing cover which has been, as the others, cut out so as to fit on the machine.

Plaintiff's Exhibit 36-E is a plain cover — a plain bearing cover which has provision for mounting a cam or a kick-starter, and that like the others is cut away so it may be illustrated by application to the engine Exhibit 36.

Plaintiff's Exhibit 36-F is a standard horizontal engine cover plate, and horizontal has reference to the cylinder being horizontal and the shaft vertical, and that is likewise cut away — has a segment cut away.

LEO J. LECHTENBERG

Direct Examination

With reference to the first Lechtenberg engine, plaintiff's Exhibit 35, in March, 1952, it was a brand new engine which was operated as a horizontal shaft engine. In May of '52 I put the slinger gear, or had the slinger gear put in under my direction, and the vertical shaft cover was put on this engine, and it was operated as a vertical shaft engine for approximately one month. The engine Plaintiff's Exhibit 35 as it now stands has been operated by me and is today capable of operation in either horizontal or vertical position, with the crankshaft horizontal or the crankshaft vertical.

The cover shown in Exhibit 36-F is shown in figure 5 [of the Lechtenberg Patent]. And the cylinder is shown as item 4 in figure 4. So far as I know the cylinder shown in Exhibit 36 is the cylinder shown in the patent drawings of the Lechtenberg patent. Figure 3 discloses the feet, the drain plugs, and also the bosses for the horizontal slinger as shown in this casting. This exhibit 36-E is a crankcase cover for the horizontal shaft aluminum engine and is the cover shown in figure 10 of patent 2,693,789.

> *Mr. Jones:* So that the record will be clear it is understood these covers have a segment removed merely to facilitate their illustrative nature with the engine 36.

36-F is a crankcase cover for the aluminum engine and is the standard cover for that vertical shaft engine. It differs from cover 36-B, which is a cover for a vertical shaft engine, insofar that 36-B has an auxiliary drive boss so that you can have a power take-off off of the camshaft. Cover 36-A is a cover for a horizontal crankshaft

Page of Transcript

aluminum engine, and differs from cover 36-E in that it has four flange mounting bosses, is made for a ball-bearing crankshaft, and does not have the accessory mounting boss which is on 36-E, and it can be used for mounting hand or kick starters. 36-D is a crankcase cover for a horizontal shaft aluminum engine, and differs from 36-E in that it does not have the accessory mounting boss. 36-C is a cover and gear case assembly, the gear case being assembled to the cover to illustrate the manner in which this cover can be used. This cover is also designed for use with a mechanical governor, where cover No. 36-E is designed for use with an air vane governor, and designed for the flange mounting bosses on which the gear case may be mounted. In the circular disc-shaped portion on the outside of the cover Exhibit 36-C the internal gear assembly is mounted. The gear reduction running at one-sixth of the crankshaft speed. These covers 36-A to 36-F, both inclusive, are some of the
460 variables we have been talking about. But do not represent all of them.

Q. What have you to say as to whether all of the operations that were shown going down the line in that assembly of the Lechtenberg engine — that is, all of the operations shown in the movie, do they comprise all of the operations that are required and necessary to assemble the Lechtenberg engine?

A. No; naturally you have to assemble the carburetor, blower housing, and other parts. We only showed the assembling to the extent of what we thought was pertinent in this case.

In other words, the operations made were the conventional operations required of all engines. The operation was in the correct sequence as we showed it, up to

Page of Transcript

461 the point we showed them. There are operations after that. This was most of the assembly line we showed.

When Briggs & Stratton originally tooled up for the Lechtenberg engine the dies were originally made so that with an insert they would produce castings without the feet, and by removing the inserts make the feet. The first molds were made by changing one portion of the insert in the die so we could make castings either way. It is not the general practice to do it today. We have had such a demand for this engine that we have made a number of cylinder molds, and since we have a sufficient quantity of cylinder molds, and need that quantity to maintain our production, we use some of them for vertical and some of them for horizontal shaft engines. The cast-
462 ings will go down our machine line or assembly line interchangeably, with and without feet.

Q. So there may be no confusion, Mr. Lechtenberg, counsel for the defendant put in a Briggs & Stratton main casting as defendant's Exhibit D-123, and some difference was brought out in the casting as over the castings heretofore put in evidence. Will you please explain these to the Court and the reasons for them?

A. This is a recent sample of our vertical cylinders and as mentioned in previous testimony the bosses for the horizontal engine were omitted from this cylinder, and we did that to save the aluminum, since this cylinder was only going to be used as a horizontal crankshaft engine. The one I have in my hand is a horizontal crankshaft engine casting. Now, there are other changes also. The bottom that was referred to as missing from this casting, and which is normally present on a vertical shaft engine, this pocket was also omitted, since this is only a horizontal crankshaft cylinder. And this pocket

Page of Transcript

was omitted in here to simplify the mold construction, and again to save the aluminum. There is a change in
463 the breather shape and construction. By further experimentation we found this shape was more advantageous on the horizontal crankshaft engine and gave us further advantages over the baffle as shown in the Lechtenberg patent. But functionally the engine has not been changed in any manner.

Cross-Examination

36-A is shown in figure 21 in the patent. There is no
464 numeral reference. Figure 21 is designed to show the mechanical governor flange mounting cover, and that is what this cover is, ball-bearing cover. Figure 21 shows it as an external view of the cover.

36-B is not shown in my patent. Cover 36-C is not shown in my patent. I assume you mean in these figures. They are described in some of the wording, some of these covers are referred to, but not shown in the pictures or illustrations.

465 We use this cover 36-C on some engines without this gear reduction, but we showed the gear reduction unit on here because it is also used to mount the gear reduction unit. And then there is another cover that closes this gear case casting, which is the circular portion, to complete the gear case. The engine is complete though with this cover which normally fits on the engine. Exhibit 36-C is not shown in the illustration here. I would have to spend considerable time to check to see whether it is described or not.

36-D is the cover shown as item 7 on figure 3, and the portion that distinguishes it is the accessory mounting boss that shows up in that drawing. 36-F is the cover
466 shown in figure 5 of the patent.

Page of Transcript

Q. I am having a little difficulty, Mr. Lechtenberg, when you place one over the other they don't seem to fit.

A. Well, that is merely the boss we cut out for illustration purposes. Some covers are deeper than others, some bearings are longer than others. That is about the best we can illustrate that.

* * * *

468 Exhibit 36 is a horizontal shaft engine. And it is provided with a so-called oil dipper lubrication system. You have exactly the same lubricating system on this engine 36 when you use plate 36-A. And in order to mount that plate 36-A on this engine 36 we make no changes in the engine lubricating system, or any changes at all, except we use the ball-bearing on the crankshaft of that engine instead of the plain bearing. That is what this special cover is, that is the only change. We have no bearing in there at all. This cover carries a ball bearing, and the shaft is journaled in the ball bearing. The crankshaft that would use an inch size ball bearing could be used. In production we are not using the inch type
469 ball bearing, we use the metric sized bearing and we do change the size of the journal.

Q. Do you change the crankshaft then?

A. Yes, that is the size of the bearing on the crankshaft. Opening 784 against opening 875.

When you take 36-A off of this engine, plaintiff's Exhibit 36, and install plate 36-B on this engine, if you want to operate it as a horizontal shaft engine you make no changes; if you want to use it as a vertical shaft engine then you take the dipper off and put the slinger in. If you want to operate for both you put the slinger and the slinger gear in.

Page of Transcript

36-B is the one for auxiliary driving. The auxiliary drive or power take-off is off of the cam gear, in addition
470 to being off of the crankshaft, and of course you then have to change the cam gear casting. In other words you put in a different cam gear which had an extension and which serves as the drive shaft. The cam gear is exactly shown there with the exception it has an extension out through the end of the cover.

When you put on this plate Exhibit 36-C you have to make no changes in the engine Exhibit 36 except for the crankshaft again. On the end of the crankshaft we have a pinion, because this assembly is intended to be used for a gear reduction assembly. And the pinion, on the crankshaft, drives the internal gear. With this plate 36-C on the engine 36 that engine would be operated as a horizontal shaft engine.

Now, when you install this plate Exhibit 36-B on the engine Exhibit 36, you have to make no changes whatsoever.

When you install plate 36-F on the engine Exhibit 36, you make no changes whatsoever. 36-F has an acces-
471 sory mounting boss that can be used for mounting hand starters or kick starters, or some of our customers use it for other mountings. And this boss is not even on 36-D. 36-F can be assembled on the engine 36 as shown, with no changes, if you want to operate the engine as a horizontal shaft engine. If you want to operate the engine as a vertical shaft engine you put in the slinger bracket and slinger gear. If you want to operate it as both a horizontal shaft engine or as a vertical shaft engine you leave the dipper in and the slinger gear in. We are not selling any with both the slinger gear and

the dipper mounted at the present time. We have been requested to, but since we cannot supply the demand with the standard engines we have not gone into production of any of these special applications.

Q. Now, in your actual practice — when you use the engine as a vertical shaft engine isn't your machining
472 and drilling operations on the crankcase cylinder casting different than where the engine is used as a horizontal shaft engine?

A. Goes right down the same machining line.

Q. The same drilling operations?

A. The drills are there to drill the hole for the upper bearings in the crankshaft.

Q. What about the lubrication holes, are they the same?

A. I am talking about the lubrication hole for the upper bearing on a vertical shaft engine, and that hole is drilled only on vertical shaft engines — vertical crank shaft engines. Now, if the castings are made with that projection on, just as this casting shown in Exhibit No. 36, that hole would be drilled in all castings and plugged, and then can be used as either vertical or horizontal, which we have done on that engine, and did for awhile.

Now, that portion of the crankcase I am talking about is reference 163 as shown in figure 8 of the drawing of my patent, on sheet 4 of the patent, and the hole is
473 shown as No. 164.

Q. Now, the boss 163, do you put that — actually fabricate your castings on your horizontal shaft engine with that boss in it?

A. We did on the original casting, and we sold engines that way. We have since discontinued it, as I

Page of Transcript

believe I explained, because we have enough dies available it is no longer necessary to complicate the dies and waste the aluminum on that part.

Q. As I understand it you have two separate machining lines, one in which you made the crankcase and cylinder for the horizontal shaft engine, and the other for the vertical shaft engine.

A. No, that is not correct. The cylinders for the horizontal and vertical shaft engines go right down the same machining line.

Q. Well, by groups or at random?

A. We may take a hundred of one and a hundred of another, we don't mix them.

Q. You don't take them at random so the workman doesn't know what he is getting next?

A. Actually these individual molds vary, we haven't been able to make the molds accurately enough so our locking pins are absolutely correct, so consequently we keep the castings from each mold separate and try to run
474 them down the line in groups from each mold.

We don't distinguish between vertical crankshaft and horizontal, we just try to keep the cylinders for one day separate from another. We have some die-casting machines set up to produce only horizontal, and some die-casting machines set up to produce only vertical.

Q. That is on account of the difference in the two castings you are now making?

A. As a matter of choice, yes.

Q. Your film you showed didn't show the plating of the piston, did it, the chrome plating of the piston?

A. No.

Page of Transcript

Q. Do you do any chrome plating of the cylinder?

A. No, we only chrome plate the piston.

---

475 **HARRY SHORE**

Direct Examination

477 Although I am not directly associated with die-casting processes, Your Honor, my experience from 1942 on in having many contacts with manufacturing processes as visiting many engine manufacturer's facilities, and through my other experiences on engineering work during the period of 1942 onward, and in keeping abreast of the state of the art in this particular field, in my opinion I think I am able to state not necessarily the intricate processes connected with the design of a die casting but to indicate whether an item is or is not considered a casting.

In connection with the answer I am about to give it is not a determination I myself have made, it is a determination based on the terminology used in the industry that Exhibit D-114 would be considered a single casting with particular inserts in the casting. In some cases the inserts may be valve seats, valve seat guides, a cylinder liner, a bearing bushing. But these last parts that I have mentioned would be considered inserts and would
478 still not cause the main member to be considered other than a single casting. Upon examination it appears that the casting itself was formed around the cylinder liner, which is a practice accomplished by several manufacturers. McCullough Motors made it on one of their high production die-casting units. It is quite common, it is not a rarity.

Page of Transcript

Q. Would that liner be an integral part of the casting?

A. Well, it would be rather difficult to extricate without damaging the aluminum housing.

Q. Then you consider it one and the same?

A. Yes sir.

HAROLD E. BRUNS

Direct Examination

480 Exhibit 38 and its components 38-A, 38-B, 38-C, and 38-D, is an engine that was produced by the Lauson Motor Company while I was connected with that company. That was produced after the Lauson Power Head
482 and Sport King. 37-A and 37-B are Lauson products.
483 And they are the mainstay of the business today of the Lauson Engine Company. They are being produced concurrently with the Model RSV 800, Exhibit 38.

Cross-Examination

The Lauson Division started to make the RSV 800 engine, Exhibit 38, in 1951. At that time we had discontinued manufacturing the Sport King engine. We were not tooled up for large-scale or mass production of the Sport King and Power Head engines which are here as defendant's Exhibits 78 and -9. We proceeded to the RSV 800 particularly as a vertical shaft engine because we were quite adequately tooled on that particular iron engine. And that was the reason we proceeded to
487 manufacture that Exhibit 38.

In the Lauson engine plaintiff's Exhibit 37, we use a cast-iron liner in this cylinder.

Q. So that your crankcase and cylinder is not a single casting, is it?

A. That's right.

Page of Transcript

485 Q. I show you a piece which has been identified as defendant's Exhibit D-79, you I think testified previously that this is the oil reservoir base plate for the power head engine.

A. Yes.

Q. Do you find that counterpart of this circular boss in that base plate?

A. Yes, there is a similar boss there through which the crankshaft passes in this plate.

That boss has a couple of functions. One function was to keep the oil which was in the reservoir from running out along the shaft. In other words, the boss is
486 substantially the same height as the oil filler plug, and the secondary function is it carried a cage for the oil seal on the crankshaft. This cylindrical boss that sticks up from the bottom of this plate 37-B completes those two functions also.

Now, in the Sport King and power head, this crankcase and cylinder was a single cast-iron casting in the single piece casting. Whereas in the light weight version there we have aluminum die casting incorporating a separate cylinder sleeve casting of cast iron.

At the present time we do not manufacture any other plates than 37-B, such as shown here, that fit onto the bottom of this main casting.

---

487 HUGH S. BROWN

Direct Examination

I am the same Hugh S. Brown who testified in this action. I read the deposition given by Mr. Harold E. Bruns, and that portion of his testimony that has to do with the conferences held in Milwaukee, December 10,

Page of Transcript

488 1954. It was held at the request of Mr. Holtzman, who is president of the Hart-Carter Company, who owns and controls it, at New Holstein, Wisconsin — or at least they did at that time. Present at the conference were Mr. Holzman of Hart-Carter, Mr. Bruns of Lauson, Mr. Coughlin of Briggs & Stratton, E. B. Oehler of Briggs
489 & Stratton, Mr. Ira Milton Jones, and myself H. S. Brown. And this Mr. Bruns I have mentioned is the one that just left the stand.

At that conference Mr. Holzman sought a license under the Lechtenberg patents herein at suit, and a royalty fee was arrived at. Also at that conference it was brought out that the Lauson Company had some patents that were in the patent office at that time, and also some patents that had already been issued, that he thought would be of value to the Briggs & Stratton Corporation. And said that he would send us those patents so we could look them over and see whether they could be used to partially reduce the royalty. We received those patents after the conference, through Mr. Jones, and they were studied and examined several times. After — this went on for I don't know just how long, probably two or three months, and then in view of the present litigation all of that matter was held in abeyance. It was the decision of several people to hold it in abeyance and people that attended the conference.

490 *Cross Examination*

Mr. Holzman called — I believe called Mr. Jones in Peoria, and that is the way this meeting was arranged.

Mr. Jones: So there will be no question, I had sent the Lauson Company a notice of infringement

Page of Transcript

as I had also sent a similar notice to the Clinton Company, and that precipitated the conference.

We will concede [Briggs & Stratton] are much larger than Lauson.

491 *The Witness:* I wouldn't want to say we dominate the small engine field. I know of no one in our field that out-sells us.

Mr. Jones: We will admit that, Your Honor.

Q. You have held that enviable position for a good many years, even before the advent of the Lechtenberg patent?

A. I would say so.

We have been a leader for a long time, I couldn't say how long. Lauson was a comparatively small company at that time.

Lauson did not have counsel at that meeting. We had our counsel present. There was an agreement arrived at on the —. No, it was not finalized, if you mean that a contract was drawn and all of that, I wouldn't say it was finalized. We settled on the amount of the
494 royalty. When you are talking of the legal I don't know what you mean by contracts. I would say that the royalty or amount of the royalty was stated, Mr. Raisch Now, what that means other than that I cannot say.

Q. In other words, there was no binding agreement ever made whereby Lauson bought a license under the Lechtenberg patent in suit?

A. I don't know what you mean by binding agreement. To me that means a contract written, signed and sealed.

Page of Transcript

Q. Was there any signed?

A. No, there were no contracts written and signed.

And Lauson is not paying Briggs & Stratton any royalty on the Lechtenberg patent.

Q. What was the name of the Briggs of Briggs & Stratton, how did they get the name Briggs & Stratton?

A. It was Mr. Steven Briggs. He is still alive.

495 Q. Is he a stockholder of Briggs & Stratton?

A. I am not sure at the present time, but if he is it is a very small number of shares.

Q. Are his family or relatives stockholders?

A. I woudn't know for sure, but I believe they are.

Q. I was informed that the Briggs family own about twelve percent of the Briggs & Stratton.

A. Oh no.

Mr. Jones: Nothing like that, I can assure you.

Q. What is Mr. Briggs present job with the company?

A. He has no relation with the Briggs & Stratton.

Q. What is his present job?

A. He is Chairman of the Board of Outboard Marine Manufacturing Company.

Q. And a large stockholder, isn't he, too?

A. I imagine so, I don't know that for a fact.

Mr. Conover, of the Conover patent, is Chief Engineer
496 of the Outboard Marine Company. I had occasion to talk with Mr. Conover recently about the patent that was brought up here this morning, I don't remember the number.

Redirect Examination

Q. In other words, when this conference with Mr. Holzman and Mr. Bruns was concluded we left those gentlemen agreeing to a contract, isn't that right?

A. That's the way I understood it.

---

498 DEPOSITION OF WARREN C. CONOVER

Direct Examination

Name, Warren C. Conover; age, forty-four; residence, Waukegan, Illinois. Occupation, Chief Engineer, Outboard Marine & Manufacturing Company. Chief Engineer of Outboard Marine about six years. I have been
499 with Outboard Marine since the corporation was formed in 1936. I was Chief Engineer of Johnson Motors from 1936 until becoming Chief Engineer of Outboard Marine. My experience has been with the engineering of outboard engines all during that time. Johnson Motors was a Division of Outboard Marine.

I am the patentee of the patent to W. C. Conover, No. 2,227,247, which has been marked for identification as Conover, Exhibit No. 1. That patent relates to two-
500 cycle outboard engines, water cooled. The production method contemplated for the engine shown in this patent was die cast aluminum. At the time that I filed my application for this patent, I knew of two-cycle engines which had been die cast. I did not know of any water-cooled, two-cycle engine which had been die cast. The
501 beginning of the work was all with a single cylinder engine. The two-cylinder engine came later. We were interested in commercializing both. Figures 17 and 18 of the patent show a single cylinder engine.

Page of Transcript

The engine shown in Figures 17 and 18 was never actually constructed. In the process of preliminary design work on a die cast engine, several free-hand pencil sketches were made showing possible uses and applications of the die cast principles to two-cycle outboard engines. The Figures 17 and 18 represent one of those sketches. This design was not pursued to any extent. It
502 was not developed beyond the stage shown in the patent. It was set aside and another design was selected for production use, as represented on Sheet 3 and Sheet 4 of the patent. The information supplied to my patent attorney that evolved into Figures 17 and 18 of the patent, it is my recollection, was supplied in much the same form as shown in the patent. Figures 17 and 18 would need considerable development before it would be a workable engine, as some of the principal parts have been omitted. Among these parts would be the carburetor. All sketches of this type usually require additional development before they would make a satisfactory engine. The other figures in the patent, other than 17 and 18, were workable engines, and were produced in production quan-
503 tities. The figures 17 and 18 are incomplete as far as showing details of construction, and therefore probably could not be cast exactly as it is shown. Additional development would be required to insure that it could be cast.

We were in the business of making four-cycle engines up until 1946. By "We", I mean Johnson Motor Division of Outboard Marine and Manufacturing. And that was during the period that I was their Chief Engineer.

As to the comparative problems involved in the design of two-cycle and four-cycle engines, they have quite dif-
504 ferent problems. The four-cycle engine has a valving

problem, oil in the crankcase, both of which are absent in two-cycle engines. Both types of engines present certain design problems which are peculiar to themselves.

Cross Examination

In 1939 and in 1940, when my Patent No. 2,227,247 was being processed, my Company was making four-cycle engines; it was also making two-cycle engines at the time. My Company discontinued the manufacture of four-cycle engines in 1946. Since that time (1946) my Company has not produced four-cycle engines, as a complete engine. We still make parts for service of the engines that were made previous to that time. The four-cycle engines that the Company produced were general purpose engines, for applications up to 1½ H.P., such as washing machines, scooters, generators, miscellaneous applications for small industrial power units. The two-cycle engines that our Company made at the time we were making the four-cycle engines were entirely for outboard motors. And since we have discontinued the manufacture of the four-cycle engines, we manufacture two-cycle engines for lawn mowers, and principally in this country. In Canada we have a two-cycle engine that is used for washing machines and other industrial applications. The two-cycle engines that our Company makes for lawn mowers are used for rotary lawn mowers in this country. In Canada we do make some for reel mowers.

Q. Now, if I understood you correctly, you did say that your Company had produced some of the engines which are disclosed in your Patent No. 2,227,247, particularly those on pages 3 and 4; is that correct?

A. It goes beyond that. We produced the engine shown on Sheets 1, 2, 3, and 4.

Page of Transcript

Q. Beginning when were those engines produced by your Company? Would it have been before the War or since the War?

A. Yes, it's prior to the War.

Q. Are you still producing any of these engines?

A. Not in the same form they are now. They have been redesigned.

Q. Were those engines produced in any substantial quantities at that time; that is, before the War?

A. Yes.

• • • •

508 Q. Do you know why it was that your Company discontinued the manufacture of four-cycle engines in 1946?

A. I'm not well acquainted with the management decisions in this case, but it is my understanding that the competitive situation left too small a margin of profit.

Q. For the four-cycle engine?

A. Yes.

Q. So the company concentrated its activities then on the two-cycle engine; is that right?

A. That's right.

Q. Do you have any opinion on the merits of a two-cycle versus a four-cycle engine for use on rotary lawn motors?

A. The answer would be yes.

Q. Would you care to express your opinion.

A. It gets highly technical, and it would take considerable time to cover it.

509 Q. Well, I don't think we need a technical discussion. I think the question could be answered, if you wished

age of
ranscript

to answer it, by a rather brief statement as to whether you consider that a two-cycle engine may or may not be as desirable as a four-cycle engine for use on rotary lawn motors.

A. Well, I think that the two-cycle engine is superior to the four-cycle engine for rotary lawn mower applications.

* * * *

511 Q. In your testimony about Figures 17 and 18 of your patent, you stated, I believe, that the drawings there shown were incomplete. Did you intend to leave the impression that the structure disclosed in Figures 17 and 18 was inoperative?

A. Yes. Yes, the sketch as shown would be inoperative.

As it is shown in the sketch, it would be completely inoperative and unworkable. It had never been developed. To take a rough idea of this kind and reduce it to practice and make it operative would take more development, additional work, than has been put on this preliminary
512 sketch. It has never been reduced to practice, if that clarifies the point. I didn't say it would be unworkable design. As shown it would be inoperative.

Q. Because it is incomplete?

A. Incomplete, that's right.

Q. Now would there be anything more involved in completing that engine than the skill of a good engineer?

A. That covers a lot of ground.

Q. Well, you have disclosed this Figure 17 and 18 in your patent. Would you as an engineer say that you could not complete the design of that engine and produce it?

Page of Transcript

A. I don't believe I could answer that question without actually going through it, performing that operation. Many sketches present ideas that might look fine in the beginning and, as you develop them, present problems that are not solved.

Q. You can see a lot of problems to this Figure 17 and 18 now?

A. It appears to be.

* * * * *

515 A two-cycle engine has quite a different kind of a valve than you have in a four-cycle engine. Some two-cycle engines use other kinds of valve arrangements for controlling the flow of gas into and out of the cylinder than the kind I have just referred to.

Q. So in talking about valving problems in connection with a four-cycle engine, you didn't intend to leave the impression that there were no valving problems in a two-cycle engine, but rather, if I understand you correctly, that different kind of valves are employed, and the problems are different; is that right?

A. I think that was pretty much covered in my original answer.

516 The problem is different in both two-cycle and four-cycle. The valves that go in a four-cycle engine present a problem, and the two-cycle engine does not have the same kind of valves.

Q. I understand that, but when you talk about a valving problem, you are talking about two different things. Are you saying that the valving of a two-cycle engine is no problem at all?

A. Very slight as compared to four-cycle.

* * * * *

Page of Transcript

517 Q. Were the two-cycle engines that your Company produced for use on rotary lawn mowers made by die casting techniques, with particular reference to the main housing parts?

A. The engine is die cast.

• • • •

518 Q. I was talking about two-cycle engines for use on rotary lawn mowers since 1946.

A. Yes, they were all die cast.

Mr. S. F. Briggs is the Chairman of the Board of my Company. I personally know of no business relations with Briggs & Stratton. If there are, it's beyond my knowledge. There are no patent license agreements between the two companies that I am acquainted with.

519 I have no knowledge of a two-cycle engine of Briggs & Stratton.

Q. Were you subpoenaed to testify in connection with this matter?

A. No.

Q. You appeared voluntarily; is that right?

A. That's right.

JOSEPH ROBERT HARKNESS

Direct Examination

I am the same Mr. Harkness who testified previously in this case.

This object which has been marked for identification
520 as plaintiff's Exhibit 39 is a model of the Vansickle engine which has been referred to here a number of times. I supervised its construction. And it was made under my direct supervision.

Page of Transcript

I first had the drawings of the Vansickle patent figures enlarged to give a bore of 4 inches, and then took the enlarged prints to a model maker and then he constructed the model directly from the prints. Those were photographic enlargements from the actual patent drawings. I knew that engines of the period of the Vansickle design were quite large. They were large in area to produce any sizeable power at the low speeds involved or used at that time. However, I didn't wish to make the model
521 so large that it would be unwieldy and difficult to bring here. Therefore, I settled on four inches as a reasonable compromise between the probable size of the engine and something we could use here. It so happened that after the figures were enlarged to give the four inch bore, in checking the size, for example the cylinder of the engine, the crank pin and main bearings, I determined that would get it on even fractions of an inch, indicating that the original size of the engine was either the size shown here or some multiple of it.

I did estimate very roughly what the horsepower of a Vansickle engine of this size would be. I arrived at an answer of approximately two horsepower. That horsepower is of the same order as the horsepower of the Briggs & Stratton Lechtenberg engine of the type involved in this suit and which is exemplified by plaintiff's
522 Exhibit 36. Exhibit No. 36 is our Model 6 engine, which is rated at two horsepower.

• • • •

524 In order to keep the model relatively simple the water passages were not cored in the model, nor were the rings made on the pistons. Also the governor mechanism, the fuel pump mechanism, which would have been over here, at the flywheel side of the crankcase. Also the intake or

scavenging head coring in the large diameter section of the cylinder was not cored. I now remove cylinder head 18, in which the water cooling coring 34 was not produced. Completing the engine there, rotating the crankshaft the motion of the piston can be observed.

525 The wall of the crankcase on the side opposite from the flywheel in this model is made up of the cover, part 15 of sheet 1, and also an inwardly projecting flange, which is part of the main crankcase and cylinder casting. This flange can be observed in that view which hides my hand when my hand is put inside the crankcase. The parting line between the removed element 15 of the patent and the remainder of the crankcase wall is not actually a parting line, but it is a complex parting surface and can be seen on the cover 15. The parting is made up of a plain surface and a cylindrical surface, both of which are in conjunction or in contact with each other when the cover is installed on the engine.

Cross Examination

527 I was first interested in gasoline engines as soon as I was aware of them. Approximately thirty years ago. The size of engines for practical horsepower has continually decreased during that period. I attribute that continuous decrease in size of engines for the same horsepower to many factors. Well, rotational speed, high-compression ratios, better fuels, better combustion chamber shapes,
528 high-compression pressure, better scavenging, better lubrication. Better alloys from the strength standpoint. In other words, there are a lot of advances that have been made in the metals and fuels and allied fields that are taken advantage of today and were taken advantage of by Lechtenberg when he made the patent in suit.

Page of Transcript

This portion of the model Exhibit 39, which is shown in the drawing as No. 15, is a cover.

Q. You also admit it is a bearing for the power take-
529 off end of the crankshaft?

A. I admit it has a bearing.

Q. But you don't admit this is the power take-off end?

A. I couldn't confirm it.

Q. Have you—will you look at Fig. 1 of the—of the drawing of Vansickle. On the right hand side you will notice a jagged line that designates that the shaft is cut off, doesn't it?

A. Or broken off, yes.

* * * *

When you have a broken line at the end of a shaft that means that some part has been left off, perhaps a flywheel or extension shaft or something of that type has been left off. I wouldn't conclude from that that was the power take-off end of the shaft.

Q. You wouldn't? What would you think would be the purpose of having that shaft sticking away out here—to that extent your model is not faithful, is it, its end of the shaft is not broken, it is finished to indicate an end, isn't it?

530 A. That is correct.

Q. We don't know how far this shaft extends out, do we?

A. No, we do not.

Q. Now, why do you have any question in your mind this is the power take-off end of that shaft?

A. Well, at the time that these engines were used much of the power take-off from the engine was by a

Page of Transcript

flat belt around the flywheel. In which case I would say that the flywheel shown here may very well have been the power take-off end of the shaft.

Q. The patent doesn't say so, does it?

A. I don't recall it, no.

Q. Would you look at it or take my word for it that it doesn't, or you can have your counsel advise you and we will proceed.

Mr. Jones: My recollection is the patent is silent as to the power take-off end of the shaft.

Q. That's right, your statement that the power take-off is at the flywheel is speculative.

A. Did I say it was or could be; I am not sure.

Q. When you say could be, that is purely speculative?

A. No, it isn't, it might have been.

Q. But the patent does not say so. Will you say why
531 they would want to extend that shaft on further, as indicated by the broken line in the drawing?

A. Perhaps for a water pump, to take care of the cooling agent.

I would consider the pump a normal operating part of the engine. The power supplied by the bottom of the piston in drawing gas into the crankcase is a normal requirement of the engine.

532 I will admit that power might have been taken off of the non-flywheel end of the shaft.

Q. Now, if you take this flywheel off, can you pull out the shaft?

A. You would have to also remove the connecting rod.

Page of Transcript

You can reach the connecting rod through this opening in this wall.

This model represents the cylinder and the crankcase except for the cover here, No. 15 in that patent, as a single casting.

The purpose of this base with four holes is to mount it on a pedestal, for example, fasten it down to whatever supports it. That is the same function as this base des-
533 ignated 32, the four holes in the bottom of the Briggs & Stratton engine which is Exhibit 36. In other words, except for size this base on the model here with the four holes in it is comparable to the base with the four holes in it in this Exhibit 36.

Q. Now, you talked about the parting line. This cover certainly has a parting line connection with the opening in the base—in the side wall of the crankshaft, doesn't it?

A. No, as a solid body they have a parting surface.

A parting line as shown on a drawing is actually a line because the drawing is two-dimensional. A drawing is a two-dimensional elevation usually of a three-dimensional object. And as such a plane is generally shown as a line on that part, consequently it is commonly
534 called a parting line, because it is a line.

This crankcase cover here, 15, parts from the crankcase casting. And this portion, which is the round portion, cylindrical portion, that is coaxial with the crankshaft — that makes a surface contact with the inside of this opening in the side wall of the crankcase. So there is a parting surface between the cover plate and this crankcase.

Page of Transcript

Q. Now, if this element 15 is not the cover to cover this hole through which you may remove the crankshaft, what would you characterize this as?

A. I characterize it as a cover.

And the cover has a bearing in it which supports one end of the crankshaft. Then my position is, this is a cover in what might become the power take-off end of the crankcase but does not complete the wall of that crankcase. • • • •

537 *The Court:* • • • The Vansickle patent is more than a half century old, we are trying to bring something forward nearly sixty years, which presents a good many problems.

---

538 ERNEST A. LONGENECKER

Direct Examination

Ernest A Longenecker, age 60. 411 South Higby Street, Jackson, Michigan. Occupation industrial consultant. Graduate engineer, mechanical engineer from the University of Wisconsin with a BS degree. Postgraduate work credits in engine design and industrial engineering. 1917 to 1919, United States Army. Engine mechanic in the Aviation Section, Signal Corps, which later became the Air Corps. I went in as an enlisted man, final rank of Major. I was in the Army from 1917 to 1919, then I was in the Organized Reserve after that. And at all times primarily concerned with engines and aircraft. Following graduation I taught Thermodynamics at the University of Wisconsin. That deals with heat, power engineering, engine design, and utilization of heat as fuel for operating the prime mover. Following that I worked with the Assistant Chief of Tool Designing for Fairbanks Morse & Company at Beloit, Wis-

consin, who manufacture a complete line of industrial and marine diesel engines, and who at that time manufactured a line of industrial and farm gasoline engines. I left Fairbanks Morse in 1926. For two years I was plant superintendent for the American Lacepaper Company in Milwaukee. Following that I was Foreman of the assembling and tests for Leroi Company who manufactured a complete line of small—down to six horse—and large gasoline engines, and a line of air compressors.
541 Following that for seven years I was Industrial Engineer for the Charles A. Krause Milling Company. Following that from late '39 until about sometime in December of '47 I was President of the Lauson Company at New Holstein, Wisconsin, going there as Executive Vice President and becoming President shortly thereafter. That is the Lauson Company at New Holstein that manufactures gasoline engines. I went from Lauson to Leroi Company where I had formerly been employed, this time as President and General Manager of their Milwaukee plant. Their plant in Cleveland, Ohio, makes air tools, and their plant in Cambridge, Ohio, make tractors. I was there until 1950, July. For a period of about a year I was Industrial Consultant. One of the accounts I was serving at that time was the Jacobson Manufacturing Company at Racine, Wisconsin. In August, 1951, they asked me to become
542 their Plant Manager. I was Plant Manager there until about the middle of '53. Jacobson manufactures a rather complete line of power lawn mowers, and in making this line of mowers they build their own two-cycle engines. At the time I went there it was primarily for the purpose of developing a four-cycle air-cooled engine to complement their line. I left Jacobson and went to Yardman — Yardman makes a complete line of hand and

Page of Transcript

power lawn mowers and is located in Jackson, Michigan. I was there until December of 1954-'55.

543 Q. Now, you testified you were the President of Lauson at the time which these engines Exhibit 33-A, 33-B, 34-A and 34-B were being made there, is that correct?

A. That is correct.

There was a very great demand for a light weight four-cycle engine during World War II. During that period
544 we at Lauson made quite a few thousand engines with cast aluminum crankcases and cylinders for the Air Corps, the Chemical Warfare, and some of the other services. Those were sand cast. Four-cycle. Among the exhibits before me the cylinder and crankcase casting on Plaintiff's Exhibit 38 is similar to the aluminum wartime engine that was made by Lauson, about which I just testified. It was similar in respect to its body casting.
545 At that time most of them were sand cast aluminum. It might have been possible to die cast the cylinder and crankcase body of that light weight aluminum engine that Lauson made during World War II. I think it could have been done. There would have to have been
546 design changes. I don't believe they would have been too difficult to make. Those were very much more expensive than the sand cast [iron] engines. There was a high rate of scrap. And the price was in the neighborhood of two and a half to three times as great as the standard engine. About $76.

Following the war we were able to sell our entire production and at somewhat greater prices usually than competition. Part of the reasons we used in selling to our customers that we were charging additional prices

Page of Transcript

was light weight, castings were lighter than competition for the power developed.

Q. About how much lighter?

A. As I recall, without checking, it was the difference of between 28 pounds and 34 to 35 pounds.

Q. Rather small amount then?

A. Yes, it is important though in certain applications.

Q. Now, during his deposition at New Holstein, Mr.
547 Bruns testified that it would have been possible to die cast the cylinder-crankcase body of the Sport King outboard engine—and that is the engine of which plaintiff's Exhibit 34-A is a specimen—that it would have been possible to die cast this cylinder-crankcase body plaintiff's Exhibit 34-A.

* * * *

A. Yes, I think it could have been done. It would have presented the same problems such as loose cores on the interior and possibly trouble around the port. It would have been more expensive than to have made it the way we made it, I think it would have cost more, the production cycle would have been slowed down.

548 The designing of the Sport King was partly completed when I went to Lauson, but no production models had been made. We did get the engine into production early in 1940 in limited quantities, and in greater quantities in the following years.

549 Q. Now, just how closely similar was this wartime aluminum engine of Lauson's to the cylinder and crankcase body of the engine Plaintiff's Exhibit 38?

A. As far as the cylinder and crankcase is concerned the layman wouldn't be able to distinguish the difference without close examination.

Page of Transcript

It would have been very much easier to die cast that wartime aluminum engine, similar to Plaintiff's Exhibit 38, so far as the cylinder and crankcase body is concerned, than the Sport King engine. The bearing plate and the sump of the Sport King engine was not made in one piece; it was made in two pieces because that was the only way we knew to make it so we could remove it. See, the oil pump and the pump plunger—the barrel and plunger lay in the cavity between the bearing journal plate and the oil sump. The oil sump is the portion designated as plaintiff's Exhibit 34-B. And the bearing
550 retainer plate is attached to the crankcase Plaintiff's Exhibit 34-A.

Q. Now, would you like to have been able to make those two parts, the bearing retainer plate and the sump, in one piece?

A. It would have been wonderful because we would have been able to save forty-five to fifty cents if we had been able to do that.

The bearing supporting plate on the Sport King engine (again referring to plaintiff's Exhibit 34-A) performs a dual function. It carries the bearing for the camshaft and also the bearing for the crankshaft. It also completes the reservoir which holds the oil when the engine or outboard is laid on its side, as would be done in transporting. The oil was not retained in the crankcase portion of this engine. After being pumped up to the engine it drains back down into the oil sump, that portion plaintiff's Exhibit 34-B. That was a very special
551 arrangement made in order to adapt the four-cycle for outboard use.

Page of Transcript

Q. Now, could that engine have been used as a horizontal shaft engine? And by that engine I am referring to the Lauson Sport King.

A. Very definitely not.

Q. Why are you so definite?

A. Had we had that in mind it would have been designed entirely different. In fact I could not conceive of a design any worse than that design for use as a horizontal shaft engine.

The reason is that the engine as it is designed has a very compact crankcase and the oil is all carried outside of that crankcase in a position which could very easily have resulted in stripping the engine of oil after it runs and goes back into the crankcase. You would eventually get no oil and the oil pump would not dip down in the horizontal position to make it possible to lubricate that. This discussion is all with reference to running the Sport King in the horizontal crankshaft position.

552 I was with Lauson at the time this Power Head engine was put into production. A man by the name of Belden, as I remember, was looking for a four-cycle engine to use on a rotary lawn mower which he had designed. He was looking for an engine where he could have the crankshaft vertical, and this was the closest thing he could find to that. And it had a somewhat streamlined appearance, so he persuaded us to sell him some engines.

Q. What do you mean, he persuaded us?

A. Well, this engine as originally made had no governor, and the first ones that we sold were without a governor and also without very much of a guarantee, because we explained it would be possible for a person

Page of Transcript

to overspeed the engine, and that did happen after a short time, and we did finally work out an air vane governor which was put into the job for the rest of the engines we sold for that purpose.

Q. Why was he so eager to buy this engine in spite of the guarantee?

A. Well, probably couldn't find any engine anywhere
553 else that would seem to meet his requirements.

Mr. Raisch: Do you state that of your own knowledge, Mr. Longenecker, or are you just speculating? I want it to appear in the record.

A. I know of no other engine at the time that had a vertical crankshaft in the four-cycle.

Now, after the Sport King and the Power Head engine had been put into production by Lauson—I don't recall whether this was just before the war or just afterwards—we made some vertical shaft engines, using the crankcase on plaintiff's Exhibit 38, for a rotary lawn mower application. Also during the war we designed a completely new engine, about three horsepower, for a military application; this one also in aluminum and following the same conventional design as in this Exhibit 38.

Q. That is, the engines that you designed after the Sport King were what were considered conventional engines at that time?

A. The conventional Lauson design with the valve
554 on the flywheel side of the engine. We also put into production a three horsepower engine, as I remember, Model TAC, following essentially the same design. About the only difference between the cylinder and

Page of Transcript

crankcase design of those Model TAC engines and that of plaintiff's Exhibit 38 was that in the three horsepower [TAC] there were two separate valves to actuate the cam for the intake and exhaust valves, while in the original design they had one cam which operated the two valves.

A casting is an object which is made by filling a mold with material in a non-solid state, which on hardening changes its structure or composition and reproduces in its dimensions the shape or sizes or contours imposed on it by the mold. And sometimes in addition to the molten or non-solid material that is put into the mold, some sort of solid insert is used.

Q. Now, if that insert becomes a part of the material that was put into the mold in non-solid state, what have you to say as to whether or not the result of the product is a casting?

555 A. Well, if I do it I would like to reduce this to a simple — this whole thing has been very complicated in this discussion. I would like to reduce it to a simple term. My wife at times makes a cake and puts raisins in it, the raisins become an integral part of the cake. When I ask for the cake, I don't say, please give me some cake and some raisins, I say, pass me a piece of cake. I think the same thing applies to a casting. If you have an insert in the casting it becomes part of the casting, it is not a casting and an insert. As regards the value of one kind or the other, some people like cake with raisins, some people like castings with inserts.

Both two-cycle and four-cycle engines burn gases. There are many points of similarity and many points of differences. There have been many textbooks written

on this whole subject. • • • There are some very fundamental differences, and normally the expert in one field does not even attempt to qualify as an expert in
556 the other. In the two-cycle engine they depend on a mixture of oil and the gasoline, and you consider the inside of this room as a cylinder and have somebody outside with a spray gun try to spray through the window, that is the way you oil the cylinder wall. You fill the complete piston chamber with oil and gas mixture in the hope of getting a little bit on the walls. On the four-cycle engine the oil is in the crankcase and the gas is in the gasoline tank. There is another fundamental difference of course between the two- and four-cycle engines, is that the piston on the two-stroke engine delivers the power stroke every time it goes down. At the same time it goes down it compresses a charge of air and fuel in the crankcase below the piston. And as the piston goes far enough down it uncovers a port, which forces this combustible mixture up and over the top of the piston, and at the same time the piston uncovers the port which allows the burning charge, or burned charge, or burned gases to escape. The hope and dream of all two-cycle
557 people is they can get complete discharge of burned gases and complete intake of unburned gas without too much of a mixture. It is a very difficult thing to do.

The problem of residual burned gases in the four-cycle engine is tremendously less severe. The four-cycle engine has a complete movement of the piston forcing the burned gases out through the exhaust valve, and the only gases remaining in the cylinder head is distributed between the cylinder head and the top of the piston.

Page of Transcript

Q. Are the valves in a four-cycle engine anything like the ports in two-cycle engines?

A. They produce —they try to perform the same function but design-wise and the problems connected with them are entirely different.

On the four-cycle engine you have a problem of pushing the burned or burning gasses out past an exhaust valve which becomes incandescent in its operation. There is a very severe problem of valve seats and valves as regards burning, especially there is some of the leaded fuels where deposits of lead accumulate between the valve and the seat and tend to hold the valve open, causing the valve to do what they call wire draw, giving a crevice between the valve and the seat. You have another problem on a certain kind of fuels like some of the synthetic fuels where you doctor them up with lead, where you have an accumulation of gum around the intake valve stem. You have to have a valve of the right size between the stem and the guide to prevent oil from being pulled up the valve stem. At the same time you have another problem of the exhaust valve which runs very dry by lack of lubrication and it runs very hot. The big problem on any four-cycle engine, especially air-cooled, is that little triangular area that lies between the intake and the exhaust valve and the edge of the cylinder bore. That is a spot that is hard to cool. We have run tests on engines where we put a thermocouple lead in that spot and find the temperature at that point will run higher than 990 degrees — above red heat. On the opposite side at the intake valve it might run as low as 180 degrees. Which would mean that the intake valve being unevenly heated does not stay round any more. You have to design to take care of all of these problems.

Page of Transcript

Q. Now, is there any part of the engine which presents peculiar cooling problems in the two-cycle engine,
559 as opposed to the four-cycle engine, or vice versa.

A. The two and four-cycle are entirely different. They have not been too acute on the two-cycle developed motor where they use water, but on the two-cycle air-cooled it is quite a problem because you have a power stroke every time the piston goes down, so in fact you have a burning fire in that cylinder at least half the time. On the four-stroke cycle it is only one-fourth of the time. Also on the two stroke engines you hope that you can keep the heat from running through the piston and igniting the gas under the piston, which has been compressed, because it decreases the volume and torque function of the engine. You don't draw as much charge into the crankcase. In the four stroke cycle you design to provide for a great part of the heat to be carried off by the oil, which splashes against the bottom of the piston or communicates through the rings to the walls. So your cooling problems are entirely different. There is two entirely different types of engines.

Production-wise the two-cycle is tremendously much less expensive to tool up for. Less parts, less inventory,
560 less assembly operations. In fact unless you go to elaborate tooling you can tool a two-cycle engine at the same price as tooling for the crankcase of the four-cycle.

The fact that the two-cycle engine does not have oil as such — it has it in vapor form — makes it possible to use the two-cycle engine in most any position you can get the carburetor to function. That is one reason they use them in chain saws so extensively.

Page of Transcript

In designing any engine you have to provide for carrying off a certain percent of the heat. The reason is, you must keep the temperature of the metal parts where the oil is functioning below the point where the oil will char. With the water-cooling engines it is quite simple to take the heat away through the water. With the air-cooled engine the problem is much more acute, because you have not only the difference in air pressure but you have the difference in the effectiveness of the fan
561 at different speeds. There are certain speeds at which you idle the engine where you don't get the air around where it should go. It has to be more carefully studied out. I have known of poor air-cooled engines which were not successful due to improper spacing of the cylinder bores, and so forth, which by converting to water-cooling was a very successful engine. In other words, you have to space your cylinders, get your air through not only on the side the fan is blowing from but you have to bring it around to the reverse side.

Q. Well, to reverse your answer and put it into the form of my question, I understand that merely because an engine is a good water-cooled engine does not mean it is adapted to air-cooling.

A. No, not whatever.

I made it a practice to buy every text or every book that has been published that came to my knowledge on engines or on the manufacturing of engines. I belong to the American Society of Mechanical — or Automotive Engineers. I attend every meeting where sessions are given, that I can, where topics of interest to me are being discussed. If I can, I get the transactions and

Page of Transcript

read them and study them. I also have read the bound — wherever possible get copies of any patents which may have been issued on engines, carburetors, ignition equipment.

Q. Now, you were with the Lauson Company in 1940, and were you at that time making it a practice to keep up with patents as they issued that related to your field of interest?

A. We bought patents where we could find them.

Q. I show you the patent of W. C. Conover, No. 2,227,247, which issued on December 31, 1940 — Exhibit D-99, and ask you whether you recall seeing a copy of that patent at or about the time it issued?

563 A. No, I don't. It — if I did see it it made no impression on me. I don't recall it.

Q. Do you have any recollection of seeing the patent which is here in suit, Lechtenberg patent 2,693,789, at or about the time it issued?

A. Yes, the patent service I was retaining at Jackson sent me a copy of it just about the time it was issued.

Q. Do you recall getting it at that time?

A. Very shortly after the time of issue, yes.

Q. Did it make some impression on you?

A. I — figuratively kicked myself all around the block for not having realized the implications of that patent because that is a tremendous advance in the art.

Mr. Raisch: Are you qualifying Mr. Longenecker as a patent expert?

Mr. Jones: Oh no.

Page of Transcript

Q. Let me ask you this question: What part of the patent do you look at when you get it from the patent —

A. Look at the structure chart and that idea of putting — having standard tooling and getting a variety of uses. We could have die-cast this engine but I couldn't afford to do it because we had so many different models around Exhibits 33 and 34. No, right here. Exhibit 38.

564 Q. Didn't the Sport King engine teach you — the way that machine was made impress you about this Lechtenberg patent?

A. No, it didn't.

Q. Were you ever approached by Clinton for information or possible help to them in the litigation between Briggs & Stratton and Clinton Machine Company?

A. Yes, I was.

That was early in the year of 1955, or possibly late '54. I think it was January or February, 1955. At that
565 time Mr. Erlacher, Sales Manager of Clinton, called on me and said he was soliciting information that might be of help to them in this litigation. And I told him I had just received a copy of the Lechtenberg patent and didn't know too much about the claims. But that as far as I could see it appeared to be somewhat similar to a Sport King engine that we had made. I told him a lot about the Sport King and the lawnmower power head we had made from the Sport King outboard.

Q. Do you still feel that the Sport King is pretty much like the Lechtenberg patent disclosure?

A. Well, it has an opening on the power take-off side. I think the similarity ceases at that point.

566 *Cross Examination*

From 1922 — 1924 to 1926 I was Superintendent and Chief Tool Designer of Fairbanks Morse. At that time we installed our own die casting department and I designed quite a number of die cast dies used in the ma-
567 chines for making carburetors — or magneto equipment, and similar equipment. Since that time I have been in contact with representatives of die casting companies in discussions with our engineerng department relative to the economies of using die castings that might have been stamped, or fabricated in some other way. So we have had the benefit of their comments and experience in regard to the desirability or non-desirability of using die castings.

Providing you have volume enough and providing you have possibility of designing to get the strength that you require you can get simplified machine operations, greater degree of interchangeability, and so forth, in using die castings. Although die castings per se are not necessarily the answer to every problem. You may want to use stamping, or may want to use sand casting. Each problem has to be weighed on its own merits and the economy computed.

Q. Would you say that die casting has become more popular down through the years?

A. Well, the—stop to think back to what we did a few years ago I think there are other things more popular. In other words, there are more things made and probably a percentage of those are being made by die casting, but
568 — I think that there has been a gain in the art as there has been in every other art.

Die casting procedures and machines have not stood still; neither have any of the other manufacturing tech-

Page of Transcript

niques. Even sand casting I think the progress in knowledge in the various arts has come along simultaneously. I don't think you can say it has all gone to die casting and everything else has stood still. I think you have equal benefit in stamping, and all ways.

Q. Would you say that many things today can be die cast that ten or fifteen years ago could not have been die cast?

A. No, I don't think so. I do think there have been many products today that might be made out of bakelite or some other products they thought they had to die cast a few years ago.

Q. What about die casting with aluminum? That was not a common thing 15 or 20 years ago, was it?

A. Aluminum has had greater use in the last few years.

569 Q. And prior to that time it was mostly zinc base die casting, isn't that correct?

A. Yes sir, quite a bit of zinc.

About 1940, as I recall, there were — they were making some things out of aluminum — like connecting rods in small engines — that prior to that time they thought they had to use either permanent molds or sand casting. I think aluminum die casting came into its own pretty well in the '40s, or early in 1940. The benefit in die casting a cylinder block rather than sand casting depends on the volume.

Q. In the ultimate product is die casting a cylinder block any better than sand casting a cylinder block?

A. From a utility standpoint?

Page of Transcript

Q. Yes, forgetting the thing produced and getting it into use.

A. Weight-wise it might be a little advantage, otherwise it is about a standoff.

570 Q. You mentioned I believe that you could die cast the cylinder and crankcase of the Sport King engine. When you mentioned that did you mean die casting of aluminum?

A. It could be die casting — it wouldn't be too good a job with the sections they have there.

Q. You did not sand cast Sport King cylinder castings out of aluminum?

A. It could be done.

Q. Any more difficult than sand casting it out of iron?

A. Oh yes.

Q. It is possible, and would have been possible back prior to 1950, wouldn't it?

A. Yes, we made a good many engines with sand cast aluminum. We charged $76 for them as compared to about thirty-four. We didn't do that because we wanted to hold the government up.

Q. Coming over to the Power Head here, you testified here I believe correctly — if I misquote you I don't do it intentionally. That this plate here, which is the
571 bearing plate, and this plate, which is Exhibit D-79, could not have been made in one piece — could not be made in one piece.

A. It could be made, but it could not be assembled.

• • • •

Page of Transcript

The reason is that the oil pump barrel and the oil pump flange right below the bearing plate engage a fixed pin on the bearing plate, and an extension of the camshaft.

Q. All right, that was due to a special lubricating pump then, wasn't it? Do I understand you correctly it was due to the special design of the lubrication pump, for that reason you could not have assembled the bearing plate and the reservoir D-79 in one piece?

A. Because of your pump being held up in there from below, yes.

Q. Yes, why did you use that kind of a pump? Did this engine require that kind of a pump? You are an expert in this field. Couldn't you use another type of pump or lubrication in this engine?

A. In the space allowed it is about the only pump that would work the best.

572 Q. But it would have been desirable to design another pump or lubrication system?

A. I don't think it would have been as practical a lubricating pattern or value as this one.

Q. No, but it would have been possible to design another lubricating system?

A. Not as desirable. This takes oil through the camshaft and spreads it through a little hole in the camshaft into the working parts of the engine. We tried on this engine here to do what you are talking about. We clamped a vane on the pump for a fellow by the name of Tom Goodall who used a lot of vertical shaft en-

Page of Transcript

gines. Mr. Bosma was very much upset about it, and he disturbed me no end by taking one of these out and proceeding to burn it up because this slinger didn't throw the oil up there. Then we went to a different type of engine with different gears, but that didn't do it. It was not possible to make a closed cavity and do it.

Mr. Jones: Will you identify the Exhibits?

A. In this other type, you mean —

Mr. Jones: Cover 38-C. Cover 38-C and the oil sump on the one below there.

Q. 38-D.

A. — are two separate parts. Definitely I thought — after I left Lauson, we were working on it at that time,
573 we would have made a one-piece job there if it could have been done.

• • • •

Redirect Examination

589 Forgetting about the oil pump now, on this Sports King engine, which is exemplified by Exhibits 34-A and 34-B, you could not have fully and completely fastened down onto the cylinder-crankcase casting this bearing retaining plate if that bearing retaining plate had first been fastened to the sump Exhibit 34-B. Not on the present construction. You might have altered the construction to have mounted something like that possibly, but as it is presently constituted the plate has to be screwed against the crankcase first to hold part of the plate down, and then after that it is screwed to the sump by means of studs.

Page of Transcript

590 **CLARENCE DAMON**

Direct Examination

Defendant's Exhibit D-100 is a Clinton 700 horizontal shaft engine. It is Model B 701. The aluminum mech-
591 anism on the end of the defendant's Exhibit 100 is a similar mechanism to plaintiff's Exhibit 36-B which is attached thereon. Now, this is a speed reducer. The
592 housing of that speed reducer is mounted on the mounting pad which is part of the cylinder crankcase casting. In the same position — or the same surfaces used for adapting it to vertical shaft when the engine is tipped in the other direction, or for application of generators, pumps, and the like. Now, in order to use that speed
593 reducer on the horizontal 700 shaft engine, there are no changes required in the basic engines but the extension of the end of the crankshaft — the end of the crankshaft of the engine either is provided with a diameter suitable for the small gear or has a gear cut on it. So the crankshafts are different. There are no parts that would be different so far as the engine is concerned. So in order to use the speed reducer on the 700 horizontal shaft
594 engine, you use a special crankshaft which is appropriately formed to drive the gears of the speed reducer. There are three reducer speeds, the 2 to 1, 4 to 1, 6 to 1, which entail a different gear here and one different gear on the crankshaft. And then this speed reducer may be mounted in four different positions on the crankcase. In 1950 Clinton was manufacturing and selling a horizontal shaft engine with a speed reducer on the mounting I have just identified, assembled thereon.

595 HAROLD E. BRUNS

Direct Examination

596 I heard Mr. Hugh Brown's testimony regarding a conference that was had between some of the people from Lauson and some of those from Briggs regarding the Lechtenberg patent. I recall attending that conference. At that conference I represented Lauson. Mr. W. A. Holzman, President of Hart-Carter Company, accompanied me for Lauson. Lauson Company did not have an attorney or counsel present at that meeting. The meeting was I believe partially the result of a letter that we received from Briggs & Stratton contending that Lauson was infringing in connection with the Lechtenberg patent here in suit. Present at that meeting on behalf of Briggs & Stratton were Mr. Coughlin, Mr. Oehler, Mr. Brown and Mr. Jones.

597 The meeting had a very friendly tone about it. It started out in general discussion. As I recall Mr. Coughlin indicated that he did not want in any way to spoil the good relations that have existed in the past between Lauson and Briggs. It was an exploratory meeting as far as Lauson people were concerned. We had received this letter or notice. We were a very small company, and we were approaching the largest company in the business. We were exploring the possibility of the cost of litigation as against a royalty arrangement. However, at that meeting Mr. Holzman clearly indicated we felt we had prior art. By prior art I mean defense against the patent. We indicated and told that to Briggs & Stratton.

Q. Now, was any agreement ever reached at that conference?

A. No, not an agreement. Several subjects normally concerned with licensing arrangements were discussed,

Page of Transcript

and several phases of it, but no agreement was reached nor signed nor drawn up.

Q. And did you understand from that meeting that Briggs & Stratton were going to bring a suit against
598 Lauson?

A. No, in fact just as we were leaving, the Briggs people took us for luncheon, Mr. Coughlin said as his last words, let's just let this matter drop for a while and see what happens.

CLETUS V. ERLACHER

Direct Examination

I have previously testified in this case. I heard Mr. Longenecker testify about a meeting with me in the early part of last year. I recall that meeting. During the time
599 that Mr. Longenecker was President of the Yardman, Incorporated, in Jackson, Michigan, I recall calling on Yardman two or three times at which I did have meetings at least twice with Mr. Longenecker. Yardman is in the manufacturing of power lawnmowers for principally Sears Roebuck and Company of Chicago, Illinois. Not being prepared prior to being in this courtroom this afternoon, I could not identify or establish the exact date of these meetings that I had with Mr. Longenecker, particularly the one about which he testified. The approximate date given by Mr. Longenecker may be correct.

600 My occasions for all visits at Yardman in each and every instance was primarily for the purpose of obtaining business from the Yardman in the form of orders for Clinton engines. Never have I made a visit to Mr.

Page of Transcript

Longenecker personally for any other primary purpose than that.

The suit between Briggs & Stratton and Clinton was mentioned during the visit with Mr. Longenecker. I did ask, because he had been president of the Lauson Engine Company, for any assistance that he felt he could extend in our behalf. He gave us no such assistance or indication he had anything one way or the other of material benefit to us. We did request if he did come by any of that information we would appreciate his making it available to us. I personally have never heard further from
601 Mr. Longenecker.

ERNEST A. LONGENECKER

• • • •

603 *Cross-Examination*

Q. Did you thoroughly describe the Sport King or Power Head engine to Mr. Erlacher?

A. No, I didn't — either the pictures or get literature on it. I said we made such an engine that opened on the bottom, and we had made some Power Heads, using that name.

Q. You were using no definite questions —

A. Not necessarily definite questions, I called these things here all a matter of office records. If the record would establish one thing, fine. I didn't know at the time anything about this Lechtenberg, except the picture showed the crankcase opened at the bottom.

Q. You didn't make it clear to him then, did you that
604 that Sport King — did you call it Sport King?

A. I said we made an outboard King out there.

Page of Transcript

Q. Did you make it clear to him that engine would be a defense against the Lechtenberg patent?

A. I thought I did, but apparently I didn't. It was my — my intention so to make it clear to him there was such an engine, that they should investigate it.

Q. — It would be a good defense?

• • • •

A. — I didn't say it would be a good defense, I said there was such an engine made and it should be investigated.

Q. At that time you thought it was a good defense?

A. I didn't know. I looked at it, I didn't have a chance to study it. After I studied it I realized the implication of this Lechtenberg job, but it was just a few days after I received it.

I didn't give him any literature. I didn't take him out and show him my lawnmower.

FINDINGS OF FACT, CONCLUSIONS OF LAW, AND ORDER FOR JUDGMENT

(Filed December 31, 1956)

Following the original trial in this case the Court on March 12th, 1956, made and entered its Findings of Fact, Conclusions of Law, and Order for Judgment. On March 12th, 1956, in accord with the said Findings, Conclusions, and Order the Court entered judgment herein. In said judgment the Court adjudged, decreed, declared, and ordered as follows:

"1. *It is hereby adjudged, decreed, and declared* that Claim 5 of United States Patent No. 2,605,573 issued August 5th, 1952, to Dorothy H. Madle, Administratrix of the Estate of Alain M. Madle, is invalid.

2. *It is hereby adjudged, decreed, and declared* that Claims 1, 2, 4, and 5, the latter two as corrected, of United States Patent No. 2,699,791 issued November 9th, 1954, to Leo J. Lechtenberg are invalid.

"3. *It is hereby adjudged, decreed, and declared* that Claims 1, 2, 4, 5, 6, 7, 8, 14, 15, and 16 of United States Patent No. 2,693,789 issued November 9th, to Leo J. Lechtenberg are valid.

"4. *It is hereby adjudged, decreed, and declared* that such claims are infringed by the defendant's accused VS100 engine.

"5. *It is hereby adjudged, decreed, and declared* that the plaintiff have judgment against the defendant for damages and profits for such infringement, such damages and profits to be later determined; and that the Court retains jurisdiction for the making of such determination.

"6. *It is hereby adjudged and decreed* that the defendant be and it is hereby enjoined and restrained from infringing those claims.

"7. *It is hereby adjudged* that no award of attorney fees be made to either party.

"8. *It is hereby adjudged* that each party shall pay one-half of the taxable costs taxed in the total sum of $.....

"9. *It is hereby ordered* that proceedings under this judgment be stayed until April 16th, 1956."

On March 21st, 1956, the defendant filed a motion for a clarifying opinion and a motion for an additional findings of fact, for a new trial, for extending effective date of judgment, and to amend judgment. On March 22d, 1956, the Court entered an Order extending the effective date of the judgment until June 16th, 1956. On April 2d, 1956, the defendant filed a motion to relieve the defendant from the judgment and Order of March 12th, 1956, and for a new trial with respect to the matter of the validity and infringement of Lechtenberg United States Letters Patent No. 2,693,789 to permit the defendant to present newly discovered evidence. On April 4th, 1956, a hearing was held on the post-judgment motions of the defendant. On April 9th, 1956, following that hearing on said motions the Court entered a ruling the material portions of which are as follows:

"• • • The Court, having considered said motions, is of the view that in litigation involving patents it is desirable the parties be given opportunity to present all of the evidence which they deem material or pertinent where the final decision will not be unduly delayed.

"Under Rule 59 of the Federal Rules of Civil Procedure, in an action tried without a jury the

Court may open up a judgment which has been entered for the purpose of taking additional evidence. The Court is of the view that both of the parties should be given an opportunity to present additional evidence as to any or all of the issues as to all of the patents involved.

"*It is hereby ordered* that the judgment heretofore entered on March 12th, 1956, be and the same is set aside in its entirety.

"*It is further ordered* that both of the parties be and they are hereby given leave to present additional evidence as to any or all of the issues as to all of the patents involved in this litigation, including the issue as to infringement.

"*It is further ordered* that the Court will hear such additional evidence at the Federal Court House at Dubuque, Iowa, starting on June 4th, 1956, at 10:00 o'clock A.M.

"*It is further ordered* that save so far as the post-judgment motions of the defendant are not granted or rendered moot by this Order they are overruled and denied."

On June 4th, 1956, the Court entered the following Order:

"Pursuant to motion of the plaintiff this day made in open court at the Federal Court House at Dubuque, Iowa;

"*It is hereby ordered* that the claims of the plaintiff based upon Lechtenberg Patent No. 2,693,791, referred to as the second Lechtenberg Patent, be and they are hereby dismissed."

On June 4th, 5th, and 6th, 1956, the parties presented their additional evidence. The additional evidence presented related to the validity of Claim 5 of Madle patent

No. 2,605,753, the claimed infringement of that claim by the defendant, the validity of Claims 1, 2, 4, 5, 6, 7, 8, 14, 15, and 16 of Lechtenberg patent No. 2,693,789, and the claimed infringement of those claims by the defendant. Following the submission of the additional evidence, written briefs and arguments were filed. On October 1st, 1956, oral arguments were made following which the case was submitted to the Court and by it taken under advisement. In the proceedings subsequent to March 12th, 1956, Ira Milton Jones, James R. Custin, and E. Marshall Thomas appeared as attorneys for the plaintiff. Edwin J. Balluff, Arthur Raisch, Hal F. Reynolds, Wayne G. Cook, and Charles McKinley appeared as attorneys for the defendant. Now, to-wit, on this 31st day of December, 1956, the Court now being fully advised in the premises makes and enters the following Findings of Fact, Conclusions of Law, and Order for Judgment.

FINDINGS OF FACT

1. The plaintiff, Briggs & Stratton Corporation, is a corporation organized and existing under the laws of the state of Delaware with its main office and manufacturing plant at Milwaukee, Wisconsin. The defendant, Clinton Machine Co., is a corporation organized and existing under the laws of the state of Michigan. Its main office is at Clinton, Michigan. It has manufacturing plants at Clinton, Michigan, and Maquoketa, Jackson County, Iowa. Jackson County, Iowa, is in the Eastern Division of the Northern District of Iowa. The plaintiff charges the defendant with patent infringement committed in this District. Jurisdiction is based upon Section 1338, Title 28, United States Code. Venue is based upon Section 1400 (b), Title 28, United States Code.

2. The plaintiff and the defendant are among the leading manufacturers of light internal combustion gasoline engines and they are in keen competition in that field. The greater number of the engines manufactured by them are sold to manufacturers, assemblers, and distributors of rotary lawn mowers. They are placed on and attached to such mowers for the purpose of furnishing the motive power for them. The plaintiff concentrates upon the manufacture of a single cylinder four cycle internal combustion engine. The abbreviation V.S., as used in connection with the engines hereafter referred to, stands for Vertical Shaft.

3. The plaintiff charges the defendant with infringement of United States patent No. 2,605,753 issued August 5th, 1952, to Dorothy H. Madle, Administratrix of the Estate of Alain M. Madle of which patent the plaintiff is the assignee and owner. That patent is hereafter referred to as the Madle patent. The plaintiff further charges the defendant with infringement of United States patent No. 2,693,789 issued November 9th, 1954, to L. J. Lechtenberg of which the plaintiff is also the assignee and owner.

4. At a pretrial conference held prior to the original trial, counsel for the plaintiff stated that in connection with the Madle patent the plaintiff relied upon Claims 2, 5, 6, and 10. At the beginning of the original trial the plaintiff dismissed with prejudice as to Claims 2, 6, and 10 of that patent. As to the Madle patent the plaintiff relies upon Claim 5 thereof. That patent and claim will be first considered.

5. In gasoline internal combustion engines the mixture in the combustion chamber is ignited by means of an ignition system. Breaker points are a component

part of that system. One of the breaker points is fixed and the other is movable. A spark is made at the time the points separate. It is necessary that the sparks be timed in accord with the speed and working of the engine.

6. Claim 5 of the Madle patent is given in the form set forth by the plaintiff. In the patent that claim appears without the breaks and numbers hereafter appearing:

Claim 5

In an ignition system for a single cylinder four cycle internal combustion engine of the type having a crankshaft driven magneto for effecting spark plug operation:

1. fixed and
2. movable breaker points
3. accessibly mounted on the exterior of the engine remote from the magneto;
4. a cam follower movably supported by the engine
5. remote from the breaker points;
6. a motion transmitting connection between the cam follower and the movable breaker point

   such that separation of the points is effected by motion of the cam follower in one direction;

7. a rotatable part adjacent to said cam follower;

8. a driving connection between said rotatable part and the engine crankshaft

whereby the speed of rotation of the crankshaft determines the speed of rotation of said rotatable part;

9. a member carried by said rotatable part for rotation therewith and for motion relative thereto in response to centrifugal force; and

10. a cam surface on said member engaged by said cam follower

for imparting motion to the cam follower in said direction once each revolution of the rotatable part to effect breaker point separation at instants depending upon the speed of crankshaft rotation and the position of said member relative to the rotatable part as determined by the centrifugal force acting on said member.

7. In the Madle patent reference is made to the following patents:

Number	*Name*	*Date*
1,224,247	Wacker	May 1, 1917
1,291,216	Smith	Jan. 14, 1919
1,463,958	Kettering	Aug. 7, 1923
1,636,017	Smith	July 19, 1927
1,736,441	Hendrickson	Nov. 19, 1929
1,904,308	Harmon	Apr. 18, 1933
2,013,541	Littlefield	Sept. 3, 1935
2,215,106	Lefebvre	Sept. 17, 1940

8. The defendant gave notice of many prior art patents in connection with the Madle patent. It introduced into the evidence a substantial number, but not all, of the patents of which it gave notice. The following were the patents introduced into evidence by the defendant in connection with the Madle patent:

Number	*Name*	*Date*
740,781	Sturtevant	October 6, 1903
780,221	Packard	January 17, 1905
798,992	Cochran	September 9, 1905
810,963	Motsinger	January 30, 1906
816,083	Farwell	March 27, 1907
857,715	Brillie	June 25, 1907
863,151	Churchill	August 13, 1907
906,290	Riker	December 8, 1908
1,239,689	Heaslet	September 11, 1917
1,265,454	Kettering et al	May 7, 1918
1,281,204	Pitts	October 8, 1918
1,291,216	Smith	January 14, 1919
1,401,058	Erickson	December 20, 1921
1,427,718	Brown	August 29, 1922
1,430,524	Kettering	September 26, 1922
1,463,958	Kettering	August 7, 1923
1,465,644	Kettering	August 21, 1923
1,636,017	Smith	July 19, 1927
1,792,089	Hardman	February 10, 1931
1,983,072	Davis, Jr.	December 4, 1934
2,013,541	Littlefield	September 3, 1935
2,215,106	Lefebvre	September 17, 1940
2,388,994	Phelon	November 13, 1945
Foreign Patent		
310,082	British	April 22, 1929

No additional patents relating to the Madle patent were introduced into evidence at the hearing at which the parties presented additional evidence. That hearing

will be referred to as the supplemental hearing. Both parties presented considerable additional evidence at that hearing relating to the matter of the invalidity of Claim 5 of the Madle patent and the claimed infringement of that claim by the defendant. The Court has reconsidered the matter of the validity of Claim 5 of the Madle patent in the light of all the evidence. The Court has also considered the question of infringement in the light of all the evidence.

9. In the plaintiff's brief, original hearing (pp. 6-8), the plaintiff states as hereafter set forth in regard to the invention defined by Claim 5:

> "The Madle patent relates to a magneto ignition system for a single-cylinder four stroke cycle internal combustion engine, and, so far as is material to this case, it refers more particularly to means for actuating the movable breaker point in such a magneto ignition system.
>
> "Without going into technical detail, the breaker points in an internal combustion engine comprise a pair of electrical contacts which separate or 'open' to cause a spark to jump across the spark plug electrodes. Since sparking of the plug follows instantaneously upon opening of the breaker points, breaker point opening must be timed quite accurately in relation to the rotational position of the crankshaft in order to insure that ignition of the fuel-air mixture charge in the cylinder will occur at the proper instant in the cycle of engine operation. (R. 183-184) When the engine is being started, the spark should occur relatively late in the cycle, near the instant when the piston reaches top dead center at the end of its compression stroke, but as the engine increases speed the spark should occur a substantial time before this top dead center position.

"Mechanisms were known, even before the Madle invention, for automatically advancing the spark with increasing engine speed, and this was usually accomplished by means of a centrifugally responsive mechanism which took advantage of the fact that the centrifugal force on a rotating part increases with increasing rotational speed. Prior to the Madle invention, however, all such automatic spark advance mechanisms had one or more of the following important disadvantages:

> "(1) An external lubrication system, separate and additional to that inside the engine crankcase, was required for the breaker point actuating cam and other rotating or rubbing parts in the breaker actuating mechanism. One conventional expedient for effecting lubrication was a wiper or wick at the exterior of the engine which required service from time to time. (R 578-579)
>
> "(2) The breaker points in single-cylinder engines were usually mounted behind the engine flywheel, that is, between the flywheel and its adjacent crankcase wall. Located in this position the points could not be readily serviced or replaced. Access to the points usually necessitated removal of the blower housing and then detachment of the flywheel from the crankshaft by means of a pulling tool.
>
> "(3) The breaker point actuating cam was usually mounted on the engine crankshaft and therefore rotated at crankshaft speed, causing the breakers to produce an unnecessary spark during each cycle of engine operation.

"Madle's invention was the conception of a simple structure which not only avoided every one of these disadvantages of past mechanisms but in addition was efficient, compact and trouble-free. (R 187-188)

> "By mounting the breaker actuating cam on the camshaft, instead of on the crankshaft, Madle was able to make the breaker points open only once during each engine cycle, eliminating the unnecessary spark which occurred with a crankshaft mounted cam and which shortened the life of spark plugs and breaker points. By mounting the flyweight, which actuates the cam for angular movement, on the camshaft, Madle not only achieved simplicity and compactness, utilizing the camshaft for a dual function, but, more important, he disposed the rotating and rubbing parts inside the engine crankcase where they operated in a constant spray or mist of engine lubricating oil thus obviating the need for any external lubrication system such as the wiper or wick which had theretofore been considered necessary. And by employing a simple motion transmitting connection between the movable breaker point and the cam follower inside the crankcase, Madle was able to mount the breaker points in a readily accessible location on the exterior of the engine, where they would not be likely to have oil deposited upon them."

In the plaintiff's rebuttal brief, original hearing (p. 6), the plaintiff makes the further statement:

> Defendant has ignored two key phrases in claim 5 which point directly to the invention covered thereby. The breaker points are defined as mounted on the exterior of the engine *'remote from'* the magneto; and the cam follower is defined as *'remote from'* the breaker points. For a correct understanding of the claim, these expressions cannot be disregarded."

10. The question for determination is as to what patentable invention is shown by Claim 5 and the engine manufactured in accord therewith. Fixed and movable

breaker points were not new. The advancing and retarding of the spark in proportion to the speed of the engine was not new. A camshaft driven at one-half of the crankshaft speed was not new. The placing of the breaker points outside of the crankcase and remote therefrom was not new. If Claim 5 is construed to be limited to a cam and cam follower within the crankcase for actuating the timing mechanism so that the cam and cam follower would be lubricated (which is doubtful), such construction was disclosed in the prior art. A "cam follower movably supported by the engine remote from the breaker points" was not new. A "motion transmitting connection between the cam follower and the movable breaker point such that separation of the points is effected by motion of the cam follower in one direction" was not new. A "rotatable part adjacent to said cam follower" was not new. A "driving connection between said rotatable part and the engine crankshaft whereby the speed of rotation of the crankshaft determines the speed of rotation of said rotatable part" was not new. A "member carried by said rotatable part for rotation therewith and for motion relative thereto in response to centrifugal force" was not new. A "cam surface on said member engaged by said cam follower" was not new. In Claim 7 of the Madle patent, a claim not relied on by the plaintiff in this case, after referring to the cam, it is stated: " * * * said cam overlying the opposite face of the member so that the member is interposed between said cam and the arm to guide the arm in its swinging motion; * * * " No similar statement occurs in Claim 5. In none of the prior art patents is the cam mounted on one side of the gear and the swingable centrifugally actuated arm on the other side of the gear. However, if

Claim 5 be construed to include that feature, such location would be a matter of engineering choice rather than of patentable invention. It is not clear that the plaintiff claims that the location of the parts referred to constituted patentable invention.

11. The elements set forth in Claim 5 and contained in the plaintiff's engine manufactured in accord with that claim were old and well known. However, the fact that all of such elements are old does not prevent them, when considered as a whole, from constituting patentable invention. After considering Claim 5 from that viewpoint, the Court is of the view and finds that Claim 5 is an aggregation of old elements which, in the aggregation, perform and produce no new or different function or operation than that theretofore performed or produced by them.

12. In the case of the Madle patent the accused engine is the defendant's Model 2500 engine. The defendant's claim as to its non-infringement of the Madle patent is in substance premised upon the premise that Claim 5 of the Madle patent does not define inventive combination but merely covers an aggregation of old elements. If Claim 5 of the Madle patent does define inventive combination, then the defendant's Model 2500 engine infringes that claim.

13. As heretofore noted, it is the claim of the plaintiff that the defendant's V. S. 100 engine infringes Claims 1, 2, 4, 5, 6, 7, 8, 14, 15, and 16 of the first Lechtenberg

patent, No. 2,693,789. That patent cites the following reference to patents:

Number	*Name*	*Date*
1,447,245	Gore	Mar. 6, 1923
1,463,958	Kettering	Aug. 7, 1923
2,157,666	Jacobi	May 9, 1939
2,249,319	Lohner	July 15, 1941
2,256,002	Molnar	Sept. 16, 1941
2,305,186	Muenk	Dec. 15, 1942
2,375,718	Winkels et al.	May 8, 1945
2,404,833	Forster	July 30, 1946
2,424,416	Piry	July 22, 1947
2,511,823	Klotsch	June 13, 1950
2,559,079	Leja	July 3, 1951
2,569,461	Dingman	Oct. 2, 1951
2,583,466	Brownlee	Jan. 22, 1952
2,590,134	Slonneger	Mar. 25, 1952
2,606,541	Lutz	Aug. 12, 1952
2,630,881	Bosma	Mar. 10, 1953
2,669,322	Brown	Feb. 16, 1954

Foreign Patents

Number	*Country*	*Date*
32,802	Netherlands	May 15, 1934

The defendant gave notice as to a number of claimed prior art patents in connection with the first Lechtenberg patent. At the original trial it introduced the following into evidence:

Number	*Name*	*Date*
*1,242,985	Sawtelle	Oct. 16, 1917
2,157,666	Jacobi	May 9, 1939
*2,357,942	Farr	Sept. 12, 1944
2,404,833	Forster	July 30, 1946
2,559,079	Leja	July 3, 1951
*2,627,940	Bakke	Feb. 10, 1953
2,606,541	Lutz	Aug. 12, 1952
*2,346,148	Bosma	April 11, 1944
2,630,881	Bosma	March 10, 1953
*1,276,891	Felix	Aug. 27, 1918

Those marked with an asterisk were not included in the patents to which reference was made in the patent. Those not so marked were referred to in the patent.

At the supplemental hearing the defendant relied upon the following prior art patents as anticipations and to show the state of the art in relation to Lechtenberg patent No. 2,693,789:

Number	*Name*	*Date*
615,766	Vansickle	Dec. 13, 1898
2,218,332	Fowler	Oct. 15, 1940
2,227,247	Conover	Dec. 31, 1940
2,346,148	Bosma	April 11, 1944
2,097,662	Hennecke	Nov. 2, 1937
2,417,195	Hargreaves	March 11, 1947
2,627,940	Baake	Feb. 10, 1953

The Bosma and Baake patents were in evidence at the original hearing but were not discussed. The defendant prior to the original trial specially pleaded the Vansickle patent but did not put it in evidence at that trial. The Conover, Fowler, Hennecke, and Hargreaves patents were put into evidence at the supplemental hearing. At the supplemental hearing the defendant also relied on prior use and it presented considerable evidence as to claimed prior use. In that connection the defendant relied upon an engine referred to as the "Lauson" engine which was manufactured and sold by the Lauson Company of New Holstein, Wisconsin, from 1941 to 1947. In that connection it also relied upon the prior use of its single-cylinder four stroke cycle air cooled Model 700 engine. The defendant stresses that none of the prior art patents last above referred to or prior public uses were cited by the Patent Office against the application of the Lechtenberg patent in question. Claims 1, 2, 4, 5, 6, 7, 8, 14, 15, and 16 of the first Lechtenberg patent are as follows:

> "1. A single cylinder internal combustion engine having a crankcase with two spaced apart side walls, each of which carries a crankshaft bearing, a cylinder

and a crankshaft journaled in the bearings with its ends projecting from the crankcase, one end of the crankshaft having a flywheel mounted thereon and the other end being the power take-off end of the shaft, characterized by the fact that: the cylinder and all portions of the crankcase including the wall thereof remote from and facing the cylinder, except that wall of the crankcase which carries the bearing for the power take-off end of the crankshaft is a single casting; and further by the fact that said wall of the crankcase which carries the bearing for the power take-off end of the crankcase is provided by a cover removably secured to said casting so that said cover is interchangeable with others of different design to adapt the engine to any of a variety of different installations without necessitating alteration of the cylinder-crankcase casting.

"2. A single cylinder four-stroke cycle internal combustion engine having a crankshaft, a cam shaft parallel to the crankshaft, a cylinder and a crankcase, through opposite walls of which the ends of the crankshaft pass, one end of the crankshaft having a flywheel thereon and the other end being the power take-off end of the crankshaft, characterized by the fact that: the cylinder and all portions of the crankcase including the wall thereof remote from and facing the cylinder, except that wall of the crankcase through which the power take-off end of the crankshaft passes, is one casting; by the fact that said wall through which the power take-off end of the crankshaft passes is provided by a cover removably secured to said casting; by the fact that the crankshaft and the cam shaft are supported by said cover and the wall of the casting opposite the cover; and by the fact that the supports for the cam shaft comprise wells in the cover and said opposite wall of the casting.

"4. The engine defined in claim 2 further characterized by the fact that said cover has a relatively

deep depression in its inner face so that when the engine is positioned to operate with its cylinder horizontal and said cover at the bottom of the engine, the depression in its inner face provides an oil sump; and characterized further by the fact that the cover has a boss projecting from its inner face and bored through to provide a bearing for the adjacent end of the crankshaft, said boss extending for substantially the full depth of the depression in the cover so that oil in the depression rising to a level substantially equal to the full depth of the depression, when the engine is used with its cylinder horizontal, will not drain out along the crankshaft when the engine is idle.

"5. A single cylinder, four-stroke cycle internal combustion engine adapted for operation with its cylinder horizontal, said engine having in addition to its cylinder a crankshaft, a cam shaft parallel to the crankshaft, and a crankcase with spaced apart top and bottom walls through which the upper and lower ends of the crankshaft pass, said engine being characterized by the fact that: the cylinder and all portions of the crankcase except its bottom wall through which the lower end of the crankshaft passes is one casting; by the fact that said bottom wall comprises a cover having a relatively deep depression removably secured to the casting with the edge of the depression joining the casting on a plane parallel to said top and bottom walls and below the cylinder, by the fact that the cam shaft is supported by the cover and the top wall of the crank case and the bearings for the crankshaft are in said cover and the top wall of the crankcase; further by the fact that the depression in the cover provides an oil sump and has an oil filler port therein communicating with the depression below the top edge thereof with the mouth of the filler port on a level no higher than the edge of the depression so that the level of

the oil in the sump will not be above the edge of the depression; and said cover being further characterized by a pair of bosses projecting up from the bottom of its depression, one of said bosses being bored through and providing the bearing for the lower end of the crankshaft, and the other boss having a well, closed at its bottom extending down into it and providing a support for the lower end of the cam shaft, the boss providing the lower crankshaft bearing extending substantially to the level of the edge of the depresison (sic) in the cover so that when the engine is idle the oil in the sump will not be drained therefrom through said crankshaft bearing.

"6. A single cylinder, four-stroke cycle internal combustion engine adapted for operation with its cylinder horizontal, said engine having in addition to its cylinder a crankshaft, a cam shaft parallel to the crankshaft, and a crankcase with spaced apart top and bottom walls through which the upper and lower ends of the crankshaft pass, said engine being characterized by the fact that: the cylinder and all portions of the crankcase except its bottom wall through which the lower end of the crankshaft passes is one casting; by the fact that said bottom wall comprises a cover removably secured to the casting and having a relatively deep depression; by the fact that the cam shaft is supported by the cover and the top wall of the crank case and the bearings for the crankshaft are in said cover and the top wall of the crankcase; further by the fact that the depression in the cover provides an oil sump[;] and said cover being further characterized by mounting means formed integrally therewith for mounting the engine with its cylinder horizontal.

"7. The engine defined in claim 6 but wherein said mounting means for the engine comprises a substantially circular flange on the cover having a flat down-

wardly facing rim concentric to the crankshaft axis and adapted to seat upon a flat surface.

"8. The engine defined in claim 6 but wherein said mounting means for the engine extends from the region of the oil sump towards the cylinder head to thereby enable the mounting means to provide a large mounting area without greatly increasing the outline of the engine.

"14. In an engine of the character described: a cylinder and a crankcase formed as one casting, the crankcase being open at its bottom; a cover closing the open bottom of the crankcase, said cover having a depression therein providing an oil sump for the engine; bearings for the crankshaft of the engine carried by the cover and the wall of the crankcase opposite the cover; said cover having an oil filler port provided by a well extending down from the top of the cover alongside the depression in the cover, the top of said well providing the mouth of the port and lying substantially on a plane with the top edge of the depression; and the cover having an oil drain port in its bottom provided by a bore parallel to the oil filler port but lying between said port and the adjacent wall of the depression and breaking through both the wall of the depression and the oil filler port to thereby communicate the oil filler port with the interior of the depression; and removable caps for closing both the oil filler port and said oil drain port.

"15. In an engine of the character described, the structure set forth in claim 14 further characterized by the provision of a boss projecting from the bottom of the depression in the cover, said boss being bored through and providing the bearing for the lower end of the crank shaft and having a height to reach substantially to the level of the mouth of the filler port so that oil in the sump cannot drain out through the lower crank shaft bearing when the engine is idle.

"16. A single cylinder four-stroke cycle internal combustion engine having a crankshaft, a cylinder and a crankcase through opposite walls of which the ends of the crankshaft pass, one end of the crankshaft having a flywheel thereon and the other end being the power take-off end of the crankshaft, characterized by the fact that: the engine is designed to be used with its cylinder horizontal with the walls of the crankcase through which the crankshaft passes being the top and bottom walls of the crankcase and with the flywheel adjacent to the top wall and the power take-off end of the crankshaft projecting down from the bottom wall; by the fact that the cylinder and all portions of the crankcase including the wall thereof remote from and facing the cylinder, except the bottom wall through which the power take-off end of the crankshaft passes is one integral casting; by the fact that said bottom wall is provided by a cover removably secured to said casting; by the fact that the crankshaft and the cam shaft are supported by said cover and the top wall of the crankcase; by the fact that said cover has a relatively deep upwardly opening depression which provides an oil sump; and characterized further by the fact that the cover has a boss projecting upwardly from its inner face and bored through to provide a bearing in which the lower end of the crankshaft is rotatably supported, said boss extending for substantially the full depth of the depression in the cover so that oil in the depression rising to a level equal to the full depth of the depression will not drain out along the crankshaft when the engine is idle."

14. The plaintiff, following extensive experiments in January, 1953, placed on sale a die cast aluminum one cylinder four cycle air cooled gasoline engine. Soon thereafter the defendant brought out its V.S. 100 engine which is the accused engine. The structure of the plaintiff's en-

gine is in accord with the disclosure contained in Lechtenberg patent No. 2,693,789. The plaintiff's engine met and is meeting with marked commercial success. In the plaintiff's engine the crankcase and cylinder is cast as one integral unit. That unit is the main and most expensive part of the engine. Engines of the type here involved have a cover casting which is removable. In the plaintiff's engine the removable cover is at the bottom of the engine with the crankshaft protruding through it. Engines of the type here involved are designed to be installed on other pieces of equipment to furnish the motive power for them. It is indicated that there are 36 possible uses to which engines of the type here involved may be put. Engines of the type here involved are installed on various decks or platforms of various types and kinds of equipment. The plaintiff's bottom cover casting is interchangeable with shapes of covers of different designs so as to adapt the engine to a variety of installations without any alteration in the cylinder crankcase casting. By using aluminum the plaintiff substantially reduced the weight of the engine. By die casting the plaintiff reduced the cost of the engine. By means of the bottom cover the plaintiff greatly increased the adaptability of the engine. It is clear that the plaintiff's engine is light, compact, reasonably priced, highly adaptable, and outstanding in its field. The question for determination is whether the structure disclosed by Lechtenberg patent No. 2,693,789 discloses patentable invention, or merely a high degree of artisanship.

15. The casting of the cylinder and crankcase as an integral unit was not new. The die casting of engine parts was not new. The use of aluminum was not new. Having one wall of the engine removable was not new.

Having the bottom cover of the engine removable was not new.

16. In its original Findings. The Court made the following finding:

> "The patent discloses a separation of the bottom cover casting and the cylinder crankcase casting in such a way and manner that all of the constants are in the main and the more expensive casting and all of the variables are in the inexpensive bottom cover casting. That feature was not disclosed in the prior art and was new. The Court finds that such disclosure constituted patentable invention. Such disclosure appears more specifically and definitely in some of the claims than it does in others, but it more or less inheres in all of the claims."

In the light of the additional prior art patents introduced into evidence at the supplemental hearing and further development of the prior art patents introduced into evidence at the original trial and the evidence as to prior use introduced at the supplemental hearing, the Court is of the view that its finding as to patentable invention was erroneous. The word "variables" as used in that finding by the Court signified those features of bottom cover castings by means of which the engine could be adapted to various and different uses. Therefore, that finding was premised upon the adaptability of the engine disclosed by Lechtenberg patent No. 2,693,789 to various and different uses by means of interchangeable cover plates. It now appears that the adaptability of engines to various and different uses by means of interchangeable bottom parts was not new. Such adaptability was disclosed in the Vansickle, Conover, and Bosma patents. It now appears beyond a reasonable doubt that the use of such interchangeable parts to adapt an engine to va-

rious and different uses was not new. It now appears beyond a reasonable doubt that prior to Lechtenberg patent No. 2,693,789 there was wide prior use of interchangeable parts to adapt an engine to various and different uses.

17. The Court now finds that none of the disclosures in Lechtenberg patent No. 2,693,789 constitute patentable invention in view of the prior art and prior use. The Court finds that Claims 1, 2, 4, 5, 6, 7, 8, 14, 15, and 16 of Lechtenberg patent No. 2,693,789 constitute an aggregation of old elements which, in the aggregation, perform and produce no new or different function or operation than that heretofore performed or produced by them.

18. The engine produced by the plaintiff in accord with the disclosures of the Lechtenberg patent represents a high degree of artisanship and an excellent piece of engineering. However, the disclosures do not amount to patentable invention.

19. At the original hearing the defendant did not claim or argue that its V.S. 100 engine did not infringe the Lechtenberg patent if that patent was valid. The attack of the defendant at the original hearing was confined to the matter of the validity of that patent. At the supplemental hearing the defendant claimed that even if the Lechtenberg patent was valid its V.S. 100 engine did not infringe and offered evidence in support of that claim.

20. The defendant's accused engine has a cylinder liner which does not appear in the disclosures of the Lechtenberg patent or in the engine manufactured by the plaintiff in accord therewith. Save in the matter of the cylinder

liner, the defendant's accused engine is a striking and almost slavish copy of the plaintiff's engine. If the claims of Lechtenberg patent No. 2,693,789 do define inventive combination, the defendant's accused engine clearly infringes.

21. The Court finds that the circumstances are such that no award of attorney fees should be made to the defendant.

22. The Court finds that the circumstances are such that each party should be assessed one-half of the taxable costs.

CONCLUSIONS OF LAW

1. This Court has jurisdiction of the parties to this action and of the subject matter of this action.

2. Claim 5 of Madle patent No. 2,605,753 is invalid as lacking in invention over the prior art.

3. Claims 1, 2, 4, 5, 6, 7, 8, 14, 15, and 16 of Lechtenberg patent No. 2,693,789 are invalid as lacking in invention over the prior art.

4. No attorney fees should be awarded to the defendant.

5. Each party should pay one-half of the taxable costs of this action.

ORDER FOR JUDGMENT

It is hereby ordered that judgment shall be entered adjudging, decreeing, and declaring:

1. that Claim 5 of Madle patent No. 2,605,753 is invalid;
2. that Claims 1, 2, 4, 5, 6, 7, 8, 14, 15, and 16 of Lechtenberg patent No. 2,693,789 are invalid.
3. that no award of attorney fees should be made to the defendant;
4. that each party pay one-half of the taxable costs.

s/ Henry N. Graven

Henry N. Graven,
United States District Judge.

The above is a true copy.

Attest:
Lee McNeely, Clerk.

By

Deputy Clerk.

JUDGMENT

On March 12th, 1956, following the original trial herein, the Court made and entered herein its Findings of Fact, Conclusions of Law, and Order for Judgment and Judgment. On April 9th, 1956, the Court set aside said Findings, Conclusions, Order for Judgment and Judgment and reopened the case for the presentation of additional evidence as to all of the issues in the case. On June 4th, 5th, and 6th, 1956, the parties presented their additional evidence. Following the submission of the additional evidence, written briefs and arguments were filed. On October 1st, 1956, oral arguments were made, following which the case was submitted to the Court and by it taken under advisement. Ira Milton Jones, James R. Custin, and E. Marshall Thomas appeared as attorneys for the plaintiff. Edwin J. Balluff, Arthur Raisch, Hal F. Reynolds, Wayne G. Cook, and Charles McKinley appeared as attorneys for the defendant. On December 31st, 1956, the Court filed herein its Findings of Fact, Conclusions of Law, and Order for Judgment. Now, therefore, in accord with said Findings, Conclusions, and Order;

It is hereby adjudged, decreed, and declared that Claim 5 of United States Patent No. 2,605,753 issued August 5th, 1952, to Dorothy H. Madle, Administratrix of the Estate of Alain M. Madle, is invalid.

It is further adjudged, decreed, and declared that Claims 1, 2, 4, 5, 6, 7, 8, 14, 15, and 16 of United States Patent No. 2,693,789 issued November 9th, 1954, to Leo J. Lechtenberg are invalid.

It is further adjudged that no award of attorney fees be made to the defendant.

It is further adjudged that each of the parties shall pay one-half of the taxable costs taxed in the total sum of $.....

Signed in the Northern District of Iowa this 31st day of December, 1956, for entry in the Eastern Division.

/s/ Henry N. Graven

Henry N. Graven,
United States District Judge.

The above is a true copy.

Attest:

Lee McNeely,
Lee McNeely, Clerk.

By

Deputy Clerk.

NOTICE OF APPEAL TO COURT OF APPEALS

Please take notice that Briggs & Stratton Corporation, plaintiff above named, hereby appeals to the United States Court of Appeals for the Eighth Circuit from the Final Judgment entered in this action on December 31, 1956.

Ira Milton Jones
110 East Wisconsin Avenue
Milwaukee 2, Wisconsin

January 25, 1957

Counsel for Plaintiff

Of Counsel:
E. Marshall Thomas
609 Fischer Building
Dubuque, Iowa

NOTICE OF CROSS-APPEAL

(Filed January 30, 1957)

Notice is hereby given that, contingent upon and effective only in the event of the filing of an appeal by plaintiff Briggs & Stratton Corporation from the Judgment of this Court entered December 31, 1956, in the above identified suit, defendant Clinton Machine Co., Inc. appeals to the United States Court of Appeals for the Eighth Circuit from that portion of the decision entered December 31, 1956, in effect holding United States patents 2,693,789 and 2,605,753 infringed by defendant, and from the failure of the said Judgment to grant defendant all of the relief asked in its counterclaim and specifically from the failure to enter judgment on said counterclaim that said patents 2,693,789 and 2,605,753, if valid, are not infringed by defendant.

CLINTON MACHINE CO., INC.,
Defendant

By Edwin J. Balluff

Edwin J. Balluff
Attorney for Defendant

3153 Penobscot Building
Detroit 26, Michigan

RELEVANT DOCKET ENTRIES IN DISTRICT COURT

1954

Dec. 9 Filed Complaint.

Dec. 9 Issued Summons and delivered same, with attested copy thereof and copy of the Complaint to U. S. Marshal's office at Dubuque for service.

Dec. 9 Mailed to Commissioner of Patents, Washington, D. C., report on Form 789, of the filing of this cause of action.

Dec. 10 Issued Summons for service on Defendant, Clinton Machine Co., Inc. by serving Arthur F. Janssen, Iowa Resident Agent for Clinton Machine Co., Inc., and delivered same, with attested copy thereof and copy of the Complaint to U. S. Marshal's office at Dubuque for service.

Dec. 10 Filed Summons with Marshal's return thereon showing service on Defendant by serving L. J. Socks, General Manager and General Managing Agent of the Clinton Machine Co., Inc., at Maquoketa, Iowa, on December 9, 1954.

Dec. 13 Filed Summons with Marshal's return thereon showing further service on Clinton Machine Company, Inc., by serving Arthur F. Janssen, Iowa Resident Agent for the said Company at Maquoketa, Iowa, on December 11, 1954 at 2:00 o'clock P.M.

Dec. 29 Filed Appearance of Thos. S. Donnelly, Detroit, Michigan and Messrs. Kenline, Roedell, Hoffmann & Reynolds, Dubuque, as counsel for Defendant.

Dec. 29 Filed Stipulation of parties for extension of time to and including January 20, 1955, for Defendant to file Answer or otherwise plead.

Dec. 30 Filed and entered Court Order made this date extending time to and including January 20, 1955, for the Defendant to Answer or otherwise plead.

Dec. 31 Attested copy of above Order mailed this date to all counsel of record.

1955

Jan. 14 Filed Appearance of Edward M. Apple, Detroit, Michigan, as of counsel for Defendant.

Jan. 14 Filed Defendant's Answer and Counter-Claim; with endorsement thereon by Mr. E. Marshall Thomas, Dubuque, of counsel for Plaintiff, showing receipt of copy on January 13, 1955.

Jan. 19 Filed and entered Court Order made this date assigning this case for pre-trial conference at Dubuque, Iowa, on January 27, 1955, at 9:00 A.M.

Jan. 20 Attested copy of above Order mailed this date to all counsel of record.

Jan. 26 Filed Plaintiff's Reply to Counterclaim.

Jan. 27 Filed and entered Court Order made this date on pretrial conference held at Dubuque on January 27, 1955.

Jan. 27 Filed and entered Court Order made this date assigning this case for Court Trial at Dubuque on April 18, 1955, at 10:00 A.M.

Jan. 27 Attested copies of last two above noted Orders mailed this date to all counsel of record.

Feb. 7 Filed withdrawal of appearance of Edward M. Apple, Attorney, Detroit Michigan, as counsel for defendant.

Feb. 8 Filed certified Transcript of Arthur L. Bye, Official Court Reporter, of proceedings at pre-trial conference held at Dubuque on January 27, 1955.

Feb. 24 Filed Plaintiff's Interrogatories to Defendant with Proof of Service thereof on Defendant's counsel.

Feb. 24 Received from Mr. E. Marshall Thomas, of counsel for Plaintiff, and filed certified copies of the file wrapper and contents of application for Patent No. 653,493; application for Patent No. 108,293; Patent No. 2,605,753; Patent No. 2,693,789; and Patent No. 2,693,791; identified at the Pretrial Conference as Exhibits 1A, 1B, 1C, 2A, and 3A respectively.

Mar. 4 Received and filed Depositions of Hugh S. Brown, Joseph R. Harkness, and Leo J. Lechtenberg, taken on behalf of Defendant in Milwaukee, Wisconsin before Edna W. Knueppel, Notary Public, on Feb. 8, 1955.

Mar. 4 Filed Notice of prior public use and additional prior art, by Defendant, with endorsement thereon showing copy of same received on February 28, 1955, by counsel for Plaintiff.

Mar. 4 Filed Defendant's Application of prior art cited, with endorsement thereon showing copy of same received on February 20, 1955, by counsel for Plaintiff.

Mar. 7 Filed Stipulation signed by the parties relative to sample engines identified as 6BHX which were shipped by Plaintiff to various customers throughout the United States during January 1953 and invoiced to the customers on sixty day experimental terms.

Mar. 11 Filed Defendant's Answer to Plaintiff's Interrogatories; with endorsement thereon showing receipt of copy by Plaintiff's counsel on March 11, 1955.

Mar. 11 Filed Additional Interrogatories Propounded by Plaintiff to Defendant; with endorsement thereon showing receipt of copy by Defendant's counsel on March 11, 1955.

Mar. 15 Filed Plaintiff's References Cited in File of Madle' U. S. Patent No. 2,605,753.

Mar. 15 Filed Plaintiff's References Cited in File of Lechtenberg U. S. Patent No. 2,693,789.

Mar. 15 Filed Plaintiff's References Cited in File of Lechtenberg U. S. Patent No. 2,693,791.

Mar. 18 Filed Defendant's Notice of Prior Public use and sale of certain patents in addition to that heretofore noticed.

Apr. 1 Filed Defendant's Answers to Plaintiff's Interrogatories.

Apr. 11 Filed and entered Court Order made this date changing the hour of trial to 1:30 o'clock P.M. on April 18, 1955, instead of 10:00 o'clock A.M. on that date.

Apr. 11 Attested copy of above Order mailed this date to all counsel of record.

Apr. 12 Filed Defendant's Notice of Additional Prior Art; with endorsement thereon showing receipt of copy by Plaintiff's counsel on April 11, 1955.

Apr. 18 Filed and entered Court Order made this date as to record of Transcript.

Apr. 18 Filed and entered Court Order made this date as to record of Claims in connection with United States Letters Patent No. 2,605,753.

Apr. 19 Attested copies of last two above-noted Orders delivered to all counsel.

April 18, 19, 20, 21 & 22, 1955. COURT TRIAL.

Apr. 20 Filed and entered Court Order made this date granting Plaintiff leave to file its proffered Supplemental Complaint.

Apr. 20 Filed Plaintiff's Supplemental Complaint.

Apr. 22 Filed and entered Court Order made this date as to submission.

Apr. 22 Attested copies of last two above-noted Orders were mailed to Plaintiff's counsel, and delivered to Defendant's counsel.

Apr. 22 Filed Plaintiff's Exhibits 1, 1a, 1b, 2, 2a, 2b, 3, 3a, 3b, 3c, 3d, 4, 5, 6, 7, 8, 9, 10, 11, 12, 13, 14, 14a, 14b, 14c, 14d, 14d prime, 14e, 14f, 15, 15a, 15b, 15c, 15d, 15e, 15f, 16, 16a, 16b, 16c, 16d, 17a, 17b, 17c, 17d, 18a, 18b, 18c, 19, 20a, 20b, 20c, 20d, 21a, 21b, 21c, 21d, and 22.

Apr. 22 Filed Defendant's Exhibits D-2, (following have prefix D), 3, 4, 5, 6, 7, 8, 9, 10, 11, 12, 13, 14, 15, 16, 17, 18, 19, 20, 21, 22, 23, 24, 25, 26, 27, 28, 29, 30, 31, 32, 33, 34, 35, 36, 37, 38, 39, 40, 41, 42, 43, 44, 45, 46, 47, 48, 49, 50, 51, 52, 53, 54, 55, 56, 57, 58, 59, 60, 61, 62, 63, 64, 65, 66, 67, 68 and 69.

May 2 Received and filed Deposition of Arthur Eaton and George Rose, witnesses called by the Defendant, taken before Bernard W. Nycz, Notary Public, within and for the County of Wayne, State of Michigan, on Thursday, March 24, 1955.

Aug. 18 Filed Plaintiff's Brief.

Sept. 12 Filed Defendant's Brief.

Sept. 20 Filed Stipulation of parties regarding corrections to transcript of record.

Sept. 23 Filed Second Stipulation of parties regarding corrections to transcript of record.

Sept. 27 Filed Rebuttal Brief for the Plaintiff; with acceptance of service of copy endorsed thereon by Defendant's counsel on Sept. 27, 1955.

Sept. 30 Filed and entered Memorandum by the Court requesting counsel to advise the Court of any conflicting engagements during second or third weeks of December in connection with fixing time for oral arguments at Dubuque.

Sept. 30 Attested copies of above Memorandum mailed this date to all counsel of record.

Oct. 3 Filed Transcript (in 2 Volumes) of proceedings at the trial of this cause, started April 18, 1955, certified by Arthur L. Bye, Official Court Reporter.

Nov. 29 Filed and entered Court Order made this date assigning Oral Arguments for hearing at Dubuque, Iowa, on Wednesday, December 21, 1955 at 1:30 o'clock P.M.

Nov. 29 Attested copy of above Order mailed this date to all counsel of record.

Dec. 21 Filed and entered Court Order made this date taking this case under advisement.

Dec. 23 Attested copies of above Order mailed this date to all counsel of record.

1956

Jan. 10 Filed Proposed Findings of Fact and Conclusions of Law Suggested by Defendant.

Mar. 12 Filed and entered Findings of Fact, Conclusions of Law, and Order for Judgment rendered by Judge Graven on March 12, 1956.

Mar. 12 Filed and entered Judgment rendered by Judge Graven on March 12, 1956 declaring that: Claim 5 of U.S. Patent No. 2,605,573 issued August 5, 1952 to Dorothy H. Madle, Administratrix of estate of Alain M. Madle is invalid; that claims 1, 2, 4, and 5, the latter two, as corrected, of U.S. Patent No. 2,699,791 issued Nov. 9, 1954, to Leo J. Lechtenberg are invalid; and Claims 1, 2, 4, 5, 6, 7, 8, 14, 15 and 16 of U. S. Patent No. 2,693,789 issued November 9, 1954 to Leo J. Lechtenberg are valid; that such claims are infringed by Defendant's accused V. S. 100 engine; that Plaintiff have Judgment against Defendant for damages and profits for such infringement, such damages and profits to be later determined, the Court to retain jurisdiction for making such determination; Defendant enjoined and restrained from infringing those claims; no award of attorney fees to be made to either party; each party to pay one-half taxable costs taxed; proceedings under said Judgment to be stayed until April 16, 1956.

Mar. 12 Entered Judgment this date for one-half costs against each party.

Mar. 12 Attested copy of Findings of Fact, Conclusions of Law, and Order for Judgment, and Judgment mailed to all counsel of record.

Mar. 12 Filed Copy of Report on Form 789 mailed to Commissioner of Patents, Washington, D. C. as to Judgment rendered by Court on March 12, 1956.

Mar. 21 Filed Defendant's Motion for Clarifying the Opinion, with Proof of Service endorsed thereon.

Mar. 21 Filed Defendant's Motion for Additional Findings of Fact with Proof of Service endorsed thereon.

Mar. 21 Filed Defendant's Petition for a New Trial with Proof of Service endorsed thereon.

Mar. 21 Filed Defendant's Motion for Extending Effective Date of Judgment until June 16, 1956 with Proof of Service endorsed thereon.

Mar. 21 Filed Defendant's Motion to Amend Judgment with Proof of Service endorsed thereon.

Mar. 22 Filed and entered Court Order made this date assigning Defendant's Motions for hearing at Dubuque, Iowa, on April 4, 1956 at 4:00 o'clock P.M.

Mar. 22 Attested copy of above Order mailed this date to all counsel of record.

Mar. 23 Filed Notice of Withdrawal of Appearance of Thos. S. Donnelly as attorney for Defendant with approval by the Court noted thereon.

Mar. 23 Filed Appearance of Edwin J. Balluff, 3153 Penobscot Building, Detroit 26, Michigan, as counsel for Defendant, with Proof of service showing copy mailed to Plaintiff's Counsel.

Mar. 31 Filed Affidavit of Rudolph L. Lowell, of Des Moines, Iowa, with copies of Bosma patent No. 2,346,148, and Van Sickle patent No. 615,766 attached thereto and made a part thereof.

Apr. 2 Filed Appearance of Arthur Raisch, 1509 Ford Building, Detroit 26, Michigan, as attorney for Defendant, with Proof of Service noted thereon.

Apr. 2 Filed Defendant's Motion to Relieve Defendant from the Judgment and Order of March 12, 1956, based on Lechtenberg United States Letters Patent No. 2,693,789.

and

Motion for a New Trial with respect to the matter of validity and infringement of Lechtenberg United States Letters Patent No. 2,693,789, to permit the Defendant to present new evidence, with Proof of Service attached thereto.

Apr. 2 Filed Affidavit of Cletus Erlacher of Maquoketa, Iowa.

Apr. 2 Filed Affidavit of LaVerne Socks of Maquoketa, Iowa.

Apr. 2 Filed Affidavit of Harold Bruns of New Holstein, Wisconsin.

Apr. 4 Filed Plaintiff's Memorandum re Defendant's Motions after Judgment.

Apr. 4 Filed Appearance of Wayne G. Cook for Cook, Blair & Balluff, Putnam Building, Davenport, Iowa, as counsel for Defendant.

Apr. 4 Filed Affidavit of Joseph L. Forinash.

Apr. 4 Filed Affidavit of Richard W. Muerle.

Apr. 4 Filed Affidavit of Paul W. Hainke.

Apr. 4 Filed Affidavit of Kenneth Agar.

Apr. 4 Filed Affidavit of Clarence P. Damon.

Apr. 4 Filed Memorandum in support of Defendant's Motions.

Apr. 4 Filed Memorandum in support of Defendant's Motion for Additional Findings of Fact.

Apr. 4 Filed and entered Court Order made this date taking under advisement Defendant's post-judgment motions.

Apr. 6 Attested copy of last above-noted Order mailed this date to all counsel of record.

Apr. 9 Filed Plaintiff's Memorandum Waiving Certain Objections to Defendant's Motion for a New Trial.

Apr. 9 Filed and entered Court Order made this date setting aside in its entirety Judgment heretofore entered on March 12, 1956; granting leave to both parties to present additional evidence as to any or all issues as to all patents, including issue as to infringement; assigning this matter for hearing of additional evidence at Dubuque, Iowa, on June 4, 1956 at 10 o'clock A.M.; and overruling and denying those motions of Defendant which are not granted or rendered moot by this Order.

Apr. 9 Attested copy of above-noted Order mailed this date to all counsel of record.

Apr. 10 Filed Certificate of Service of E. Marshall Thomas, of counsel for Plaintiff, showing copy of Plaintiff's Memorandum Waiving Certain Objections to Defendant's Motion for New Trial mailed to counsel for Defendant on April 9, 1956.

May 31 Filed Original and Duplicate of Deposition of Harold E. Bruns taken on behalf of Defendant before Stanley H. Enockson, Notary Public, at New Holstein, Wisconsin, on May 25, 1956.

May 31 Filed original and Duplicate of Deposition of W. C. Conover taken on behalf of Plaintiff before Helen Ruud, Notary Public at Milwaukee, Wisconsin, on May 29, 1956.

June 4 Filed and entered Court Order made this date as to Transcripts to be furnished by Court Reporter.

June 4 Filed and entered Court Order made this date appointing Carl V. Riley, Relief Reporter, in this case.

June 4 Filed and entered Court Order made this date dismissing the claims of Plaintiff based upon Lechtenberg Patent No. 2,693,791, referred to as the second Lechtenberg Patent.

June 5 Attested copies of last above three Orders delivered this date to all counsel of record by Lee McNeely, Clerk.

June 6 Filed Reporter's Transcript of proceedings at hearing on Defendant's Motions at Dubuque, Iowa, on April 4, 1956 certified by Arthur L. Bye, Official Court Reporter.

June 6 Filed and entered Court Order made this date relating to submission of case.

June 6 Filed and entered Court Order made this date fixing compensation in the sum of $50.00 for Relief Reporter, and directing that the same be included in the taxable costs.

COURT TRIAL June 4, 5, and 6 at Dubuque, Iowa.

June 7 Attested copies of last two Orders mailed this date to all counsel of record.

Aug. 2 Received and Filed Reporter's Transcript, in three volumes, of Additional Testimony of Trial to Court

on June 4, 5, 6, 1956 certified by Arthur L. Bye, Official Federal Court Reporter and by Carl V. Riley, Assistant Official Federal Court Reporter.

Aug. 14 Filed Letter from Carl V. Riley, Assistant Official Federal Court Reporter, amending transcript of proceedings of Court Trial at Page 496, Line 15.

Aug. 21 Filed Defendant's Brief.

Aug. 25 Filed Affidavit of Florence M. Chamberlin showing two copies of Defendant's Brief mailed to Ira Milton Jones, 110 E Wisconsin Avenue, Milwaukee 2, Wisconsin, and to E. Marshall Thomas, 609 Bank and Insurance Building, Dubuque, Iowa, on August 17, 1956.

Sept. 7 Filed Plaintiff's Reply Brief on Additional Evidence.

Sept. 14 Filed Original and Duplicate of Defendant's Reply Brief.

Sept. 17 Filed and entered Court Order made this date assigning Oral Arguments in this case for hearing at Dubuque, Iowa, on October 1, 1956 at 2:00 o'clock P.M.

Sept. 18 Attested copies of above-noted Order mailed this date to all counsel of record.

Oct. 1 Received and Filed Court Reporters' File Copy of Transcript, in three volumes, of Additional Testimony of Trial to Court on June 4, 5, 6, 1956.

Oct. 1 Filed Defendant's Proposed Findings of Fact and Conclusions of Law.

Oct. 1 Filed and entered Court Order made this date taking this case under advisement after oral arguments heard at Dubuque this date.

Oct. 2 Attested copy of above Order mailed this date to all counsel of record.

Dec. 8 Filed two Stipulations of the parties through their counsel of correction to transcript of oral arguments had on October 1, 1956.

Dec. 8 Filed Reporter's Transcript of oral arguments had on October 1, 1956.

Dec. 31 Filed and entered Findings of Fact, Conclusions of Law, and Order for Judgment on December 31, 1956.

Dec. 31 Filed and entered Judgment rendered by Judge Graven on December 31, 1956 declaring that: Claim 5 of U.S. Patent No.2605573 issued August 5, 1952 to Dorothy H. Madle, Administratrix of the Estate of Alain M. Madle is invalid; that Claims 1, 2, 4, 5, 6, 7, 8, 14, 15 and 16 of U.S. Patent No. 2,693,789, issued November 9, 1954, to Leo J. Lechtenberg are invalid; no award of attorney fees to be made to Defendant; each party to pay one-half taxable costs taxed in the sum of $ .....

Dec. 31 Attested copy of Findings of Fact, Conclusions of Law, and Order for Judgment, and Judgment sent to counsel.

Dec. 31 Entered Judgment this date for one-half costs against each party.

1957

Jan. 5 Filed Copy of Report on Form AO 120 mailed to Commissioner of Patents, Washington, D. C. as to Judgment rendered by Court on December 31, 1956.

Jan. 25 Filed Plaintiff's Notice of Appeal to Court of Appeals.

Jan. 26 Filed Stipulation of the Parties through their counsel that Plaintiff-Appellant be relieved from the necessity of filing with the U.S. Court of Appeals for the 8th Circuit a cost bond on Appeal, with Court Order approving same.

Jan. 29 Filed Clerk's Certificate of Mailing copies of Plaintiff's Notice of Appeal to Attorneys of Record for Defendant.

Jan. 30 Filed Defendant's Notice of Cross-Appeal.

Jan. 31 Filed Clerk's Certificate of Mailing Copies of Notice of Cross-Appeal to Attorneys of Record for Cross-Appellee.

Feb. 5 Filed Plaintiff-Appellant's Designation of Contents of Record on Appeal.

Feb. 5 Filed Affidavit in Proof of Service of Plaintiff's Designation of Contents of Record on Appeal on counsel representing Defendant, on February 4, 1937.

Feb. 6 Filed Plaintiff-Appellant's Designation of Contents of Printed Record with proof of service endorsed thereon.

LIBRARY
SUPREME COURT, U. S.

Office Supreme Court, U.S.
FILED
DEC 4 1957
JOHN T. FEY, Clerk.

No. 640

RECORD

United States Court of Appeals

FOR THE EIGHTH CIRCUIT

Nos. 15,725 and 15,729
CIVIL

BRIGGS & STRATTON CORPORATION,
Appellant,

vs.

CLINTON MACHINE CO., INC.,
Appellee.

CLINTON MACHINE CO., INC.,
Cross-Appellant,

vs.

BRIGGS & STRATTON CORPORATION,
Cross-Appellee.

Appeals from the United States District Court for the Northern District of Iowa

VOLUME III
Patent Copies

HAMMERSMITH-KORTMEYER CO.
MILWAUKEE

INDEX TO VOLUME III

NUMERICAL INDEX TO PATENTS

Patent No.	*Patentee*	*Page*
615,766	Vansickle	P-1
740,781	Sturtevant	P-11
780,221	Packard	P-25
798,992	Cochran	P-33
810,963	Motsinger	P-37
816,083	Farwell	P-45
857,715	Brillié	P-55
863,151	Churchill	P-61
906,290	Riker	P-65
1,224,247	Wacker	P-77
1,239,689	Heaslet	P-85
1,242,985	Sawtelle	P-101
1,265,454	Kettering et al	P-111
1,276,891	Felix	P-115
1,281,204	Pitts	P-125
1,291,216	Smith	P-135
1,401,058	Erickson	P-151
1,427,718	Brown	P-157
1,430,524	Kettering	P-167
1,447,245	Gore	P-173
1,463,958	Kettering	P-181
1,465,644	Kettering	P-189
1,636,017	Smith	P-195
1,736,441	Hendrickson	P-205
1,792,089	Hardman	P-221
1,904,308	Harmon	P-227
1,983,072	Davis	P-245

Patent No.	*Patentee*	*Page*
2,013,541	Littlefield	P-257
2,097,662	Hennecke et al	P-261
2,157,666	Jacobi	P-273
2,215,106	Lefebvre	P-281
2,218,332	Fowler	P-287
2,227,247	Conover	P-297
2,249,319	Löhner	P-315
2,256,002	Molnar	P-323
2,305,186	Muenk	P-331
2,346,148	Bosma	P-335
2,357,942	Farr	P-345
2,375,718	Winkels et al	P-353
2,388,994	Phelon	P-359
2,404,833	Forster	P-365
2,417,195	Hargreaves	P-369
2,424,416	Piry	P-377
2,511,823	Klotsch	P-389
2,559,079	Leja	P-407
2,569,461	Dingman	P-411
2,583,466	Brownlee	P-421
2,590,134	Slonneger	P-435
2,605,753	Madlé	P-457
2,606,541	Lutz	P-475
2,627,940	Bakke	P-483
2,630,881	Bosma	P-491
2,669,322	Brown	P-501
2,693,789	Lechtenberg	P-509
2,693,791	Lechtenberg	P-535

FOREIGN PATENTS

Patent No.	*Patentee*	*Page*
310,082	Pullin et al	P-547
32,802	Bilthovensche Metallindustrie	P-553

ALPHABETICAL INDEX TO PATENTEES

Patentee	*Patent No.*	*Page*
Bakke	2,627,940	P-483
Bilthovensche	32,802	P-553
Bosma	2,346,148	P-335
Bosma	2,630,881	P-491
Brown	1,427,718	P-157
Brown	2,669,322	P-501
Brownlee	2,583,466	P-421
Brillié	857,715	P-55
Churchill	863,151	P-61
Cochran	798,992	P-33
Conover	2,227,247	P-297
Davis	1,983,072	P-245
Dingman	2,569,461	P-411
Erickson	1,401,058	P-151
Farr	2,357,942	P-345
Farwell	816,083	P-45
Felix	1,276,891	P-115
Forster	2,404,833	P-365
Fowler	2,218,332	P-287
Gore	1,447,245	P-173
Hardman	1,792,089	P-221

Patentee	*Patent No.*	*Page*
Hargreaves	2,417,195	P-369
Harmon	1,904,308	P-227
Heaslet	1,239,689	P-85
Hendrickson	1,736,441	P-205
Hennecke et al	2,097,662	P-261
Jacobi	2,157,666	P-273
Kettering et al	1,265,454	P-111
Kettering	1,430,524	P-167
Kettering	1,463,958	P-181
Kettering	1,465,644	P-189
Klotsch	2,511,823	P-389
Lechtenberg	2,693,789	P-509
Lechtenberg	2,693,791	P-535
Lefebvre	2,215,106	P-281
Leja	2,559,079	P-407
Littlefield	2,013,541	P-257
Löhner	2,249,319	P-315
Lutz	2,606,541	P-475
Madlé	2,605,753	P-457
Molnar	2,256,002	P-323
Motsinger	810,963	P-37
Muenk	2,305,186	P-331
Packard	780,221	P-25
Phelon	2,388,994	P-359
Piry	2,424,416	P-377
Pitts	1,281,204	P-125
Pullin	310,082	P-547
Riker	906,290	P-65
Sawtelle	1,242,985	P-101

Patentee	*Patent No.*	*Page*
Slonneger	2,590,134	P-435
Smith	1,291,216	P-135
Smith	1,636,017	P-195
Sturtevant et al	740,781	P-11
Vansickle	615,766	P-1
Wacker	1,224,247	P-77
Winkels et al	2,375,718	P-353

No. 615,766. Patented Dec. 13, 1898.

A. A. VANSICKLE.

GAS ENGINE.

(Application filed Apr. 27, 1897.

(No Model.) 3 Sheets—Sheet 1.

Fig. 1.

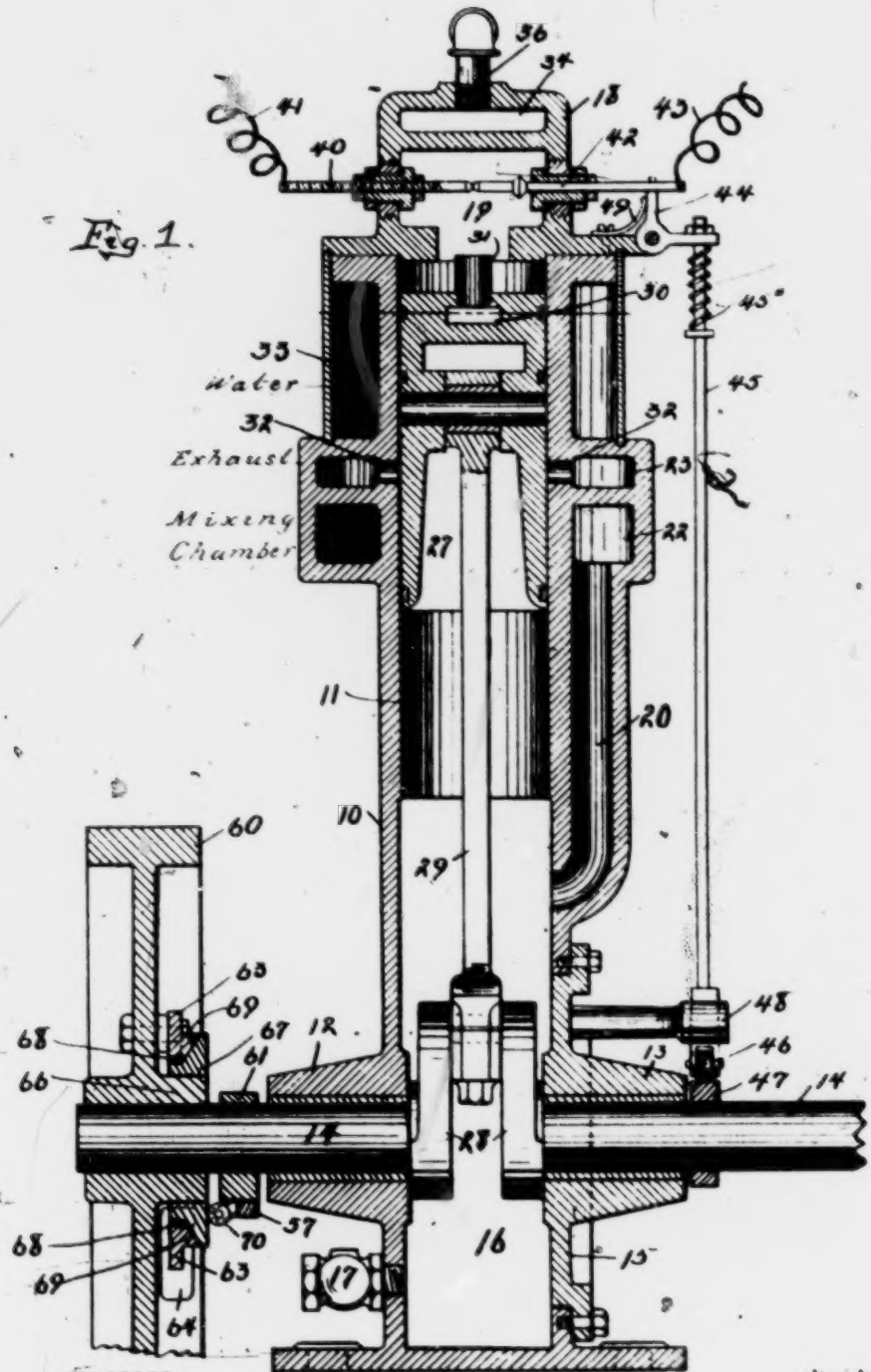

WITNESSES

Frank A. Fahle.

INVENTOR

Alexander A. Vansickle

BY

Arthur B. Hood

ATTORNEY.

No. 615,768. Patented Dec. 13, 1898.

A. A. VANSICKLE.

GAS ENGINE.

(Application filed Apr. 27, 1897.)

(No Model.) 3 Sheets—Sheet 2.

Fig. 2.

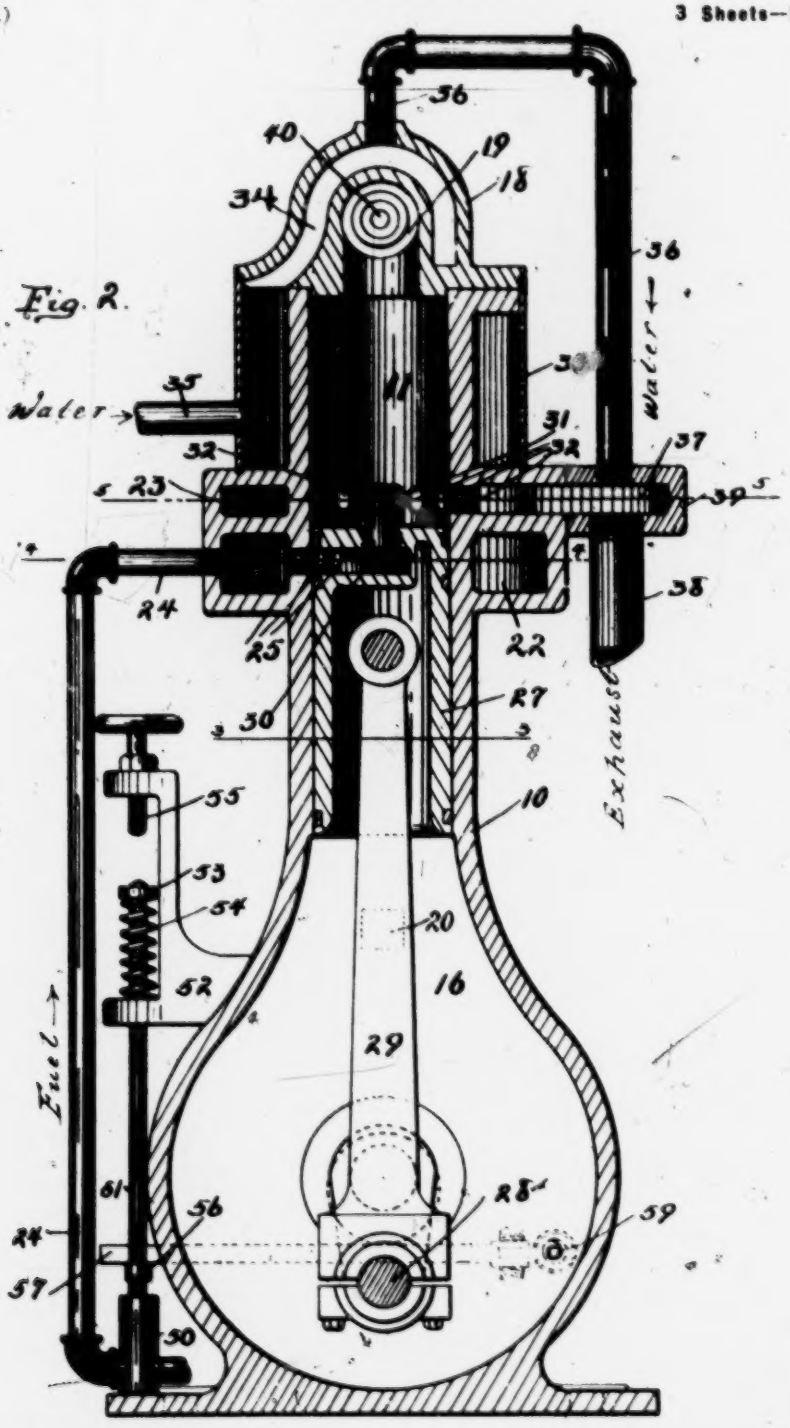

WITNESSES
Frank Fahle
W. C. Jones

INVENTOR
Alexander A. Vansickle
BY
Arthur M. Hood
ATTORNEY

No. 615,766. Patented Dec. 13, 1898.

A. A. VANSICKLE.

GAS ENGINE.

Application filed Apr. 27, 1897.

(No Model.) 3 Sheets—Sheet 3.

Fig. 5.

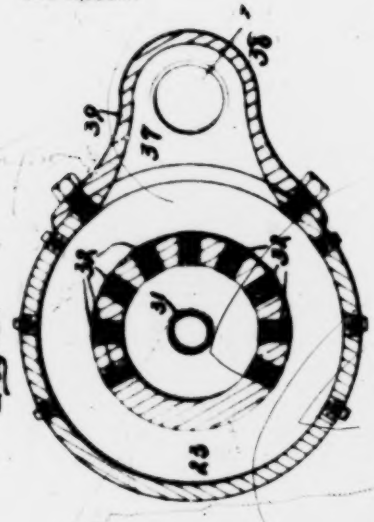

Fig. 7.

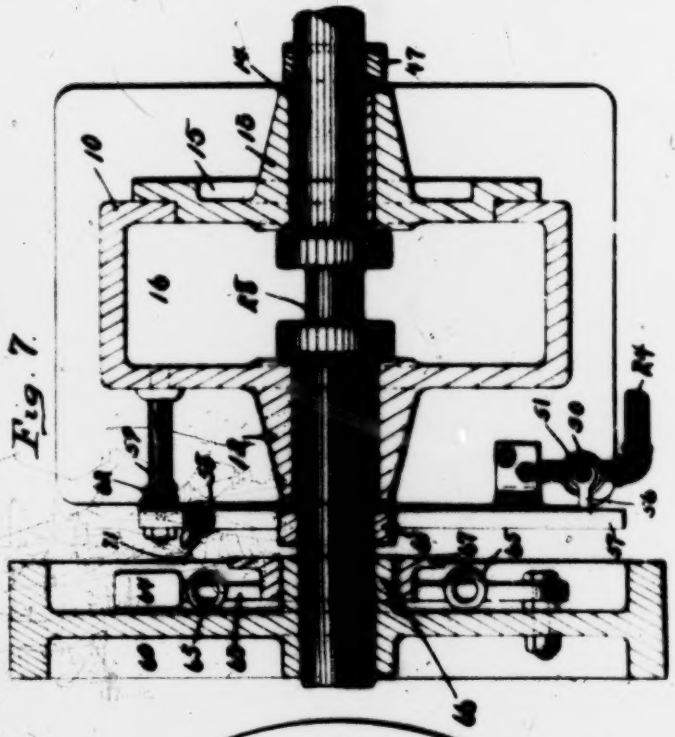

Fig. 4.

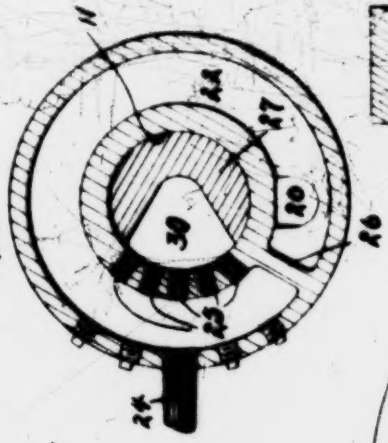

Fig. 3.

Fig. 6.

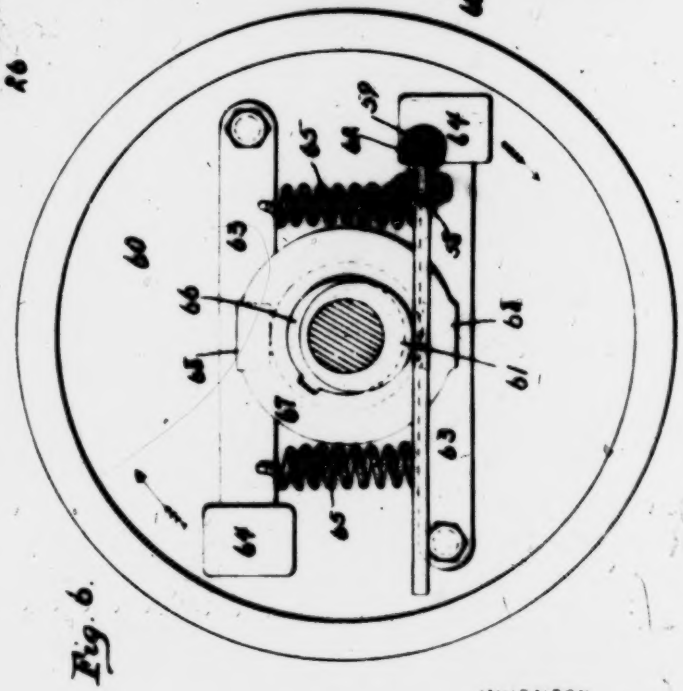

WITNESSES

Frank A. Fahle

C. G. Jones

INVENTOR

Alexander A. Vansickle.

BY

Arthur M. Hood

ATTORNEY

UNITED STATES PATENT OFFICE.

ALEXANDER A. VANSICKLE, OF INDIANAPOLIS, INDIANA, ASSIGNOR OF TWO-THIRDS TO THOMAS MORRIS DEFREES, OF SAME PLACE.

GAS-ENGINE.

SPECIFICATION forming part of Letters Patent No. 615,766, dated December 13, 1898.

Application filed April 27, 1897. Serial No. 634,100. (No model.)

To all whom it may concern:

Be it known that I, ALEXANDER A. VANSICKLE, a citizen of the United States, residing at Indianapolis, in the county of Marion and State of Indiana, have invented certain new and useful Improvements in Gas-Engines; and I do declare the following to be a full, clear, and exact description of the invention, such as will enable others skilled in the art to which it appertains to make and use the same, reference being had to the accompanying drawings, and to the figures of reference marked thereon, which form a part of this specification.

My invention relates to an improvement in gas-engines.

The objects of my invention are to produce an engine in which the movement of the piston will operate to open and close the exhaust and admission ports, to provide means for allowing a rapid exhaust, to provide means by which the explosive mixture may be heated prior to its admission into the cylinder by the exhaust-gases, to provide an improved form of governor to regulate the flow of gas or petroleum, and to provide the various details of construction hereinafter pointed out.

The accompanying drawings illustrate my invention.

Figure 1 is a central vertical section parallel with the crank-shaft. Fig. 2 is a similar section at right angles to the crank-shaft. Fig. 3 is a horizontal section on line 3 3, Fig. 2. Fig. 4 is a similar section on line 4 4, Fig. 2. Fig. 5 is a similar section on line 5 5, Fig. 2. Fig. 6 is a side elevation of the governor. Fig. 7 is a horizontal section through the crank-shaft.

In the drawings, 10 indicates a casting the upper end of which is bored out to form the cylinder 11. Formed near the lower end of casting 10 are two bearings 12 and 13, which are adapted to receive the crank-shaft 14, one of said bearings being preferably carried by a cap 15, bolted to one side of casting 10, the arrangement being such that by removing cap 15 the interior of the casting 10 may be reached and the various portions of the crank-shaft and attached parts may be easily assembled. The lower portion of casting 10 forms a chamber 16, which is air-tight, and for the purpose of admitting air to the interior thereof I provide a check-valve 17. The upper end of cylinder 11 is closed by a cap 18, provided with a chamber 19, communicating with the interior of the cylinder and in which the igniting means is mounted.

Leading from chamber 16 up alongside the lower end of cylinder 11 to about the middle thereof is an air-duct 20, the upper end of which opens into an annular mixing-chamber 22, which surrounds the cylinder. Immediately above chamber 22 is a similar chamber 23, into which the exhaust is discharged, the arrangement being such that the heat from the exhaust-gases will serve to heat the material within the mixing-chamber 22. Leading into chamber 22 at a point about ninety degrees from the air-duct 20 is a pipe 24, which is connected with any suitable supply of fuel.

It will be understood, of course, that within pipe 24 may be mounted any suitable spraying device in case a liquid fuel is used. Leading through the walls of cylinder 11 at a point opposite the inner end of pipe 24 is a series of openings 25, and placed between these openings and the air-duct 20 is a partition 26, the arrangement being such that the air from duct 20 must pass entirely around the cylinder before reaching openings 25.

Mounted within cylinder 11 is a piston 27, which is connected with the crank 28 of crank-shaft 14 by means of a pitman 29. Formed in the upper end of piston 27, a short distance from the end and at right angles to the axis thereof, is a V-shaped slot 30, the inner end of which extends to the center of the piston, the arrangement being such that the outer wider end embraces and communicates with the inner ends of openings 25 when the piston is at the end of its forward stroke. Secured to the top of piston 27 and communicating with the inner end of slot 30 is a pipe 31, the purpose of which will be made to appear.

Leading from the interior of cylinder 11 into chamber 23 is a series of exhaust-ports 32, which are placed as near together as possible around the circumference of the cylinder, with the exception of the short space along which the mouth of slot 30 travels.

Around the upper end of cylinder 11 is

formed a water-jacket 33, the upper end of which communicates with a water-space 34, formed in cap 18 and surrounding chamber 19. Leading into jacket 33 is a suitable supply-pipe 35, and leading from space 34 is a discharge-pipe 36. For the purpose of forcing the exhaust-gases from the chamber 23 the said chamber is extended, as at 37, and the outer end of pipe 36 leads therein. Opposite pipe 36 and leading from chamber 37 is a discharge-pipe 38, which is of considerably larger diameter than pipe 36 and is adapted to receive the exhaust-gases and the discharged water from the water-jackets, the arrangement being such that the passage of the water through chamber 37 draws the gases from chamber 23. Extension 37 may be formed integral with chamber 36, or it may be formed by means of a cap 39, bolted to the side of said chamber.

Leading into chamber 19 and insulated therefrom is an adjustable electrode 40, connected by wire 41 with any suitable battery, and leading into chamber 19, opposite electrode 40, is a sliding electrode 42, connected by wire 43 with said battery. Electrode 42 may be longitudinally moved through its bearings and alternately brought into contact with and separated from electrode 40 by means of a lever 44, to one arm of which is secured a rod 45, on the lower end of which is mounted a roller 46, which rests upon a cam 47, carried by the crank-shaft 14. Rod 45 is supported by a suitable bearing 48, and mounted between the said arm and the lever 44 is a spring 45', which will yield when the ends of the electrodes are in engagement. Roller 46 is held in engagement with cam 47 by means of a spring 49, which engages one arm of lever 44.

For the purpose of automatically regulating the amount of fuel supplied to the cylinder I mount at a convenient point in pipe 24 a pump 50, to the piston of which is secured a rod 51, the upper end of which is supported by a suitable bearing 52, between which and a collar 53, carried by the upper end of rod 51, is mounted a spring 54, which tends to normally hold the piston at the extreme of its backward stroke. In order to regulate the movement of the piston of the pump, I provide an adjustable stop 55, adapted to engage the upper end of rod 51. Secured to the rod 51 is a step 56, which is engaged by the outer end of a lever 57. Lever 57 is provided with a joint 58, allowing the outer end to swing in a plane parallel with the step 56, and the said lever is pivoted at 59, so as to swing in a plane parallel with the pump piston-rod and also parallel with the side of a fly-wheel 60, secured to shaft 14. Lever 57 lies at right angles to shaft 14 and is engaged by a cam 61, secured thereto, being held in engagement with said cam by means of a spring 62, placed, if desired, around pivot 59. Pivoted to wheel 60, so as to swing in a plane at right angles to shaft 14, are two arms 63, each provided at its outer end with a weight 64. The pivotal points of arms 63 are diametrically opposed, and the two arms are connected together by a pair of spiral springs 65, the said springs opposing any outward-swinging movement of the arms. Arms 63 pass upon opposite sides of hub 66 of wheel 60, and keyed on this hub and longitudinally movable thereon is a collar 67, provided with a pair of diametrically-located inclined recesses 68, in each of which rests an inclined lug 69, carried one by each of arms 63, the arrangement being such that as the outer ends of arms 63 swing outward collar 37 may be forced outward away from cam 61. For the purpose of causing this movement of collar 67 lever 57 is provided with a roller 70, which engages the outer side of collar 67, and a suitable spring 71 is provided to force said roller against the collar. Spring 71 may be placed around the pivot of joint 58, or, if desired, it may be secured to the casting 10, with its free end in engagement with lever 57.

The operation is as follows: The piston being caused to descend in the cylinder, the air in chamber 16 is forced through duct 20 into chamber 22 and around the cylinder. At the same time, slot 30 having been brought opposite openings 25, lever 57 is forced by cam 61 into engagement with step 56 and the piston of the pump 50 is forced forward against the action of spring 54, thus forcing a charge of fuel through pipe 24 and into the mixing-chamber, where it becomes mixed with the heated air already in said chamber, and owing to the pressure of the air within chamber 16 and the mixing-chamber 22, with which it is at all times in communication, the mixture is forced through openings 25 into slot 30 and from there up through pipe 31 into the upper end of cylinder 11, the mixture also rising into chamber 19 around the electrodes 40 42. A continued movement of the crank-shaft causes the piston to move upward, thus closing openings 25 and compressing the mixture in the upper end of the cylinder. When the piston reaches the end of its backward stroke, the electrodes 40 42, which have been previously brought together by the action of cam 47, rod 45, and lever 44, are suddenly separated by the action of said parts, a spark is formed, and the compressed mixture is exploded, thus driving the piston forward. During the backward stroke of the piston a fresh quantity of air is drawn into chamber 16 through check-valve 17, and the pump-piston is returned to its normal position by spring 54. As the piston passes forward and nears the end of its forward stroke the exhaust-ports 32 are uncovered and the exploded gases are quickly discharged therethrough into the exhaust-chamber 23, from which they pass to pipe 38. A continued movement of the piston brings the outer end of slot 30 opposite openings 25, the piston of pump 50 is again operated by the action of cam 61 and lever 57, and a fresh charge of

fuel and air is forced through openings 25, slot 30, and pipe 31. The continued movement of the crank-shaft carries the piston back, the admission and exhaust ports are closed thereby, the mixture in the upper end of cylinder 11 is compressed, a fresh supply of air is drawn into chamber 16, and the operation is repeated. As the speed of the engine increases the weighted ends of arms 63 fly outward, thus partially withdrawing lugs 69 from recesses 68, so that collar 67 may be forced outward by lever 57 and spring 71, this movement, if sufficient, allowing the outer end of lever 57 to swing away from step 56 and miss it as the lever is forced downward by the cam 61. It will be understood, of course, that if gas under pressure be used instead of a liquid fuel a valve may be substituted for pump 50.

It is to be noticed that pipe 31 extends slightly above the exhaust-ports 32 and that it is located substantially in the axis of the cylinder, so that the incoming fuel does not become appreciably mixed with the outgoing dead gases. Again, the exhaust-ports leading into a chamber of comparatively large capacity and the said ports leading from all points around the circumference of the cylinder the exhaust is very rapid and noiseless and the greater portion of the dead gas passes into the exhaust-chamber before the piston passes forward enough to open the admission-ports and allow the entrance of the fresh mixture.

I claim as my invention—

1. In a gas-engine, the combination with the cylinder and the piston, of an exhaust-chamber surrounding the cylinder, ports leading from said cylinder into said chamber and arranged to be opened and closed by the piston, a mixing-chamber surrounding the cylinder, and ports leading from said chamber into the cylinder and arranged to be opened and closed by the piston, substantially as described.

2. In a gas-engine, the combination with the cylinder and the piston, of an exhaust-chamber surrounding the cylinder, ports leading from said cylinder into said chamber and arranged to be opened and closed by the piston, a mixing-chamber surrounding the cylinder immediately beneath the exhaust-chamber, and ports leading from said mixing-chamber into the cylinder and arranged to be opened and closed by the piston, substantially as described.

3. In a gas-engine, the combination with the cylinder, of an annular exhaust-chamber surrounding the cylinder, and an annular mixing-chamber surrounding the cylinder and placed adjacent the exhaust-chamber, the arrangement being such that the contents of the mixing-chamber will be heated by the exhaust, substantially as described.

4. In a gas-engine, the combination with the cylinder and piston, of an air-chamber formed upon one side of said piston, an annular mixing-chamber surrounding the cylinder and in constant communication with said air-chamber, means for introducing fuel into said mixing-chamber, a port leading from said mixing-chamber into the cylinder, the arrangement being such that the port will be opened and closed by the piston, and means for allowing the escape of the dead gas, substantially as described.

5. In a gas-engine, the combination with the cylinder and piston, of an air-chamber formed upon one side of said piston, an annular mixing-chamber surrounding the cylinder and in constant communication with the air-chamber, means for introducing fuel into said mixing-chamber, a port leading from said mixing-chamber into the cylinder, the arrangement being such that the port will be opened and closed by the piston, an annular exhaust-chamber adjacent the mixing-chamber and surrounding the cylinder, and a series of ports leading from the cylinder to said exhaust-chamber, substantially as and for the purpose set forth.

6. In a gas-engine, the combination with the cylinder and piston, of an air-chamber formed upon one side of the piston, a mixing-chamber in constant communication with said air-chamber, means for introducing fuel into said mixing-chamber, a port leading from said mixing-chamber into the cylinder, a slot formed in the periphery of the piston and leading into the piston, and a pipe forming a connection between the inner end of said slot and the interior of the cylinder, the arrangement being such that, when the piston is at one end of its stroke, the outer end of said slot will be brought opposite the port, substantially as described.

7. In a gas-engine, the combination with the cylinder and piston, of an air-chamber formed upon one side of the piston, an annular mixing-chamber surrounding the cylinder and in constant communication with said air-chamber, means for introducing fuel into said mixing-chamber, a port leading from said chamber into the cylinder, a slot formed in the periphery of the piston and leading into the piston, a pipe forming a connection between the inner end of the slot and the interior of the cylinder, the arrangement being such that, when the piston is at one end of its stroke, the outer end of said slot will be brought opposite the port, an annular exhaust-chamber surrounding the cylinder adjacent the mixing-chamber, and a series of ports leading from the cylinder into said exhaust-chamber, substantially as described.

8. In a gas-engine, the combination with an exhaust-chamber adapted to receive the exhaust from the engine-cylinder, and a water-jacket surrounding a portion of the cylinder, of a pipe leading from said water-jacket into said chamber, and a second pipe, mounted opposite the discharge end of said first pipe and leading from said chamber, the said

second pipe receiving the material passing through the first pipe, substantially as and for the purpose set forth.

9. In a gas-engine, the cylinder, a piston mounted therein, a mixing-chamber, one or more ports leading through the wall of the cylinder from the interior of said cylinder into said mixing-chamber, a V-shaped, substantially-radial slot formed in the piston, and a communicating passage between the inner end of said slot and the interior of the cylinder, the arrangement being such that, when the piston is at one end of its stroke, the outer end of said slot will lie opposite the said port or ports, substantially as described.

10. In a gas-engine, the combination with the crank-shaft, of a wheel rotated thereby, an arm pivoted to said wheel so as to swing in a plane at right angles to the shaft, a collar keyed to the shaft and longitudinally movable thereon, inclined coacting surfaces carried by said arm and collar, a lever adapted to engage said collar and hold it in engagement with the arm, a cam arranged to engage the lever and to operate the same at right angles to the movement of the collar, and fuel-controlling means arranged to be normally engaged by said lever, the arrangement being such that, when the arm swings outward, the lever will be withdrawn from engagement with said fuel-controlling means, substantially as described.

11. In a gas-engine, the combination with the crank-shaft, of a wheel rotated thereby, an arm pivoted to said wheel so as to swing in a plane at right angles to the shaft, a collar keyed to the shaft and longitudinally movable thereon, inclined coacting surfaces carried by said arm and collar, a lever pivoted to swing in a plane at right angles to the shaft, a joint in said lever allowing the outer end thereof to swing in a plane parallel with the shaft, means carried by the outer end of said lever for engaging the collar and for holding it in engagement with the arm, and fuel-controlling means arranged to be normally engaged by the outer end of said lever, the arrangement being such that, when the arm swings outward, the lever will be withdrawn from engagement with said fuel-controlling means, substantially as described.

In testimony whereof I affix my signature in presence of two witnesses.

ALEXANDER A. VANSICKLE.

Witnesses:
JNO. S. THURMAN,
D. D. DEANE.

No. 740,781. PATENTED OCT. 6, 1903.

T. L. & T. J. STURTEVANT.

ELECTRICAL SPARKING IGNITER FOR GAS ENGINES

APPLICATION FILED OCT. 9, 1901.

NO MODEL 5 SHEETS—SHEET 1.

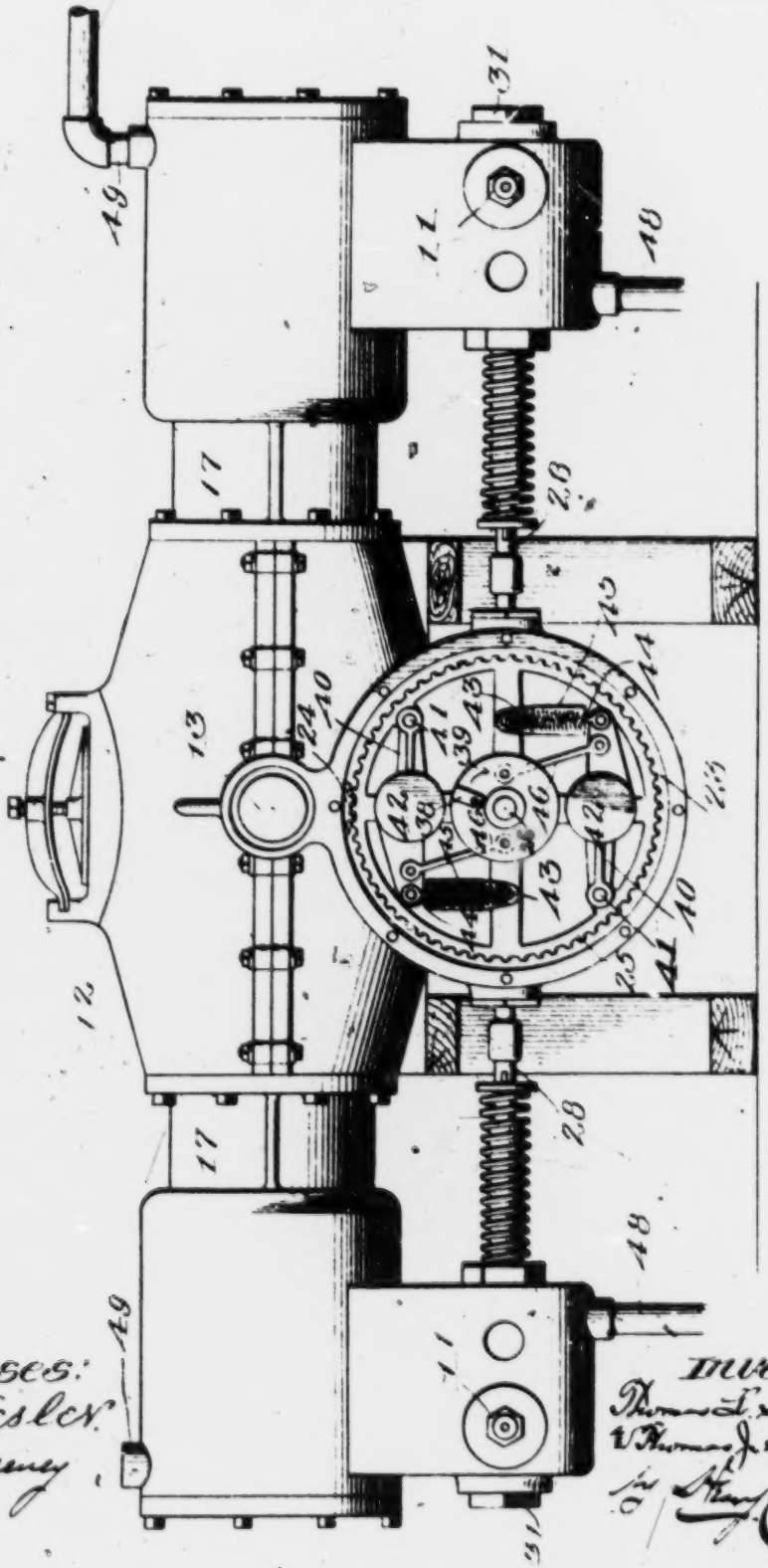

Fig. 1.

Witnesses:
C. D. Kesler
C. M. Sweeney

Inventors:
Thomas L. Sturtevant
& Thomas J. Sturtevant,
by Henry Calver
Atty.

No. 740,781. PATENTED OCT. 6, 1903.

T. L. & T. J. STURTEVANT.

ELECTRICAL SPARKING IGNITER FOR GAS ENGINES.

APPLICATION FILED OCT. 9, 1901.

NO MODEL. 5 SHEETS—SHEET 2.

Fig. 2.

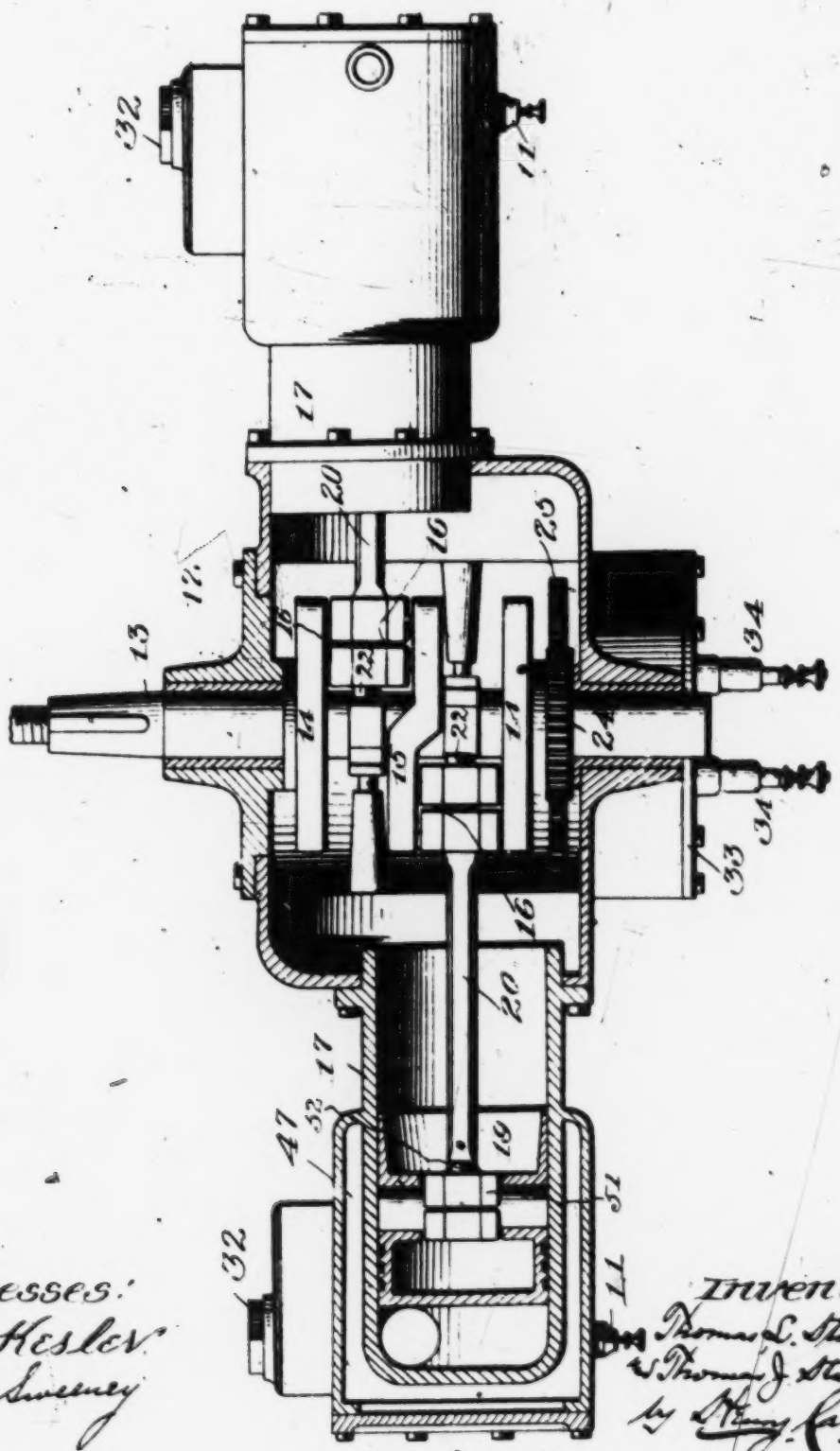

Witnesses:
Chas. D. Kesler
C. M. Sweeney

Inventors:
Thomas L. Sturtevant
& Thomas J. Sturtevant
by Henry Calvert
Atty.

No. 740,781. PATENTED OCT. 6, 1903.

T. L. & T. J. STURTEVANT.

ELECTRICAL SPARKING IGNITER FOR GAS ENGINES.

APPLICATION FILED OCT. 9, 1901.

NO MODEL. 5 SHEETS—SHEET 3.

Fig. 3.

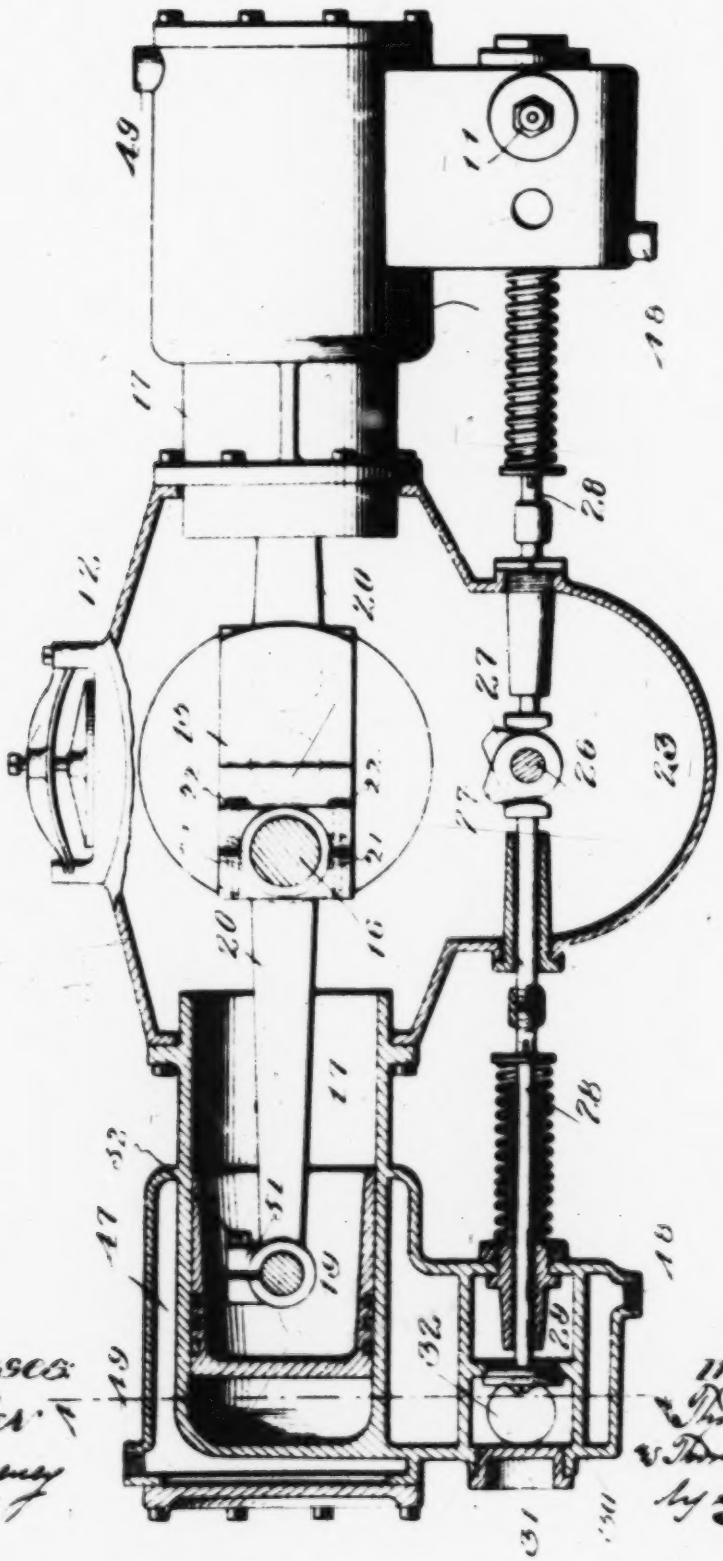

Witnesses:
Es. D. Kesler
C. M. Lindsey

Inventors:
Thomas L. Sturtevant
& Thomas J. Sturtevant
by Henry Calver
Atty

No. 740,781. PATENTED OCT. 6, 1903.

T. L. & T. J. STURTEVANT.

ELECTRICAL SPARKING IGNITER FOR GAS ENGINES.

APPLICATION FILED OCT. 9, 1901.

NO MODEL. 5 SHEETS—SHEET 4.

Fig. 4.

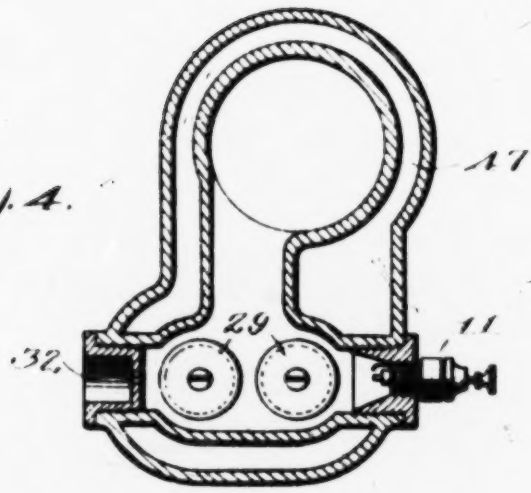

Fig. 5.

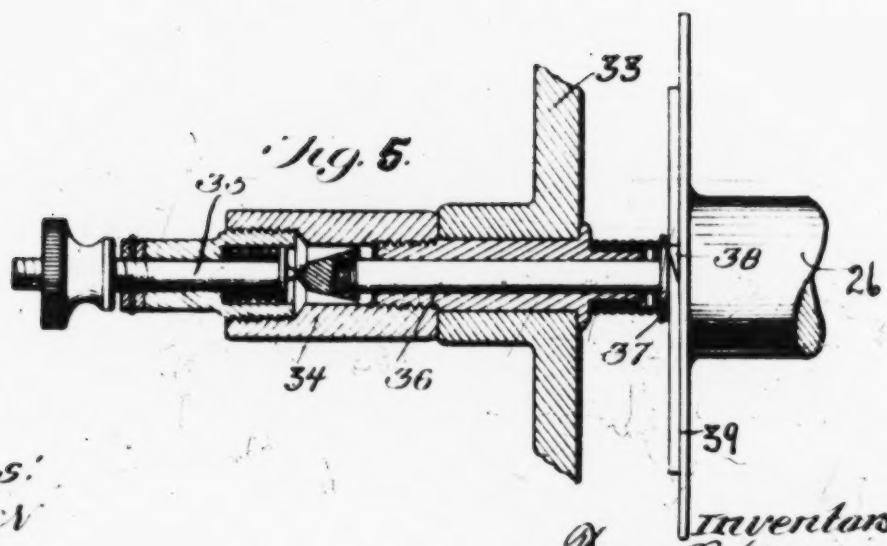

Witnesses:
C. D. Kesler
C. M. Sweeney

Inventors.
Thomas L. Sturtevant
& Thomas J. Sturtevant
by Henry Calvert
Atty.

No. 740,781. PATENTED OCT. 6, 1903.

T. L. & T. J. STURTEVANT.

ELECTRICAL SPARKING IGNITER FOR GAS ENGINES.

APPLICATION FILED OCT. 9 1901.

NO MODEL. 5 SHEETS—SHEET 5.

Fig. 6.

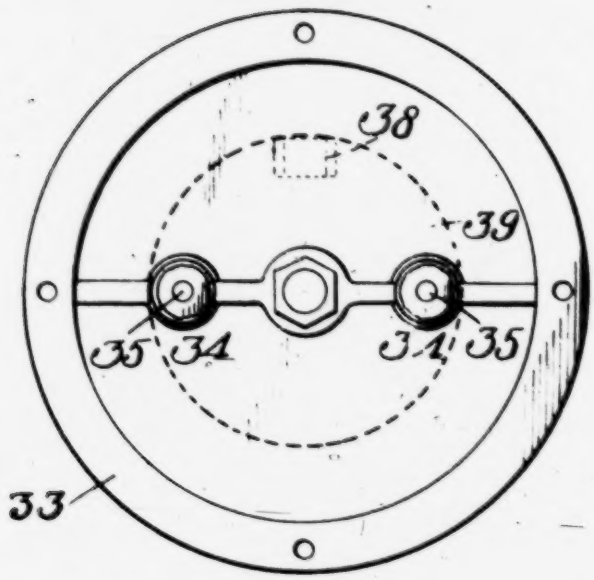

Fig. 7.

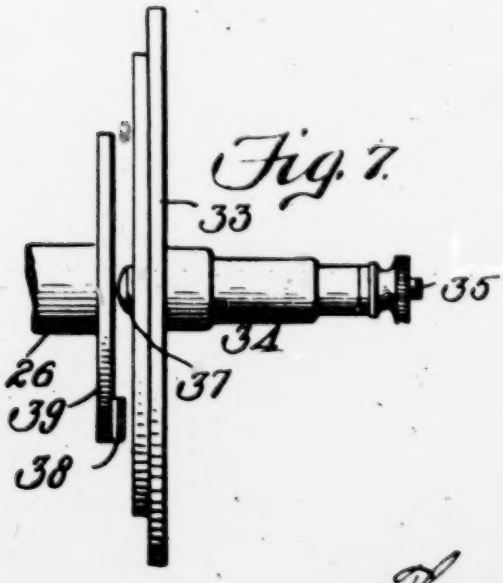

Witnesses:
C. D. Kesler.
C. M. Sweeney

Inventors
Thomas L. Sturtevant
Thomas J. Sturtevant,
by Henry Calver,
Attys

No. 740,781. Patented October 6, 1903.

UNITED STATES PATENT OFFICE.

THOMAS L. STURTEVANT, OF QUINCY, AND THOMAS J. STURTEVANT, OF NEWTON CENTER, MASSACHUSETTS.

ELECTRICAL SPARKING IGNITER FOR GAS-ENGINES.

SPECIFICATION forming part of Letters Patent No. 740,781, dated October 6, 1903.

Application filed October 9, 1901. Serial No. 78,083. (No model.)

To all whom it may concern:

Be it known that we, THOMAS L. STURTEVANT, residing at Quincy, in the county of Norfolk, and THOMAS J. STURTEVANT, residing at Newton Center, in the county of Middlesex, State of Massachusetts, citizens of the United States, have invented certain new and useful Improvements in Electrical Sparking Igniters for Gas-Engines, of which the following is a specification, reference being had therein to the accompanying drawings.

Our invention relates to that class of gas or explosion engines more particularly intended for use for driving motor-vehicles or boats, the object of our invention being to provide a balanced gas-engine of comparatively simple construction which will work smoothly or with as little vibration as possible and which is so constructed that the working parts most likely to require attention will be conveniently accessible for adjustment or repairs.

In the accompanying drawings, Figure 1 is a side view of our improved engine with the side covering-plate of the main casing removed to show the governor for the sparking devices. Fig. 2 is a plan view of the engine, partly in horizontal section. Fig. 3 is a side view of the same, partly in vertical section. Fig. 4 is a transverse sectional view on line 4 4, Fig. 3, through the cylinder and valve chamber. Fig. 5 is a detail view of a part of the sparking mechanism. Fig. 6 is a face view of the cover-plate with the make-and-break sparking plugs mounted thereon and with the cam-disk for operating the same shown behind in dotted lines, and Fig. 7 is a side view showing the same parts.

Referring to the drawings, 12 denotes the main casing of the engine, in which is mounted in suitable bearings the main crank-shaft, comprising the bearing or end portions 13, the outside disks 14, and the intermediate offset disk 15, the cranks 16 being connected to the said outside and intermediate disks. By forming the intermediate disk or web 15 with offset portions, as shown, we are enabled to bring the cylinders 17 more nearly opposite each other than would otherwise be possible and still permit the cranks to be sufficiently long as to afford adequate bearing-surfaces. In other words, the offset or intermediate disk or web 15 permits of the use of relatively long cranks in a comparatively compact space and enables the cylinders of the engine to be arranged nearly opposite each other. The cranks 16 are joined to the pistons 19 within the cylinders 17 by connecting-rods 20.

The main casing 12 is constructed at its lower part to form an oil-chamber 23, which will be supplied with oil, as denoted in dotted lines in Fig. 3. The main crank-shaft is provided with a gear-wheel 24, meshing with a larger gear-wheel 25 on a shaft 26 and which gear-wheel 25 is of proper size to dip into the oil in the oil-chamber 23. This gear-wheel 25 serves as a splasher for oiling the interiors of the cylinders and also for oiling the cranks and other running parts within the main casing, and it is so arranged as not to be directly opposite the chambers of either of the cylinders, so that it will not throw oil directly into the chambers of the cylinders; but by splashing it about generally in the chamber of the main casing the oil will naturally work its way into the parts to be lubricated, but without flooding the said parts with oil. We thus avoid an objection which sometimes arises from an excess of oil in the cylinders, in which case the oil works past the pistons into the combustion-chambers and by burning therein causes smoke and soot, which clogs up the parts and is thus seriously objectionable.

The shaft 26 is provided with cams 27 for operating the spring-pressed valve-rods 28, carrying the valves 29, controlling the openings to the sparking chambers 30, into which the sparking devices or plugs 11 extend. The chambers 30 are preferably provided with removable plugs 31, closing openings through which the valves may be removed, and also with plugs 32, through which when the said plugs 32 are removed the sparking can be observed.

The oil-chamber portion of the main casing is closed by the removable cover or plate 33, in which are mounted the make-and-break plugs 34, forming part of the sparking or igniting mechanism, and which plugs have suitable electrical connections with the sparking plugs 11, so that the electric circuits can be closed and opened at the proper times. These

make-and-break plugs each comprise a spring-pressed anvil rod or portion 35 and a spring-pressed hammer rod or portion 36. The hammer-rods 36 of the make-and-break plugs extend inward and are provided with small disks or caps 37, arranged in the path of movement of a cam 38, carried by a ring or disk 39, mounted on the shaft 26 and connected with the gear-wheel 25, so as to rotate therewith, excepting as its movements are controlled by a governing device to be described presently.

The cam 38 on the disk 39 is so arranged that when it strikes the caps 37 on the hammer-rods of the make-and-break plugs it will give slight turning movements to the said hammer-rods by reason of the side contact of the said cam with the said caps, so that the cam not only forces the hammer portions of said plugs inward into contact with the elastically-mounted anvil portions thereof, but owing to the slight rotary or twisting movements imparted to the hammer-rods both the hammer and anvil surfaces are kept clean by the rubbing contact incidental to the twisting movements imparted to the hammer-rods. This is important owing to the fact that the contact-surfaces by thus being kept clean will insure a proper sparking, while the elastically-mounted anvil-rods prevent any injurious contacts from resulting from the impacts of these make-and-break parts of the sparking devices.

The removable cover or plate 33 is central with the shaft 26, carrying the wheel 25, the valve-cams, and the sparking-governing devices, so that by removing said cover or plate easy access is afforded to these parts, which may be removed, if desired, through the opening closed by this cover or plate.

The governing device for the sparking mechanism comprises the levers 40, mounted on pivots 41 on the gear-wheel 25 and provided with weights 42. The outer ends of the levers 40 are drawn inward toward the center of the gear-wheel by springs 43, surrounding rods 44, jointed to the outer ends of the levers 40, said springs being partly housed in the cylinders 45, carried by the said gear-wheel. When the rotation of the gear-wheel is sufficiently rapid, so that the stress of the springs is overcome by the centrifugal action of the weighted levers, the cam-disk will be turned somewhat in the direction of the arrow, Fig. 1, through the links 46 connecting the levers 40 with the said disk, and when the speed of rotation of the said gear-wheel is lessened the said cam-disk will be moved in a reverse direction by the action of the said springs. Thus the cam 38 on the said cam-disk 39 will be moved forward or backward relative to the gear-wheel 25 for the purpose of varying the timing of the sparking in the combustion-chambers of the engine, as it is desirable in varying the speed of the engine, the time of sparking being earlier as the engine runs faster.

The cylinders of the engine are provided with double walls, forming between them spaces or chambers 47 for the circulation of water to cool the said cylinders, said chambers being provided with inlet-pipes 48 and outlet-pipes 49. A proper circulation of water through these chambers or water-jackets for the purpose of cooling the cylinders may be maintained by pumps in the usual manner.

From the foregoing it will be apparent that we provide a balanced gas-engine of compact arrangement so as to be well adapted for driving a motor-vehicle or boat with the least possible jar or vibration, and our engine is also constructed in such a manner that the cylinders and other interior parts will be well lubricated without being flooded with oil. Also the contact portions of the make-and-break plugs of the sparking device will be kept clean and bright by the slight rotary movements imparted to the hammer-rods thereof, and the parts of the engine to which frequent access may be desirable is provided for by the removable plugs 31 and 32 and the removable cover 33.

Having thus described our invention, we claim and desire to secure by Letters Patent—

1. In an explosion-engine, the combination with a sparking device in the combustion-chamber of the engine, of a make-and-break plug comprising a spring-pressed and endwise-movable anvil-rod and a spring-pressed and endwise-movable hammer-rod, and means for causing said rods to be forced into contact at suitable intervals.

2. In an explosion-engine, the combination with a sparking device in the combustion-chamber of the engine, of a make-and-break plug comprising an elastically-mounted anvil rod or portion and an elastically-mounted hammer rod or portion, and means for causing the said portions of the make-and-break plug to be forced into contact at suitable intervals, the said hammer-rod being provided with a cap or portion adapted to be engaged by said means in such a manner as to impart partial rotary movements to said hammer-rod at each contact of the said cam with the said cap.

3. In an explosion-engine, the combination with a sparking device located in the combustion-chamber of the engine, of a make-and-break device comprising two endwise-separable parts, means for forcing said separable parts into contact with each other at intervals, and means for imparting partial rotary movements, constantly in the same direction, to one of said separable parts as they are forced into endwise contact with each other.

4. In an explosion-engine, the combination with a sparking device located in the combustion-chamber of the engine, of a make-and-break plug comprising an elastically-mounted and endwise-movable anvil-rod and an elastically-mounted and endwise-movable hammer-rod, a cam for forcing one of said rods into contact with the other, at intervals, and

an automatic governor for regulating the timing position of said cam as the engine runs faster or slower.

5. In an explosion-engine, the combination with the main casing thereof provided with an opening, of an actuating-cam for the sparking device and an automatic regulator for the said cam both arranged opposite said opening and removable therethrough when the opening is not closed, a removable plate or cover closing the said opening and on which removable plate or cover the make-and-break plugs are mounted.

In testimony whereof we affix our signatures in presence of two witnesses.

THOMAS L. STURTEVANT.
THOMAS J. STURTEVANT.

Witnesses:
L. H. STURTEVANT,
W. H. ELLIS.

No. 780,221 PATENTED JAN. 17, 1905.

J. W. PACKARD.

ELECTRIC IGNITER.

APPLICATION FILED JAN. 10, 1903

2 SHEETS SHEET 1.

Fig. 2.

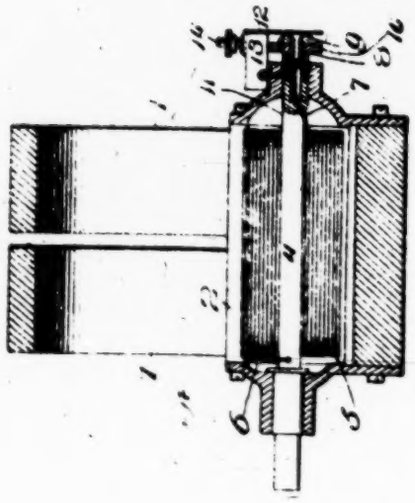

Fig. 3.

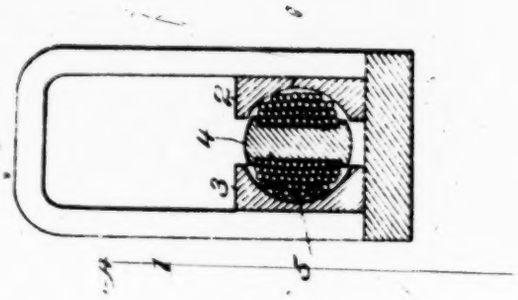

Fig. 1.

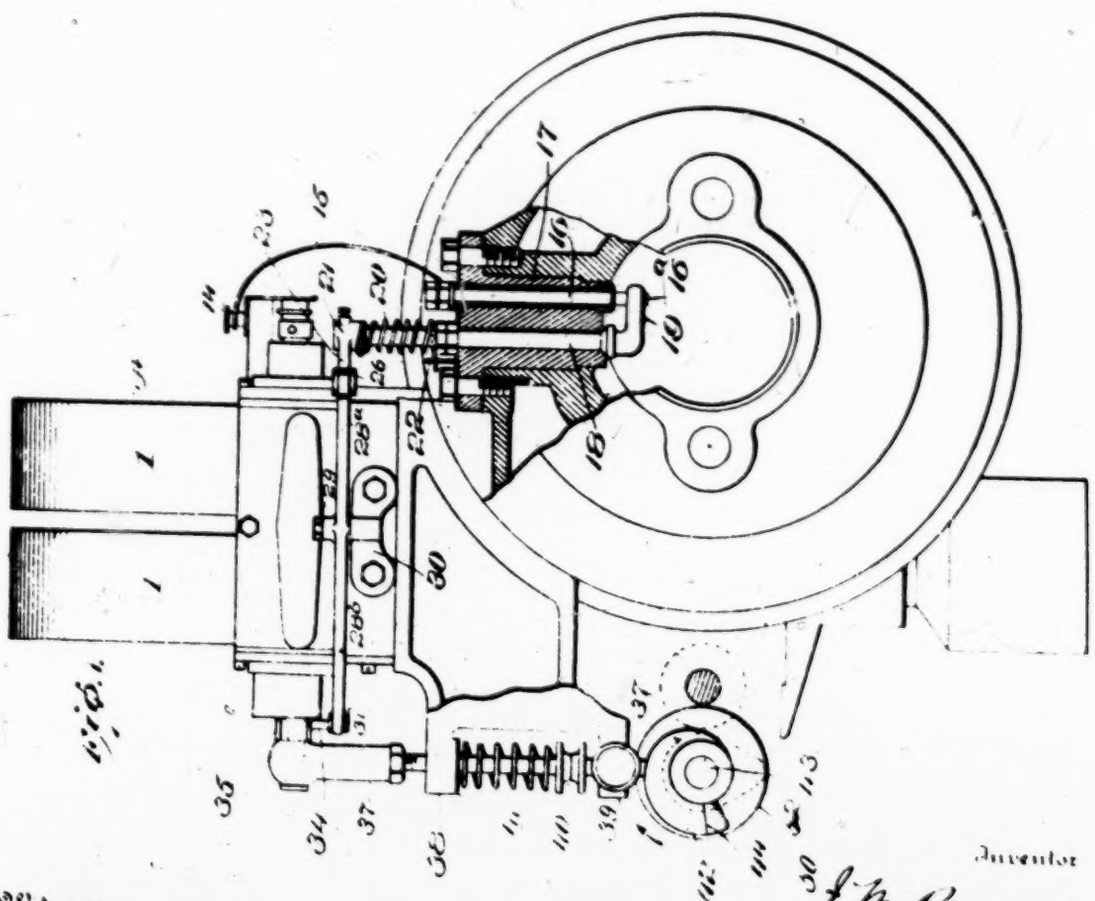

Witnesses
J. M. Fowler Jr.
C. W. Clement

Inventor
J. W. Packard
By Watson & Coatsworth
Attorneys

No. 780,221. PATENTED JAN. 17, 190[illegible]

J. W. PACKARD.

ELECTRIC IGNITER.

APPLICATION FILED JAN. 10, 190[illegible]

2 SHEETS SHEET [illegible]

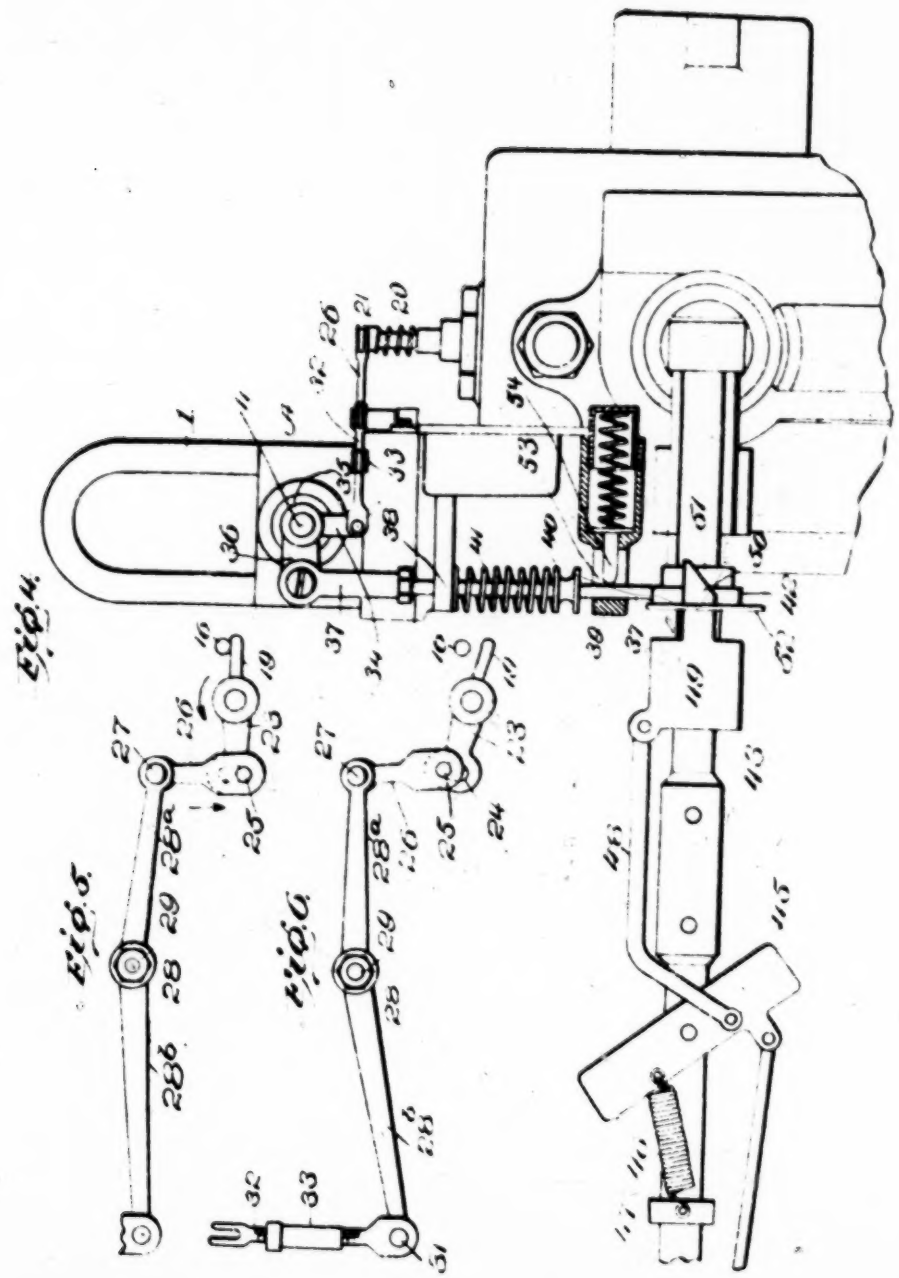

Witnesses

J. M. Foulds Jr.

C. W. Clement

Inventor

J. W. Packard

by Watson & Watson

Attorneys

No. 780,221. Patented January 17, 1905.

UNITED STATES PATENT OFFICE.

JAMES W. PACKARD, OF WARREN, OHIO, ASSIGNOR TO THE PACKARD MOTOR CAR COMPANY, OF DETROIT, MICHIGAN, A CORPORATION OF WEST VIRGINIA.

ELECTRIC IGNITER.

SPECIFICATION forming part of Letters Patent No. 780,221, dated January 17, 1905.

Application filed January 10, 1903. Serial No. 138,501.

To all whom it may concern:

Be it known that I, JAMES W. PACKARD, a citizen of the United States, residing at Warren, in the county of Trumbull, State of Ohio, have invented certain new and useful Improvements in Electric Igniters, of which the following is a specification.

This invention comprises improvements in electric igniters for explosive-engines; and it includes an electric generator, means for intermittently operating said generator, means for separating the electrodes of the sparking device while the generator is in operation, and means for automatically varying the time of operation, and consequently of ignition, relative to the engine-stroke according to the speed of the engine.

In the accompanying drawings, Figure 1 is a rear end view of a gas-engine cylinder, partly in section, with the igniting apparatus applied thereto. Fig. 2 is a vertical longitudinal section through the center of the generator. Fig. 3 is a central transverse section through the same. Fig. 4 is a side view of the rear end of the cylinder with the igniting apparatus applied thereto and showing also the governor for controlling the time of ignition. Fig. 5 is a plan view of the levers for operating the movable electrode, said levers being shown in their normal position; and Fig. 6 is a similar view illustrating the manner in which the electrodes are separated when the current is being generated.

Referring to the drawings, A indicates an electric generator, preferably a magneto-generator, consisting of one or more permanent horseshoe-magnets 1, having internal pole-pieces 2 and 3, between which is arranged an H-armature 4, having insulated copper wire 5 coiled thereon. One end, 6, of the coil of wire is grounded upon the shaft, as shown in Fig. 2, and the opposite end, 7, is connected to a shank 8 upon a metal contact-disk 9. This shank extends into a tubular insulating-bushing 10, which fits into a socket in the end of the armature-shaft 11. A spring contact-arm or brush 12, secured upon an insulating-block 13, bears upon the contact-disk 9 and conducts the current to a binding-post 14 upon said block. A wire 15 connects the binding-post 14 with a stationary electrode 16, secured within and insulated from an igniter-plug 17. The conducting-wire 15 is the only necessary wire external to the generator. The end 6 of the generating-coil is electrically connected, through the generator and engine-frames and the various metal parts of the apparatus, with a movable electrode 18, which is capable of oscillation about its vertical axis and is provided at its lower end with the contact-arm 19, which latter is normally held against the lower end 16ª of the stationary electrode by a spiral spring 20, which is coiled about the upper end of the movable electrode. The upper end of this spring is connected to a collar 21, which is secured upon the movable electrode, and the lower end of the spring is connected to a fixed pin 22, which is secured to the igniter-plug. The spring tends to turn the movable electrode in the direction indicated by the arrow, Fig. 5, and normally presses the contact-arm 19 of said electrode against the stationary electrode, as shown in said figure and also in Fig. 1. Connected with the collar or hub 21 is a short lever-arm 23, having a slot 24 at its outer end, into which extends a pin 25 upon a link 26, which link is connected by a pivot-pin to one arm, 28ª, of a lever 28. This lever is mounted upon a pivot-pin 29, which is supported by a bracket 30 at the rear of the generator, and the longer arm, 28ᵇ, of the lever is connected by a pivot-pin 31 to a link 32, which is adjustable in length by means of a turnbuckle 33. The link 32 is connected to one arm, 34, of a bell-crank lever 35, which latter is secured upon the armature-shaft 11. The other arm, 36, of said bell-crank lever is pivotally connected to a rod 37, which is movable vertically in bearings 38 and 39. Between said bearings is arranged a collar 40, and between said collar and the bearing 38 is a compression-spring 41, which normally tends to force the rod 37 downwardly against a cam 42, which is secured upon a horizontal shaft 43. As shown in Fig. 1, the radius of the cam, starting near the shaft, gradually increases and the cam terminates abruptly at its highest point 44. Arranged upon the shaft 43 is a governor 45

consisting of a block or bar of metal pivoted centrally to the shaft. The centrifugal force when the shaft is in motion tends to throw the metal block or bar at right angles to the shaft against the tension of a spring 46, which is connected to the bar 45 at one side of its pivot-point and to a collar 47. A link 48 is connected to the bar 45 at the opposite side of its pivotal point, and this link is pivotally connected with a collar 49, movable longitudinally of the shaft and having a part 50, which projects longitudinally of the shaft in front of the abruptly-terminating end of the cam. The outer surface of the part 50, as shown in Fig. 1, is flush with the periphery of the cam, and said part forms a continuation of the cam. The rear face 51 of the projection 50 is beveled, as shown in Fig. 4, and it will be apparent that as the part 50 forms a continuation of the cam the position of said part will determine the time in the revolution of the shaft 43 when the rod 37 will drop from the higher onto the lower part of the cam. The projection 50 extends through a suitable guide-opening in a flange 52 at the side of the cam.

The shaft 43 is suitably geared to the engine and makes one revolution during each cycle of operations. The rotation of the cam raises the rod 37 slowly, and this rod in turn rocks the bell-crank lever 35, thereby moving the armature at a comparatively slow speed in one direction. At the same time the link 32 is drawn to the left in Fig. 4, thereby moving the lever 28 and forcing the link 26 in the direction indicated by the arrow, Fig. 5. This movement of the link 26 is not accompanied by a movement of the lever-arm 23 on account of the slot 24 in the link, which allows relative movement between said parts. The electrodes therefore are held in contact by the spring 20 during this movement of the parts. At the proper moment for the ignition of the charge in the engine-cylinder the rod 31 passes off of the elevated portion of the cam and is quickly depressed by the spring 41. The armature is thereby given a quick oscillation and an electric current is generated in its coils, the circuit being at the same time closed through the electrodes. While this current is being generated the electrodes are separated by the reverse movements of the link 32, lever 28, link 26, and lever 23. The movement of the lever 23 and the electrode does not take place until after the armature is in motion, so that a current of full intensity is generated before the electrodes are separated. The lost motion between the link 26 and lever 23, it will be seen, delays the separation of the electrodes, as the lever 23 will not be moved by the link until the pin 25 travels from one end of the slot to the other. Fig. 6 shows the relative positions of the parts at the time when the electrodes are separated to cause a spark.

The time of ignition is regulated according to the speed of the engine by the adjustable portion 50 of the cam, the position of which is controlled by the centrifugal governor. When the engine is operating slowly, the entire width of the part 50 will pass under the rod 37, and as this movable part of the cam is drawn to the left in Fig. 4 with an increase in speed it will be seen that the cam-surface will be shortened, thus permitting the rod 37 to drop at an earlier point in the revolution of the engine. The time of ignition is thus automatically controlled. I do not wish to confine myself to any particular form of generator or to any particular arrangement of levers and parts for operating the generator and separating the electrodes, as it will be evident that the parts may be variously constructed and arranged to accomplish the desired ends.

It will be evident that if it is desired to employ a jump-spark instead of a spark caused by separating the electrodes, the generator may be used to operate an induction-coil having its secondary winding connected to two separate electrodes in the combustion-chamber in the usual manner. Instead of operating the rod, which is tripped by the cam, with a spring, the said rod or member may be operated by a weight, which for all practical purposes is the equivalent of a spring.

The bearing 39 has a slot 53, through which the tripping-rod 37 extends, and the rod is normally held in position upon the cam-surface by a spring-pressed pin 54. In case of the reversal of the engine at any time the tripping-rod instead of being caught and bent or broken by the cam extension 50 will be moved laterally against the pressure of the pin 54 by the inclined face 51 of the cam extension.

Having thus described my invention, what I claim as new, and desire to secure by Letters Patent, is

1. In an electric igniter for explosive-engines, a generator, a spiral cam having a transversely-adjustable extension at its rear end, said extension having one end inclined to the axis of the cam, and a spring-pressed member bearing upon said cam and operatively connected to the movable member of the generator.

2. In an electric igniter for explosive-engines, a generator, a spiral cam having a transversely-adjustable extension at its rear end, said extension having one end inclined to the axis of the cam, and a governor arranged to vary the position of said cam extension according to the speed of the engine.

3. In an electric igniter for explosive-engines, a generator, a cam-shaft, a spiral cam upon said shaft, a collar movable longitudinally upon the shaft and having a part projecting longitudinally of the shaft and forming an extension of the cam-surface, the end

of said part being inclined to the axis of the shaft, a centrifugal governor connected to said collar, and a spring-pressed member connected to the movable member of the generator and bearing upon said cam.

4. In an electric igniter for explosive-engines, a fixed electrode, an electrode movable about its axis and having an arm arranged to bear against the fixed electrode, a spring normally holding said electrodes in contact with one another, a generator having coils connected to said electrodes, a cam, a spring-pressed member arranged to be tripped periodically by said cam, a bell-crank lever connected with the movable element of the generator and having one arm connected to said member, a centrally-pivoted lever connected to the other arm of said bell-crank lever, a link pivoted to said arm, said link having a pin at its outer end, and a lever-arm connected with the movable electrode and having a slot engaged by said pin.

In testimony whereof I affix my signature in presence of two witnesses.

JAMES W. PACKARD.

Witnesses:

EDITH GORTON,

G. B. PORT.

No. 798,992. PATENTED SEPT. 5, 1905.

W. J. COCHRAN.

CONTACT BREAKER FOR SPARKERS.

APPLICATION FILED MAR. 1, 1905.

Fig. 1.

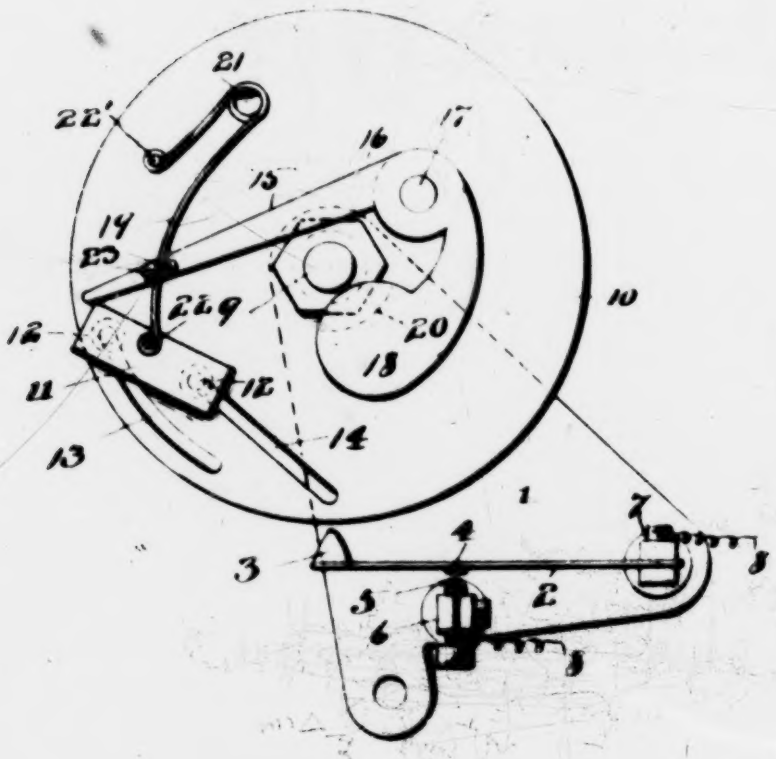

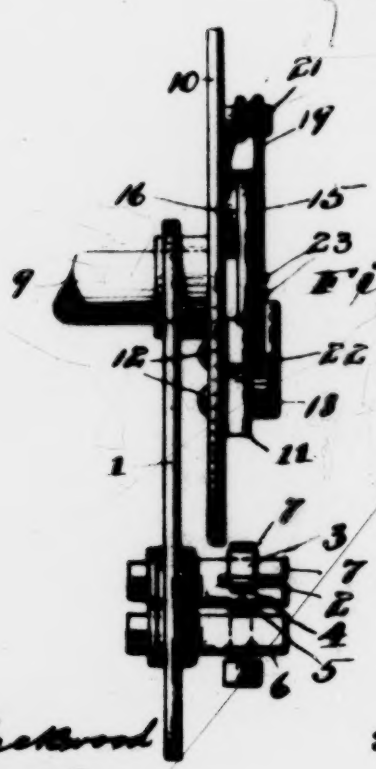

Fig. 2.

Witnesses:
Jas. H. Blackwood
Warren S. Ogden

Inventor
Walter J. Cochran
By
Attorneys

UNITED STATES PATENT OFFICE.

WALTER J. COCHRAN, OF CLEVELAND, OHIO, ASSIGNOR OF ONE-HALF TO HERBERT C. HEARNE, OF CLEVELAND, OHIO.

CONTACT-BREAKER FOR SPARKERS.

No. 798,992. Specification of Letters Patent. Patented Sept. 5, 1905.

Application filed March 1, 1904. Serial No. 196,042.

To all whom it may concern:

Be it known that I, WALTER J. COCHRAN, a citizen of the United States of America, residing at Cleveland, in the county of Cuyahoga and State of Ohio, have invented certain new and useful Improvements in Contact-Breakers for Sparkers; and I hereby declare the following to be a full, clear, and exact description of the invention, such as will enable others skilled in the art to which it pertains to make and use the same.

My invention relates to contact-breakers for explosive-engine sparkers; and its object is to provide means of a simple and effective character for automatically advancing or retarding the time of ignition of the explosive charge in accordance with and automatically governed by changes in the speed of the engine.

To this end my invention is embodied in its preferable form in the device hereinafter described, and illustrated in the drawings herewith.

In the accompanying drawings, Figure 1 is a front view in elevation of the device embodying my invention, and Fig. 2 is a side or edge view in elevation.

Referring to the drawings, 1 is a plate or bracket which may be secured to the frame of the motor or of the vehicle if the engine is applied to the latter. On this plate is mounted a spring contact-finger 2, carrying at its free end a toe-piece 3. A contact-piece 4 is carried by the finger between its ends and is adapted to make electrical contact with a pin or other contact member 5, carried by a binding-stud 6, which is mounted on the plate 1. The stud 6 and another binding stud or screw 7, the latter being adapted to receive the end of the spring contact member 2, are adapted to be connected by wires 8 to a suitable jump-spark device (not shown) in the engine-cylinder.

Fixed on a shaft 9, which may be the main shaft or another shaft connected thereto in the proper ratio of revolution according to the number of cycles of the engine, is a rotatable contact-maker carrier consisting, preferably, of a disk 10. On this disk is mounted a contact-maker consisting of a wiper-block 11, having a portion extending outside the periphery of the disk and adapted to wipe against the toe 3 of the spring contact-piece 2, which toe-piece is located in the line of travel of the projecting part of the block. The block is slidably mounted, by means of screw-bolts 12, in guide-slots 13 14 in the disk. The slot 13 is a circumferential slot, and slot 14 extends on a secant to the circle of the disk, whereby as the block moves back and forth on the disk it will maintain the same extent of projection beyond the edge of the disk. Adapted to bear against the rear end of the block is a lever 15 of a centrifugal governor 16, pivoted on the disk at 17 and carrying a weight 18. The weight may be cut away or offset at 20 to pass over the nut on the end of the shaft 9. A coiled and bent spring 19 is connected at one end to the wiper-block 11, being twisted around a pin 22 on the block, and is coiled around a stud 21 and at the other end connected to a pin 22′ on the disk. This spring serves to pull the block to the rear end of the slots 13 14 and to hold it normally retracted at the rear ends of such slots. Guide-pins 23 are mounted on the lever 15 on each side of the spring 19.

The operation of the device is as follows: Should the speed of the engine be increased, the speed of rotation of the shaft 9 will be correspondingly increased, and if the speed is sufficiently great the governor-weight 18 will be thrown outward away from the center of the disk, causing the governor to turn on its pivot, and in consequence of this movement the lever 15 will press the wiper-block 11 forward in its guide-slots in the direction of movement of the disk and move the block around on the disk, and thereby advance the time of contact and the time of ignition. The wiper-block in its travel will wipe against the projecting toe-piece 3 of the spring-contact 2 and press the contact-piece against the pin contact member 5, thereby establishing a circuit and exciting the sparker in the engine-cylinder. When the speed decreases, the governor will move inward and the block will be drawn back by the spring 19. When the block is advanced owing to the pivoting of the governor, it will yield somewhat when it strikes the toe-piece of the contact member and the block will drag slightly. Hence a proportionately longer period of contact will be obtained when the engine is running at higher speeds, thereby further insuring the certainty of the ignition. The diameter of the circle the contact-maker travels in being so great in proportion to the size of the contact-maker, the life of the batteries is lengthened over

that under the operation of the ordinary sparker.

The number of contact-makers corresponds to the number of cylinders employed.

It is clear that changes may be made in the details of the device without departing from the principle of my invention.

Having thus described my invention, what I claim is

1. A contact make and break device for engine-sparkers having circuit-closing contact-pieces, a rotatable carrier, a wiper-block mounted on said carrier and projecting into the line of one of said contacts, means to permit said wiper-block to slide circumferentially on the carrier and a centrifugal governor and a spring on said carrier for controlling the sliding of the block, substantially as described.

2. A make and break device for engine-sparkers having circuit-closing contact-pieces, in combination with a rotatable disk driven from the engine, a contact-maker consisting of a wiper-block carried by said disk, one of said contact-pieces projecting into the line of travel of said block and meeting the same at an angle, and means to permit said block to slide on said disk, substantially as described.

In testimony whereof I sign the foregoing specification, in the presence of two witnesses, this 26th day of February, 1904, at Cleveland, Ohio.

WALTER J. COCHRAN.

Witnesses:
HENRY I. EMERSON,
WALLACE I. KNIGHT.

No. 810,963. PATENTED JAN. 30, 1906

H. N. MOTSINGER.

ELECTRIC IGNITER.

APPLICATION FILED MAY 31, 1904.

2 SHEETS—SHEET 1.

Fig. 2.

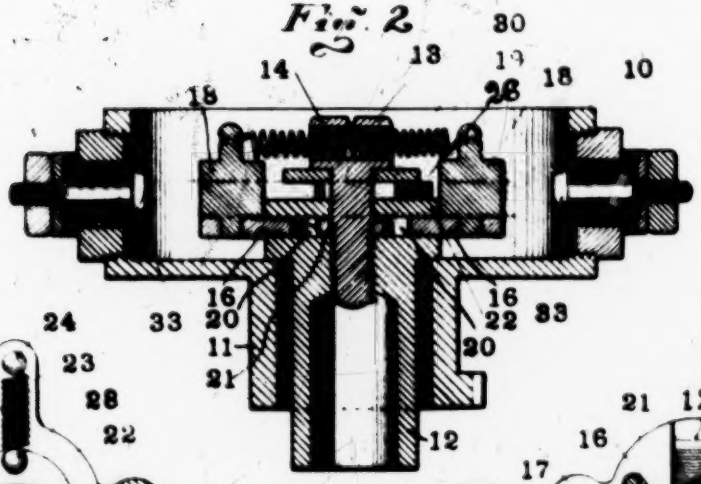

Fig. 3.

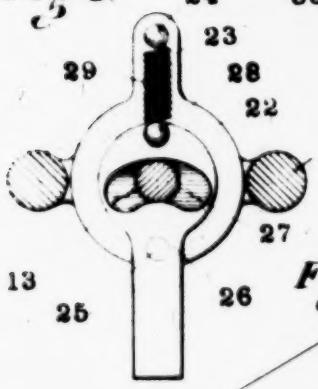

Fig. 4.

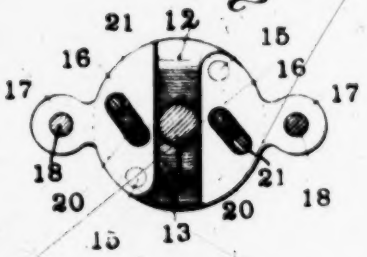

Fig. 1.

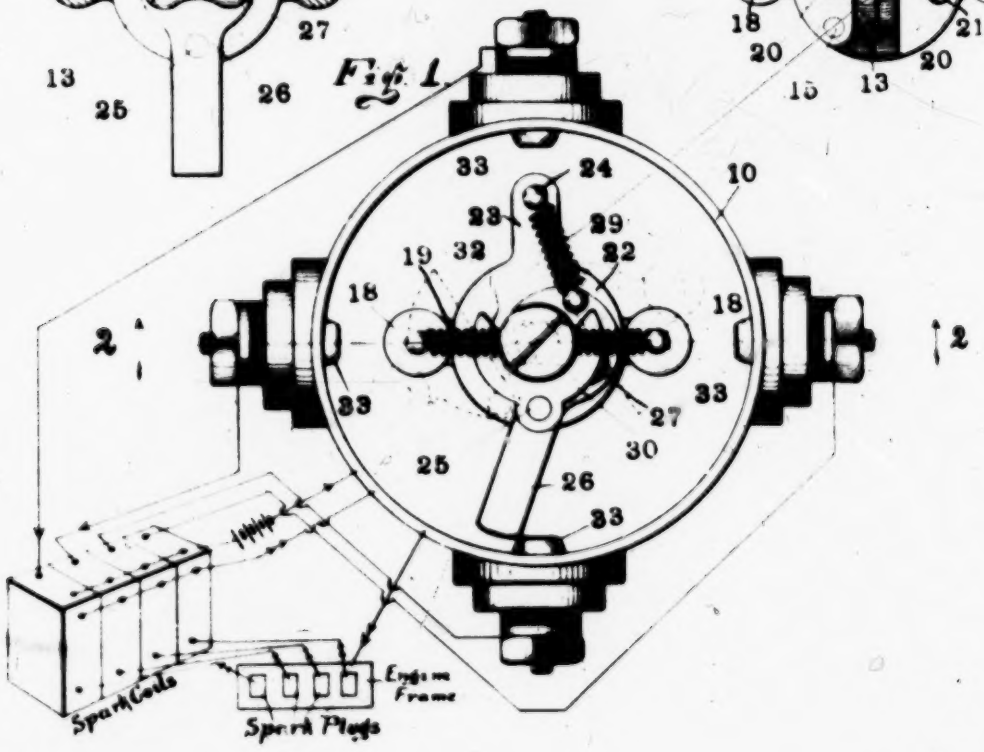

Witnesses
Adelaide Kearns
J. A. Walsh.

Inventor
Homer N. Motsinger.
By
Bradford & Hood
Attorneys

No. 810,963. PATENTED JAN. 30, 1906

H. N. MOTSINGER.

ELECTRIC IGNITER.

APPLICATION FILED MAY 31, 1904.

2 SHEETS SHEET 2

Fig. 6.

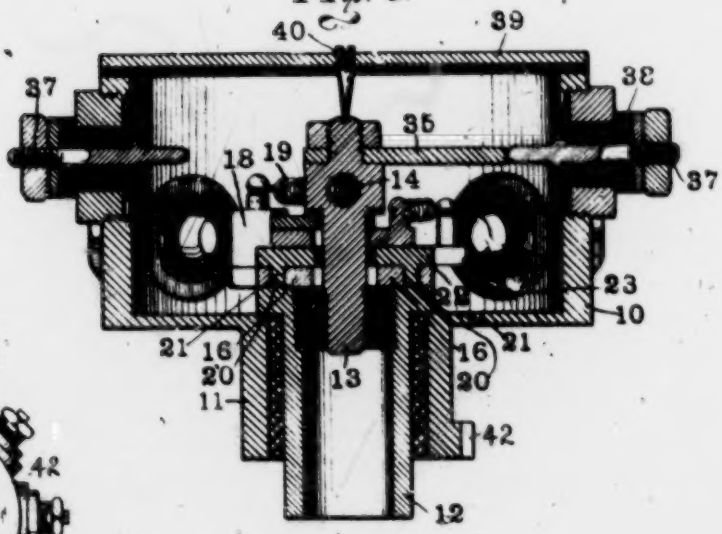

Fig. 7.

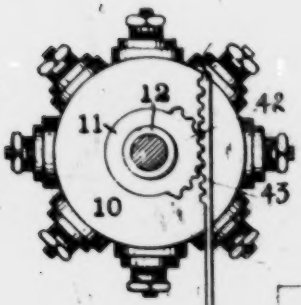

Fig. 5.

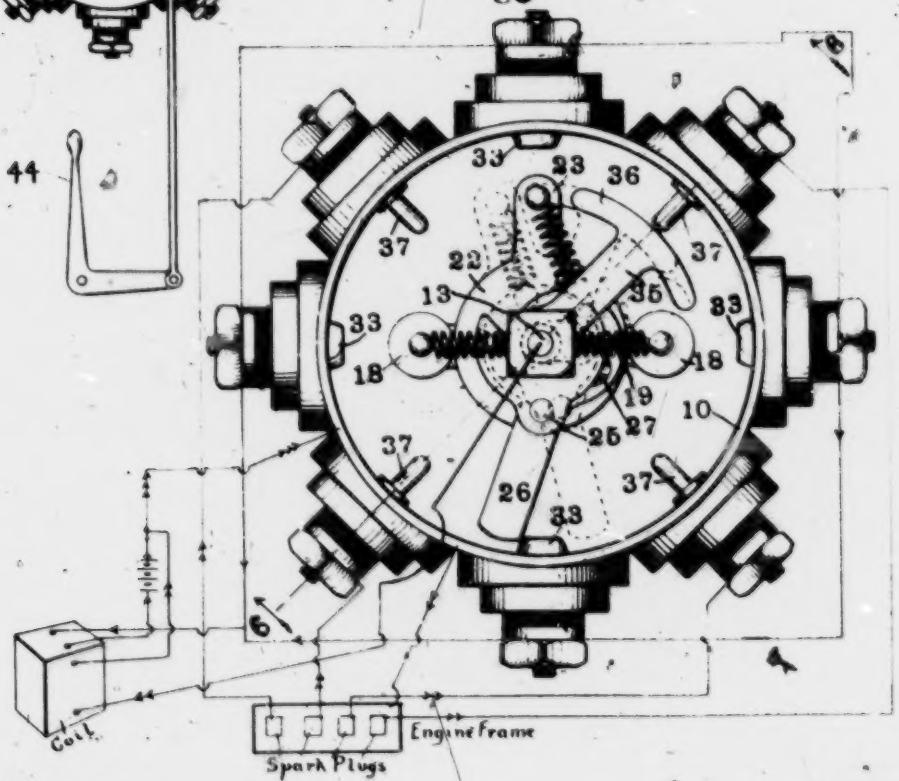

Witnesses
Adelaide Keane.
J. A. Walsh.

Inventor
Homer N. Motsinger.

By
Bradford Hood
Attorneys

UNITED STATES PATENT OFFICE.

HOMER N. MOTSINGER, OF PENDLETON, INDIANA, ASSIGNOR TO MOTSINGER DEVICE MANUFACTURING COMPANY, OF PENDLETON, INDIANA, A CORPORATION OF INDIANA.

ELECTRIC IGNITER.

No. 810,963. Specification of Letters Patent. Patented Jan. 30, 1906.

Application filed May 31, 1904. Serial No. 210,485.

To all whom it may concern:

Be it known that I, HOMER N. MOTSINGER, a citizen of the United States, residing at Pendleton, in the county of Madison and State of Indiana, have invented certain new and useful Improvements in Electric Igniters, of which the following is a specification.

The object of my invention is to produce a device for automatically controlling the terminals in an igniting system for gas-engines and to provide means by which the time of action may be externally and manually retarded or advanced without disturbing the adjustment of the governor.

The accompanying drawings illustrate my invention.

Figure 1 is a plan of a mechanism embodying my invention, together with a diagram of the wiring; Fig. 2, a section on line 2 2 of Fig. 1; Fig. 3, a section of Fig. 2 immediately beneath the plate 30; Fig. 4, a section of Fig. 2 immediately above arm 16; Fig. 5, a plan of a modified form for use in connection with a single-induction spark-coil for multiple cylinders, together with a diagram of the wiring; Fig. 6, a section on line 6 6 of Fig. 5, and Fig. 7 an under plan showing a means for manually advancing or retarding the time of terminal action.

In the drawings, 10 indicates a suitable inclosing casing having a central bearing 11 within which is journaled a short shaft-section 12, to which a driving-shaft may be attached. Secured to the inner end of shaft 12 is a pin 13, having a head provided with a transverse opening 14. The head of shaft 12 is slightly enlarged, as clearly shown in Fig. 2, and this head carries a pair of pins 15 15, which lie parallel with the axis of the shaft-section and are diametrically opposed. Pivoted upon each pin 15 is a governor-arm 16, each of which is provided with an extension 17, to which is attached a small governor-weight 18. A spring 19 extends through the transverse opening 14 and has its ends attached to governor-weights. Each governor-arm is provided with a slanting slot 20, adapted to receive a pin 21, projecting downward from the under face of a plate 22, sleeved upon the pin 13. Plate 22 is provided at one side with an extended arm 23, from which arises a pin 24. Opposite arm 23 the upper side of plate 22 is provided with a pin 25, upon which is pivoted a contact-arm 26, said contact-arm being provided with an arc-shaped slot 27, through which the pin 13 passes freely. Contact-arm 26 is provided with a pin 28, which lies adjacent pin 24 of plate 22, and these two pins are connected by a spring 29, which tends normally to hold the outer end of contact-arm 26 radially extended from the center of pin 13. Arranged above the contact-arm 26 is a plate 30, provided with an opening adapted to receive pin 25, said plate being provided with a perforation through which the pin 13 passes and having a portion cut away, as at 32, to permit freedom of movement of pin 28 about pin 25 as an axis. Projecting into the path of movement of the end of contact-arm 26 are contact-points 33, as many as may be desired, said contact-points being insulated from the contact-arm 26 in any desired manner. In the drawings these points 33 are shown as carried by insulating-plugs inserted in the main casing 10.

Where a single induction-coil is to be used with a multicylinder-engine, I use the construction shown in Figs. 5 and 6. The construction already described is the same, except that the pin 13 is insulated from the shaft 12, as is clearly shown in Fig. 6, and the following parts are added: A terminal arm 35 is secured to the upper end of pin 13 and is projected radially toward the wall of casing 10 and provided at its outer end with an extended arc-shaped portion 36, which covers, say, ten or fifteen degrees. This extension 36 is adapted to communicate the high-tension current successively to a series of terminals 37, which are carried by insulated supports 38, mounted in the wall of the casing, as clearly shown in Figs. 5 and 6. In either form the casing 10 will be provided with a suitable cover, the cover 39 of the second form (that shown in Figs. 5 and 6) being provided with a central pin 40, adapted to contact with the head of pin 13. Pin 40 should be insulated from the casing in the modification shown in Fig. 6.

Thus far the means for advancing or retarding the spark is entirely automatic; but

there are times when it is advisable that the operator be able to manually advance or retard the spark without, however, affecting the adjustment or operation of the automatic means, and for this purpose I provide suitable means for rotating the casing upon shaft 12. In the drawings I have shown a means in which the casing 10 is provided with a segmental gear 42, engaged by a rack-bar 43, (see Fig. 7,) connected by any suitable connections to an operating-lever or other operating means 44, the arrangement being such that by shifting the rack-bar 43 the casing 10 may itself be angularly shifted through a desired angle about the axis of rotation of the shaft 12.

In operation, referring especially to Figs. 1 and 2, suppose each of the terminals 33 to be connected with one primary terminal of one spark-coil, while shaft 12 (casing 10) is connected to the other side of the sparking-circuit in the usual manner, as indicated in Fig. 1. When shaft 12 is rotated, arm 26 will be brought successively into contact with the terminals 33, and because of the length of said arm the arm will be held at its outer end by each terminal, while the pivot 25 thereof will continue in regular motion. As a consequence the arm 26 is swung upon the pivot 25, as shown in Fig. 1, while the end thereof is held in contact with the terminal 33. When pin 25 has been carried around a sufficient distance, however, the terminal 33 no longer forms an obstruction to the arm 26, and the spring 29 thereupon operates to bring the arm 26 quickly away from the terminal. As the speed of shaft 12 increases the governor members 16 swing upon their pivots 15 and through the inclined slots 20 act upon the pins 21 of plate 22, and this causes the plate 22, together with the arm 26, carried thereby, to swing around pin 13 as an axis in the direction of rotation of shaft 12, thus advancing the time of contact of arm 26 with the terminal 33. In the construction shown in Figs. 5 and 6 the arm 26 is placed in the primary circuit, while the arm 35 36 is in the secondary circuit, the arrangement being such that the portion 36 comes in close proximity to one of the terminals 37 at the same time that arm 26 contacts with one of the terminals 33, the portion 36 of the arm 35 being made of the lengths shown in order to allow for the required amount of advancing or retracting of the arm 26 with relation to the shaft 12.

With the construction described and any given position of the governor members the spark will take place at a given point in the stroke of each piston. If the operator, however, desires a different time of spark at the same speed, he has merely to shift the rack-bar 42, and thus advance or retract the casing 10, whereupon the desired result is obtained.

I claim as my invention—

1. In an electric igniter, the combination of, a casing carrying one or more terminals projecting beyond the path of movement of a contact-arm, a shaft journaled in said casing, a plate rotatably mounted on the shaft, the said contact-arm pivoted upon said plate eccentrically with relation to the shaft and extending substantially radially to coöperate with the casing-terminals, yielding means for holding said arm in normal position, speed-controlled means carried by said shaft, and connections between said speed-controlled means and said plate whereby the plate will be angularly shifted by movement of the speed-controlled means.

2. In an electric igniter, the combination of, a pair of members one rotatable with relation to the other, a pair of contact-terminals one carried by each of said members and one of said terminals being pivoted eccentrically to the axis of rotation and extending substantially radially, and the other of said terminals projecting into the path of movement of the radially-projecting terminal between its end and its pivotal point, and means for yieldingly holding said pivoted terminal in normal position with relation to its carrier.

3. In an electric igniter, the combination of, a casing carrying one or more terminals, a shaft journaled therein, a normally radially extending contact-arm pivotally mounted upon said shaft eccentrically thereto and adapted to coöperate with the casing-terminals, and means for yieldingly holding said contact-arm in normal position.

4. In an electric igniter, the combination of, a casing carrying one or more terminals, a shaft journaled in said casing, a plate rotatably mounted on the shaft, a contact-arm pivoted upon said plate eccentrically with relation to the shaft and extending substantially radially to engage the terminal, yielding means for holding said arm in normal position, speed-controlled means carried by the shaft, connections between said speed-controlled means and said plate whereby the plate will be angularly shifted by movement of the speed-controlled means, and means for shifting the casing angularly upon the shaft.

5. In an electric igniter, the combination of, a pair of members one rotatable with relation to the other and the said other normally fixed, a pair of contact-terminals one carried by each of said members and one of said terminals being pivoted eccentrically with relation to the axis of rotation and projecting substantially radially, and the other extended into the path of movement of the pivoted member between its end and its pivotal point, means for yieldingly holding said pivoted terminals in normal position with relation to its carrier, and means for angularly adjusting the normally fixed member with relation to the rotating member.

6. In an electric igniter, the combination of, a pair of members one rotatable with relation to the other, a pair of contact-terminals one carried by each of said members and one of said terminals being pivoted eccentrically with relation to the axis of rotation, and extending substantially radially, and the other extended into the path of movement of the pivoted member between its end and its pivotal point, means for yieldingly holding said pivoted terminal in normal position with relation to its carrier, and speed-controlled means operated by the rotatable member for shifting one of the contact-terminals angularly.

7. In an electric igniter, the combination of, a pair of members one rotatable with relation to the other and the other normally fixed, a pair of contact-terminals one carried by each of said members and one of said terminals being pivoted eccentrically with relation to the axis of rotation and extending substantially radially, and the other extended into the path of movement of the pivoted member between its end and its pivotal point, means for yieldingly holding said pivoted terminal in normal position with relation to its carrier, speed-controlled means operated by the rotatable member for angularly shifting the terminal carried by said rotatable member, and means for angularly adjusting the normally fixed member and its terminal.

8. In an electric igniter, the combination of, a casing carrying one or more terminals, a shaft journaled therein, a plate rotatably mounted on the shaft, a substantially radial contact-arm pivoted upon said plate eccentrically with relation to the shaft and radially extending therefrom, yielding means for holding said arm in normal position and capable of permitting movement of the arm in either direction, and a pair of governor-arms eccentrically pivoted upon the shaft and each having an inclined slot engaging a portion of said plate whereby said governor members will operate to shift the plate angularly upon the shaft.

9. In an electric igniter, the combination of, a pair of members one rotatable with relation to the other, a pair of contact-terminals one carried by each of said members and one of said terminals being pivoted eccentrically with relation to the axis of rotation and extending substantially radially, and the other of said members projected into the path of movement of the pivoted member between its end and its pivotal point, means for yieldingly holding said pivoted terminal in normal position with relation to its carrier, and a second pair of contact-terminals carried by each of said members, said second pair being insulated from the first pair.

10. In an electric igniter, the combination of, a pair of members one rotatable with relation to the other and the said other normally fixed, a pair of contact-terminals one carried by each of said members and one of said terminals being pivoted eccentrically with relation to the axis of rotation and extending substantially radially, and the other of said members projected into the path of movement of the pivoted member between its end and its pivotal point, means for yieldingly holding said pivoted terminals in normal position with relation to its carrier, speed-controlled means operated by the rotatable member for shifting one of the contact-terminals angularly, and a second pair of contact-terminals carried by said members and insulated from the first pair of contact-terminals.

11. In an electric igniter, the combination of, a pair of members one rotatable with relation to the other, a pair of contact-terminals one carried by each of said members and one of said terminals being pivoted eccentrically with relation to the axis of rotation and extending substantially radially, and the other of said members projected into the path of movement of the pivoted member between its end and its pivotal point, means for yieldingly holding said pivoted terminal in normal position with relation to its carrier, speed-controlled means operated by the rotatable member for shifting one of the contact-terminals angularly, and a second pair of contact-terminals carried by said members and insulated from the first pair of contact-terminals.

12. In an electric igniter, the combination of, a pair of members one rotatable with relation to the other and the other normally fixed, a pair of contact-terminals one carried by each of said members and one of said terminals being pivoted eccentrically with relation to the axis of rotation and extending substantially radially, and the other of said members projected into the path of movement of the pivoted member between its end and its pivotal point, means for yieldingly holding said pivoted terminal in normal position with relation to its carrier, speed-controlled means operated by the rotatable member, means for angularly adjusting the normally fixed member and its terminal, and a second pair of contact-terminals carried by said members and insulated from the first pair of contact-terminals.

13. In an electric igniter, the combination of, a casing carrying two sets of one or more terminals, a shaft journaled therein, a plate rotatably mounted on the shaft, a radially-extending contact-arm pivoted upon said plate eccentrically with relation to the shaft and adapted to coöperate with one set of casing-terminals, yielding means for holding said arm in normal position and permitting movement of the arm in either direction, a pair of governor-arms eccentrically pivoted upon the shaft and each having an inclined

P-44

slot engaging a portion of said plate whereby said governor members will operate to shift the plate angularly upon the shaft, and a second contact-arm carried by the shaft in position to coöperate with the other set of casing-terminals and insulated from the pivoted contact-arm.

In witness whereof I have hereunto set my hand and seal, at Indianapolis, Indiana, this 21st day of May, A. D. 1904.

HOMER N. MOTSINGER. [L. S.]

Witnesses:

ARTHUR M. HOOD,

JAMES A. WALSH.

No. 816,083. PATENTED MAR. 27, 1906.

F. O. FARWELL.

CURRENT CONTROLLER FOR IGNITING DEVICES FOR HYDROCARBON ENGINES.

APPLICATION FILED OCT. 21, 1904.

3 SHEETS—SHEET 1.

Fig. 1.

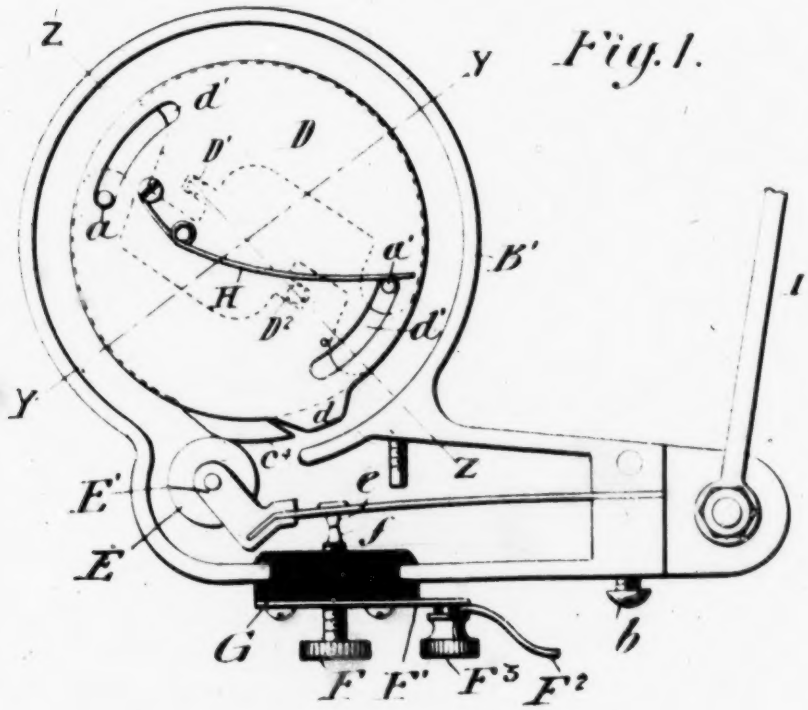

Fig. 2.

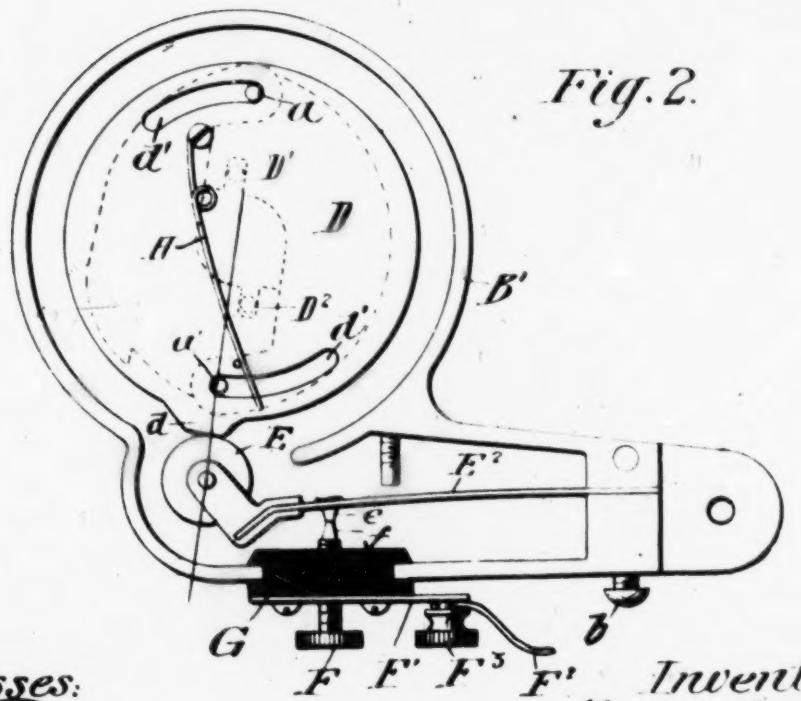

Witnesses:
O. O. Edelin.
Chas. J. O'Neill

Inventor:
Fay O. Farwell,
by Lemmo & Goldsborough,
Attys

No. 816,083. PATENTED MAR. 27, 1906.

F. O. FARWELL.

CURRENT CONTROLLER FOR IGNITING DEVICES FOR HYDROCARBON ENGINES.

APPLICATION FILED OCT. 21, 1904.

3 SHEETS—SHEET 2.

Fig. 3.

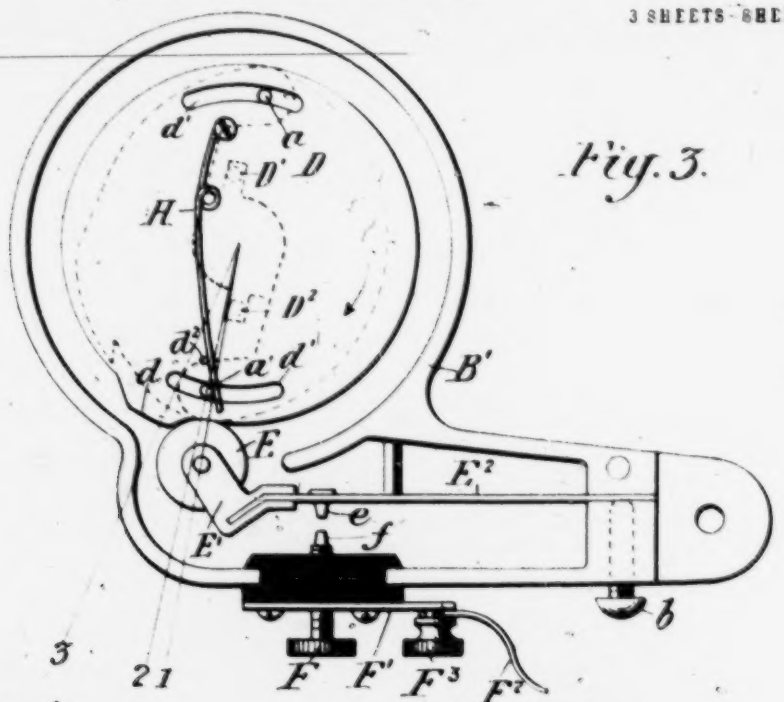

Fig. 4.

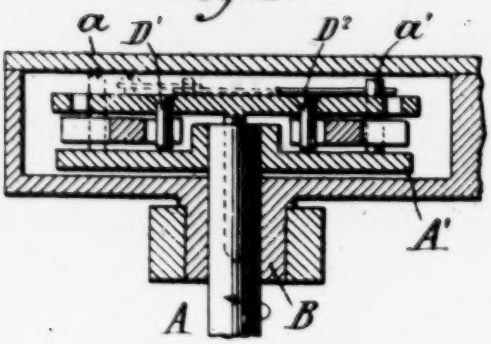

Fig. 5.

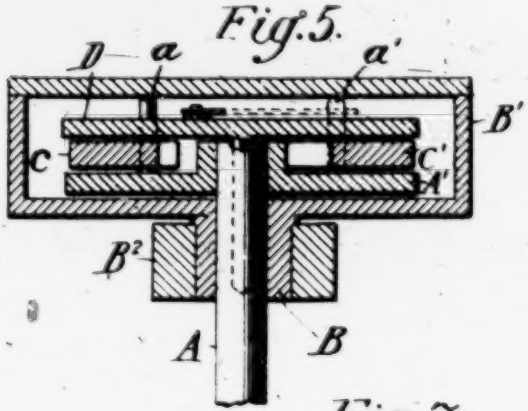

Fig. 6.

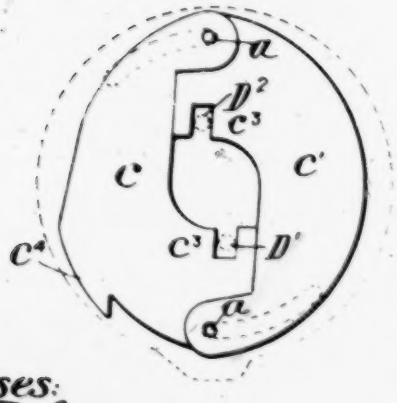

Fig. 7.

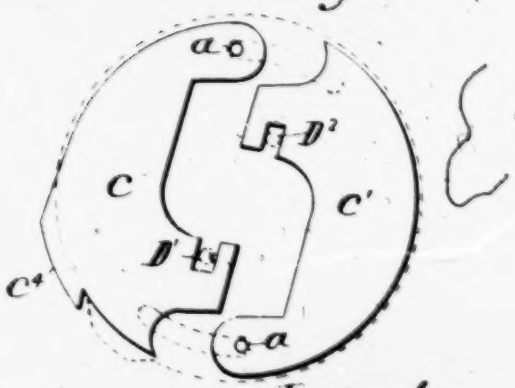

Witnesses:
D. W. Edlin.
Chas. J. O'Neill

Inventor:
Fay O. Farwell,
by Dennis Goldsborough
Attys

No. 816,083. PATENTED MAR. 27, 1906.

F. O. FARWELL.

CURRENT CONTROLLER FOR IGNITING DEVICES FOR HYDROCARBON ENGINES.

APPLICATION FILED OCT. 21, 1904.

3 SHEETS SHEET 3.

Fig. 8.

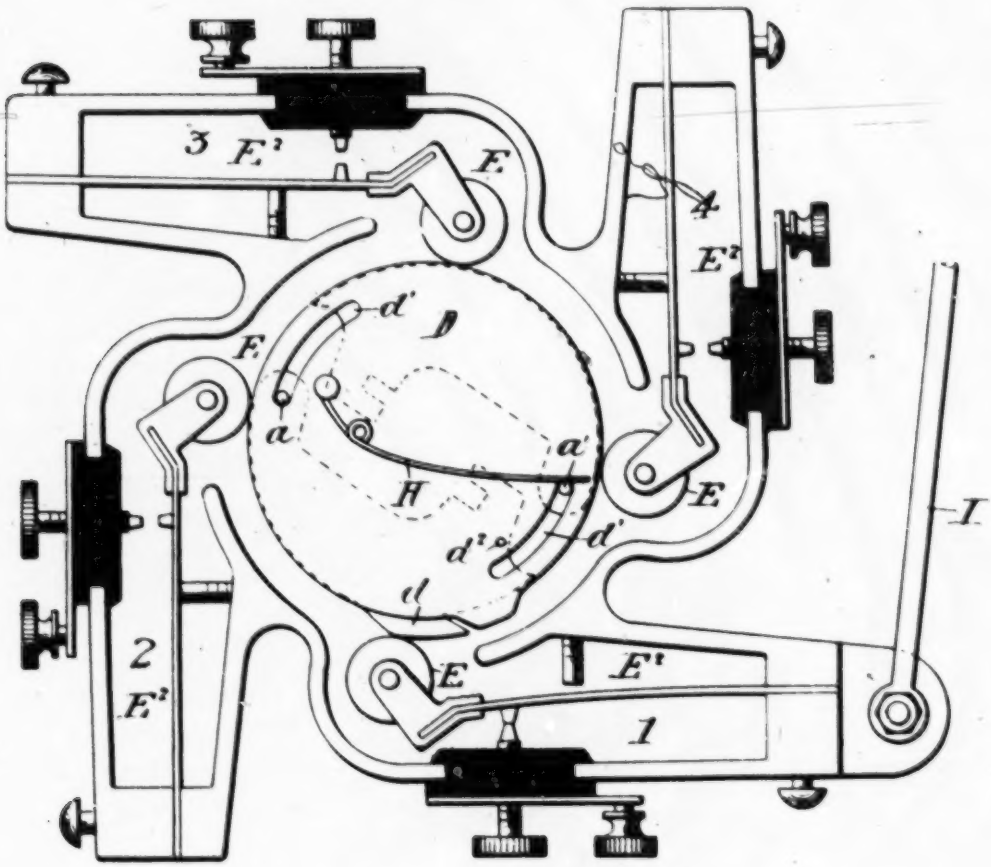

Witnesses
D. W. Edlin.
Chas J. O'Neill

Inventor:
Fay O. Farwell,
by Fennie & Goldsborough,
Attys

UNITED STATES PATENT OFFICE.

FAY O. FARWELL, OF DUBUQUE, IOWA, ASSIGNOR OF ONE-HALF TO THE ADAMS COMPANY, OF DUBUQUE, IOWA, A CORPORATION OF IOWA.

CURRENT-CONTROLLER FOR IGNITING DEVICES FOR HYDROCARBON-ENGINES.

No. 816,083. Specification of Letters Patent. Patented March 27, 1906

Application filed October 21, 1904. Serial No. 229 415.

To all whom it may concern:

Be it known that I, FAY O. FARWELL, a citizen of the United States, residing at Dubuque, county of Dubuque, State of Iowa, have invented certain new and useful Improvements in Current-Controllers for Igniting Devices for Hydrocarbon-Engines; and I do hereby declare the following to be a full, clear, and exact description of the invention, such as will enable others skilled in the art to which it appertains to make and use the same.

This invention relates to igniting devices for hydrocarbon-engines, and has for its object to provide a simple and efficient apparatus for automatically firing the explosive charge of a hydrocarbon-engine at the proper time when the speed of the engine varies, the device being so constructed and arranged that as the speed of the engine increases the length of time that contact is established will be commensurately increased and, furthermore, the contact will be broken sharply and abruptly irrespective of the speed of the engine, so as to insure sparks of equal intensity for all speeds.

It is well known that a hydrocarbon-engine develops the greatest efficiency when the explosion takes place immediately after the piston commences its upward stroke after having passed the dead-center on the compression-stroke. It is also well known that after the primary circuit of the spark has been closed it takes a certain time before the coil is sufficiently saturated to produce a spark and also that a certain additional time after the spark has passed in the cylinders is required before combustion takes place. These several periods of time, while actually very short, are nevertheless sufficient in the aggregate to allow the engine to turn a part of a revolution, greater or smaller, according to the speed of the engine, before the charge is completely exploded. It has been found, for instance, that when an engine is making a speed of one hundred revolutions per minute it will turn something like one thirty-sixth of a revolution after each contact before the explosion takes place, and if the engine were run at one thousand revolutions per minute it would make as much as one-sixth of a revolution after each contact before the corresponding explosion ensues. Therefore to get the best efficiency from a hydrocarbon-engine that is to be run at varying speeds the time of contact with respect to the revolution of the engine must be varied. In common practice this is done by hand. The present invention is designed to vary the contact of the primary circuit automatically. It is also common practice to make the contact long enough for the highest speed; but under these conditions it will be seen that when the engine is run slowly the contact would be maintained for a period much longer than necessary, and therefore entail a considerable waste of current. By regulating not only the time of contact, but the duration thereof, the present invention also serves to effect the greatest possible economy with respect to the battery-current.

In operating spark-coils without a vibrator effective operation is dependent upon a quick rapid separation of the contact-points to produce a spark. If the separation of the contacts is slow or gradual, a proper tension is not produced, and the spark is of little effect in firing the explosive charge. The present invention, in addition to the features above mentioned, contemplates the provision of means for producing a rapid separation of the contact-points, and consequently a fat or heavy spark even when the engine is turned very slowly, as in starting by hand.

Referring to the accompanying drawings, Figure 1 is a plan view of the device, showing the contact in position for the earliest and longest period. Fig. 2 is a similar view showing the contact in position for the latest and shortest period. Fig. 3 is a corresponding view with the contact broken. Fig. 4 is a section on line Y Y of Fig. 1. Fig. 5 is a section on line Z Z of Fig. 1. Fig. 6 is a plan view of the governor-weights in closed position. Fig. 7 is a corresponding view of the weights in expanded position. Fig. 8 is a plan view of a multiple igniting device of the same general character.

In the drawings, A is a driving-shaft or member which is connected by gearing or otherwise to the engine so that it may be rotated at the proper speed to produce the contact, as frequently desired. Secure on the upper end of the shaft A is a disk A′, upon which are mounted two driving-studs *a a′*. Surrounding the upper end of the shaft is the hub B of a casing B′, which surrounds and

incloses the entire mechanism. The said hub is preferably journaled in a bracket or support B^3, so that the entire casing may be conveniently revolved to set the apparatus for the proper position or time of spark.

Pivoted to the studs a a' are the governor-weights c c', which are adapted to swing upon their respective pivots from the position shown in Fig. 6 to that shown in Fig. 7.

Pivoted to the top of the shaft A is a cam-disk D, having two downwardly-projecting studs D′ and D^2 secured therein in such relation as to engage recesses c^3 c^3 in the governor-weights c c'. Extending from the periphery of the cam D is a short cam projection d, which is adapted to engage at one point of its revolution with a roller E, which is supported in a bracket E′, which in turn is mounted upon the end of a spring E^2, the other end of which is secured to the frame or casing B′ by means of a set-screw b. The tendency of the spring E^2 is to force the roller E into contact with the periphery of the disk D. Secured to the spring E′ is a contact-point e, forming one of the terminals of the primary circuit of the spark-coil. The coöperating point f is mounted in an adjusting-screw F, which passes through a brass conducting-strip F′, to which the conducting-wire F^2, forming a branch of the primary circuit, is secured by a thumb-nut F^3, the screw F being insulated from the frame B by means of a fiber or rubber block G.

The studs a a', upon which the governor-weights c c' are pivoted, are passed through segmental slots d' in the cam-disk D, and one of these studs is engaged by a spring H, which is secured to the top of the disk D and is adapted to hold the disk with some resistance from rotating faster than the shaft A. On the outer edge of the governor-weight c is a projection c^4, which when the weights are expanded, as shown in Figs. 1 and 7, increases or adds to the length of the cam d by an amount substantially commensurate with the speed of the engine, thereby holding the contact-points e and f together for a longer period than they would be held by the cam d alone. In the top of the cam-disk D is a pin d^3, placed in such position that when the spring H is in contact with it the end of said spring will be so held with respect to the slot d' that substantially one-fourth of the length of said slot may be traversed by the pin a a' before the latter comes in contact with the spring, the object of which construction will be hereinafter explained.

The operation of the device as above described is substantially as follows: The shaft A, and with it all of the rotatory parts, including the cam-disk D, are rotated in the direction indicated by the arrow. In starting a gas or gasolene engine it is usually turned by hand and the speed is very slow. Consequently disk D has a correspondingly-slow rotatory motion, and the cam d engages roller E and forces the latter, with its spring E^2, outward until contacts e and f are brought together. This condition is maintained while the short cam d lies under the roller E, and a line drawn through the centers of disk D and roller E would pass through the stud a', as shown in Fig. 2. A slight further movement of the disk D, however, would cause the roller E to begin to descend the side of the cam d, and the pressure of the spring E^2 would cause disk D and cam d to move quickly forward in the direction in which it is rotating—that is to say, the force of spring E^2 applied to the disk D would accelerate the movement of the latter beyond the normal speed imparted thereto from shaft A. For instance, referring to Fig. 3, if the distance which the shaft A rotates at the time of separation of the contacts be indicated by the angular distance between lines 1 and 2 the movement of the cam d would be represented by the angular distance between lines 1 and 3 for the same period of time. Thus the cam would be forced out from under the roller E by the action of spring E^2, and the contacts e f would be separated by a quick snappy action, which would of course produce a heavy spark. It will be seen, furthermore, that this quick separation of the contacts will take place independently of the speed of the engine, so that a practically uniform spark will be produced whether the engine be turning slowly or rapidly. As the speed of the engine increases centrifugal force will tend to throw the governor-weights c c' outward from the position shown in Fig. 6 to that in Fig. 7, thereby causing the cam-disk D and the cam d to be advanced in the direction of rotation and also causing the projection c^4 to extend beyond the periphery of the disk D, and thereby add its length to that of the cam d, causing the contact-points e and f not only to be brought into engagement at an earlier point in the revolution of the shaft A, but also causing them to remain in contact for a longer part of the revolution. When the speed of the engine decreases, the spring H pressing against the pin a' moves the disk D in the direction opposite to its rotation, and thereby returns the cam d thereon to a position where the charge will be ignited at a later period.

As the entire frame B′ is journaled on its hub B in the support B^3, it may be conveniently swung around for properly locating the spark with reference to the stroke of the engine, for which the frame is secured in position by means of the rod I. This swinging movement of the frame may also be employed with advantage when it is desired to have a late spark while the engine is running fast, by which means the speed of the engine is sometimes governed or controlled.

When it is desired to employ the above-desired igniting device upon a multiple-cylinder engine, the casing B' is made of sufficient size to contain a number of contacts corresponding to the number of engine-cylinders. In Fig. 8, for example, there is illustrated an igniter for a four-cylinder engine, the contacts being equally spaced within the casing B' around the shaft A, so that each of the movable contacts will be operated upon at the proper time by the rotation of cam-disk D and the governor-weights *c c'*.

Having thus described my invention, what I claim is—

1. An igniting device for hydrocarbon-engines, comprising normally separated contacts, a rotatory driven member adapted to engage one of said contacts to bring the contacts together, a driving member for said rotatory driven member, the latter being capable of a limited rotatory movement independent of its driver, means connected with the movable contact to accelerate the movement of the rotatory driven member after the latter has brought said contacts together, whereby the contacts will be quickly separated, and means for regulating the period of engagement of the contacts to maintain such period substantially constant for various speeds of the engine.

2. An igniting device for hydrocarbon-engines, comprising normally separated contacts, a rotatory disk having a cam adapted to engage one of said contacts to bring the contacts together, a driving-shaft for said disk, connections between the disk and shaft to permit a limited independent rotatory movement of the disk, a spring connected with the movable contact to accelerate the movement of the disk after the latter has brought said contacts together, whereby the contacts will be quickly separated, and means for regulating the period of engagement of the contacts to maintain such period substantially constant for various speeds of the engine.

3. An igniting device for hydrocarbon-engines, comprising normally separated contacts, a rotatory member adapted to engage one of said contacts to bring the contacts together, a driving member for said rotatory member, connections between the driving and rotatory members to permit a limited independent rotatory movement of said rotatory member, a centrifugal governor operated by the driving member to move the rotatory member in relation to the driving member, whereby the contact will be made at a time earlier or later in the movement of the driving member, means connected with the movable contact to accelerate the movement of the rotatory member after the latter has brought said contacts together, and means for regulating the period of engagement of the contacts to maintain such period substantially constant for various speeds of the engine.

4. An igniting device for hydrocarbon-engines, comprising normally separated contacts, a driving member, a rotatory member having a pin-and-slot connection with the driving member to permit a limited independent motion of the rotatory member, means on the rotatory member to bring said contacts together, means connected with the movable contact to accelerate the movement of the rotatory member after the latter has brought the contacts together, whereby the contacts will be quickly separated, and means for regulating the period of engagement of the contacts to maintain such period substantially constant for various speeds of the engine.

5. An igniting device for hydrocarbon-engines, comprising normally separated contacts, a rotatory disk having a cam adapted to engage one of said contacts to bring the contacts together, a driving member for said disk, pin-and-slot connections between the disk and driving member to permit a limited independent rotatory movement of the disk, a spring connected with the movable contact to accelerate the movement of the disk after the latter has brought said contacts together, whereby the contacts will be quickly separated, and means for regulating the period of engagement of the contacts to maintain such period substantially constant for various speeds of the engine.

6. An igniting device for hydrocarbon-engines, comprising normally separated contacts, a rotatory member adapted to engage one of said contacts to bring the contacts together, a driving member for said rotatory member, pin-and-slot connections between the driving and rotatory members to permit a limited independent rotatory movement of said rotatory member, a centrifugal governor operated by the driving member to move the rotatory member in relation to the driving member, whereby the contact will be made at a time earlier or later in the movement of the driving member, means connected with the movement of the rotatory member after the latter has brought said contacts together, and means for regulating the period of engagement of the contacts to maintain such period substantially constant for various speeds of the engine.

7. An igniting device for hydrocarbon-engines, comprising a fixed contact and a movable spring-contact, a driving-shaft rotated at a speed having a fixed relation to the speed of the engine, a disk free to rotate to a limited extent faster or slower than said shaft, a cam or projection on said disk adapted to engage the spring-contact to close the contacts, and a weight-arm interposed between the shaft and the disk and operating by centrifugal force to move the disk with respect to the shaft, said weight-arm having a projection

cooperating with the cam on the disk all so constructed and arranged that the weight-arm controls the length of time of contact with respect to the rotation of the shaft and the spring-contact accelerates the movement of the disk to secure a quick break at the contacts.

8. An igniting device for gas or gasolene engines, comprising normally separated contacts, a driving-shaft rotated at a speed that has a fixed relation to the speed of the engine, a disk free to rotate to a limited extent faster or slower than said shaft, a short projection or cam on said disk adapted to engage the movable contact and close the contacts for a short period, two weight-arms interposed between the shaft and disk, said weight-arms affected by centrifugal force and adapted to move said disk in relation to said shaft, a projection or cam on one of said weight-arms adapted to move out and add to the length of the cam on said disk, whereby the length of time of the electrical contact will be made longer or shorter.

9. An igniting device for gas or gasolene engines, comprising normally separated contacts, a driving-shaft rotated at a speed that has a fixed relation to the speed of the engine, a disk connected to said driving-shaft, a projection or cam on said disk adapted to engage the movable contact and close the contacts, one or more weighted arms secured to said disk, and a projection or cam on one of said arms adapted to be moved by centrifugal force and add its length to the cam on said disk, whereby an electrical contact for a longer or shorter period will be made.

In testimony whereof I affix my signature in presence of two witnesses.

FAY O. FARWELL.

Witnesses:
GEORGE WEARMOUTH,
FLOYD A. OATEY.

No. 857,715 PATENTED JUNE 25, 1907

A. E. BRILLIÉ.

MEANS FOR AUTOMATICALLY TIMING THE SPARK FOR PRODUCING IGNITION IN EXPLOSION MOTORS.

APPLICATION FILED DEC. 24, 1906

2 SHEETS—SHEET 1.

Fig. 1.

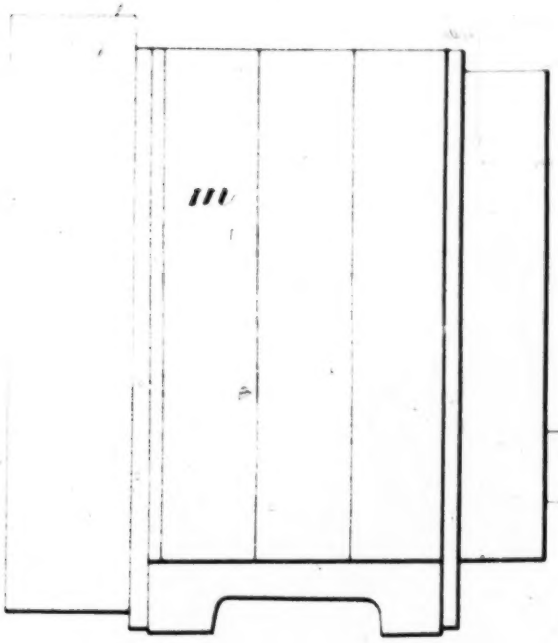

Fig. 2

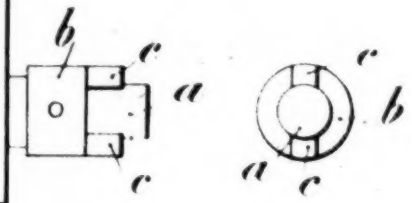

Fig. 3.

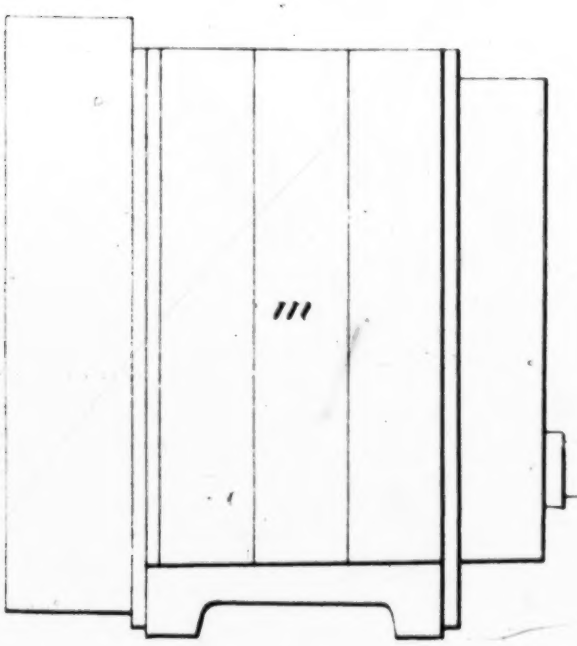

Fig. 6.

Witnesses:
Laura Franck
Kathryn Donovan

Inventor:
Auguste Eugène Brillié
by Albert Mack
his Attorney

No. 857,715. PATENTED JUNE 25, 1907.

A. E. BRILLIÉ.

MEANS FOR AUTOMATICALLY TIMING THE SPARK FOR PRODUCING IGNITION IN EXPLOSION MOTORS.

APPLICATION FILED DEC. 24, 1906.

2 SHEETS—SHEET 2.

Fig. 3.

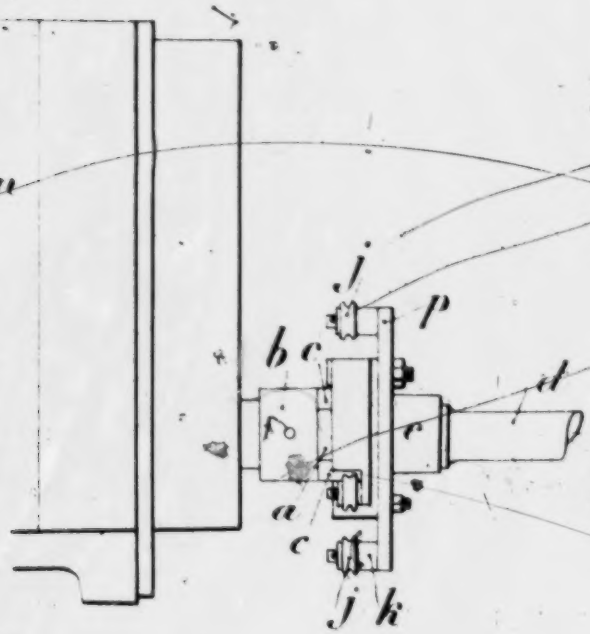

Fig. 4.

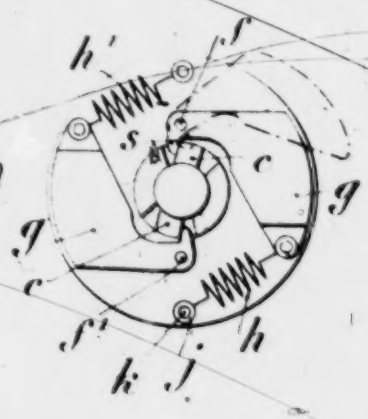

Fig. 7.

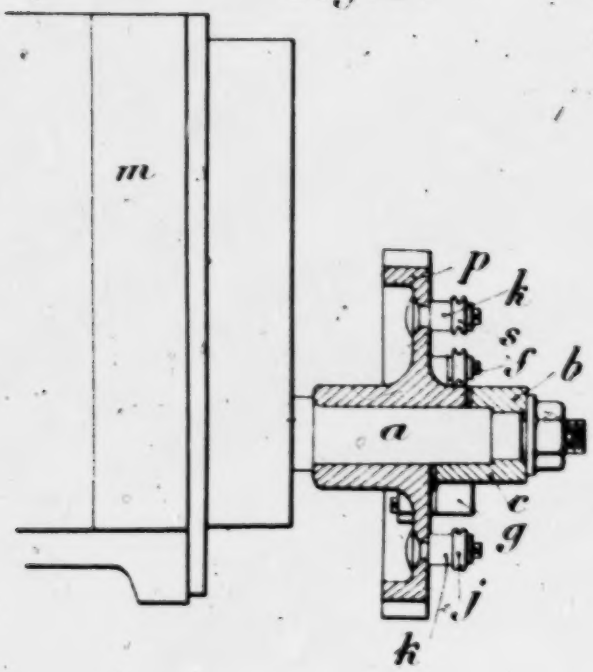

Witnesses:
Emma Franck
Kathryn Donovan

Inventor:
Auguste Eugène Brillié
by O. D. Munk

UNITED STATES PATENT OFFICE.

AUGUSTE EUGÈNE BRILLIÉ, OF PARIS, FRANCE, ASSIGNOR TO SOCIÉTÉ ANONYME DES AUTOMOBILES EUGÈNE BRILLIÉ, OF PARIS, FRANCE.

MEANS FOR AUTOMATICALLY TIMING THE SPARK FOR PRODUCING IGNITION IN EXPLOSION-MOTORS.

No. 857,715. Specification of Letters Patent. Patented June 25, 1907.

Application filed December 24, 1906. Serial No. 349,227.

To all whom it may concern:

Be it known that I, AUGUSTE EUGÈNE BRILLIÉ, a citizen of France, residing at 60, Boulevard Periere, Paris, France, have invented new and useful improvements in Means for Automatically Timing the Spark for Producing Ignition in Explosion-Motors, of which the following is a specification.

The present invention relates to means for automatically timing the spark for producing ignition in explosion motors.

When the motor is working at low speed or in starting the same the ignition should occur near the dead point of the piston stroke, and as the speed of the motor increases the explosions or ignitions should be correspondingly advanced. The object of the present invention is to produce means for automatically accommodating the time of the spark production and consequent ignition or explosion to the speed of the motor.

In the accompanying drawing wherein two forms of the invention are illustrated, Figure 1 is a side elevational view of a magneto igniter; Fig. 2 is an end elevational view of the magneto armature shaft and its coupling member; Fig. 3 is a side elevational view of the magneto igniter coupled to the motor shaft (the motor being omitted); Fig. 4 is an elevational view of a disk and certain accessorial features employed in my invention; Fig. 5 is a side elevational view of a modified form of magneto igniter; Fig. 6 is an end elevational view of the magneto shaft and coupling member thereon; and Fig. 7 is a side elevational view partly in section, of a modified form of the invention.

In the drawing *m* indicates a magneto igniter of any approved form provided with the usual armature shaft or spindle *a*. In the form of the invention illustrated in Figs. 1 to 4 and wherein the magneto igniter is assumed as being driven by means of a spindle the shaft *a* carries a sleeve *b* having projections *c c*, thus providing the male member of a coupling, the female member of which is carried by the motor shaft as hereinafter described.

The motor shaft is designated in the drawing by the character *d* (no motor being shown as the same forms no part of the present invention) and is provided at or near its free end with a rigidly secured socket *e*, having internal grooves or cut out portions, preferably sector shaped, to receive the projections *c c* of the sleeve *b* and to permit such projections to be rotated therein within limits defined by the walls of the grooves or cut out portions. It will be understood that the socket *e* forms the female member of the coupling between the motor shaft and magneto igniter shaft.

Secured to or near the forward end of the motor shaft *d*, is a disk *p*, preferably of circular form, and carrying upon the face directed toward the magneto igniter a pair of pawls or fingers, *s*, *s*, pivoted upon the pins *f*, *f'* and having weighted extensions *g*, *g*, preferably formed integrally therewith. To the lower end of each extension *g* is secured one end of a retractile spring *h* or *h'* the other end of which engages a pulley *j*, secured to a stud *k* projecting outwardly from the face of the disk *p*.

It will be understood that when the motor and magneto igniter shafts are coupled, the projections *c c* reach into the grooves formed in the socket *e* and the fingers *s s* are in engagement with the projections *c c* as shown in Fig. 4. In starting the motor or when the latter is running at low speed the relative position of the parts will be that shown in full lines in Fig. 4, but when the motor and its shaft *d* are running at high speed, the weighted extensions *g* will overcome the tension of the springs *h* or *h'* and fly apart under the influence of centrifugal force, as shown in dotted lines in the same figures, causing the fingers *s s* to ride up on the projections *c c* and thus causing the armature shaft *a* to advance relatively to the shaft *d* and as a consequence advancing the time of the spark production by the armature and its appurtenant parts, (the armature and its appurtenant parts referred to not being shown on the drawing). The extent of the advance of the magneto igniter shaft is dependent upon the extent to which the fingers *s s* ride up on the projections *c c*, the latter function being governed by the rate of rotation of the shaft *d*.

In the form of invention illustrated in Figs. 5 to 7, the magneto igniter *m*, carries upon its armature spindle or shaft *a* the disk *p* having gear teeth cut in its periphery through the medium of which the shaft *a* may be driven. *b* represents the sleeve having the projections *c c* and is carried by the motor

P-60

shaft. The disk *p* carries the fingers *s* and other parts above described as held thereby and is grooved to receive the projections *c c* of the sleeve *b*. The form of invention illustrated in Figs. 5 to 7 is a virtual reversal of that shown in Figs. 1 to 4 and operates in substantially the same manner.

Having thus described my invention what I claim as new and desire to secure by Letters Patent is:

1. In a device of the character described, the combination with a magneto igniter provided with an armature shaft, of a sleeve thereon carrying projections, a motor shaft provided with a socket having grooves or cut out portions into which said projections are adapted to enter, and means acting upon said projections for advancing the armature shaft relatively to the motor shaft.

2. In a device of the character described, the combination with a magneto igniter provided with an armature shaft, of a sleeve on said shaft having projections formed thereon, a motor shaft carrying a socket having sector shaped grooves wherein the said projections are adapted to enter and have limited rotary motion, and means engaging said projections to thereby advance the armature shaft relatively to the motor shaft upon rotation of the latter.

3. In a device of the character described, the combination with a magneto igniter provided with an armature shaft, of a sleeve carried by said shaft and having lateral projections, a motor shaft, a socket upon said motor shaft having grooves wherein the projections enter and have limited rotary motion, a disk carried by said motor shaft, and means carried by said disk for engaging said projections and advancing the armature shaft in a degree corresponding to the rate of rotation of said motor shaft.

4. In a device of the character described, the combination with a magneto igniter provided with an armature shaft, of a sleeve on said shaft having lateral projections, a motor shaft provided with a socket having grooves into which said projections are adapted to enter, a disk rigidly secured to said motor shaft, and weighted fingers pivoted to said disk, said fingers being adapted to engage said projections and advance the armature shaft relatively to the motor shaft in a degree corresponding to the rate of rotation of the latter.

5. In a device of the character described, the combination with a magneto igniter, provided with an armature shaft, of a sleeve on said shaft having lateral projections, a motor shaft provided with a socket having grooves into which said projections are adapted to enter, a disk rigidly secured to said motor shaft, fingers pivoted upon said disk and weighted extensions formed integrally with said fingers.

6. In a device of the character described, the combination with a magneto igniter provided with an armature shaft, of a sleeve on said shaft having lateral projections, a motor shaft provided with a socket having grooves into which said projections are adapted to enter, a disk rigidly fixed upon said motor shaft forward of said socket, a plurality of fingers pivoted upon said disk, weighted extensions formed integrally with said fingers, and retractile springs controlling said extensions.

In testimony whereof I have signed my name to this specification in the presence of two subscribing witnesses.

AUGUSTE EUGENE BRILLIÉ.

Witnesses:

LOUIS GARDET,

HANSON C. COXE.

No. 863,151. PATENTED AUG. 13, 1907.

B. P. CHURCHILL.

AUTOMATIC SPARK ADVANCER.

APPLICATION FILED JULY 30, 1906.

Fig. 1.

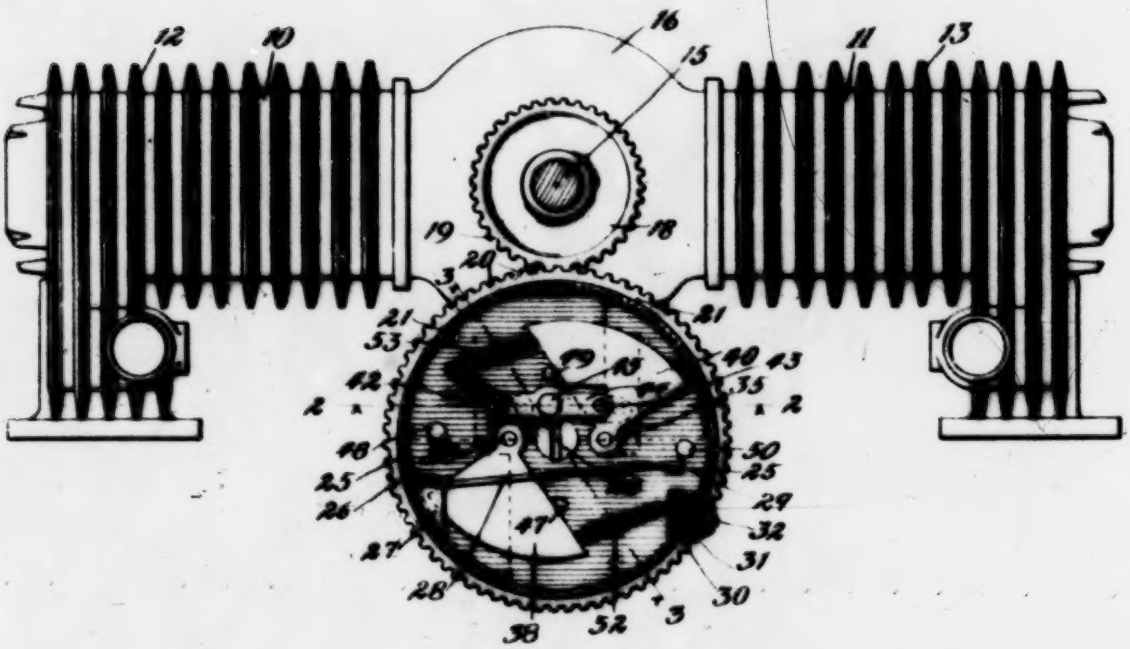

Fig. 2.

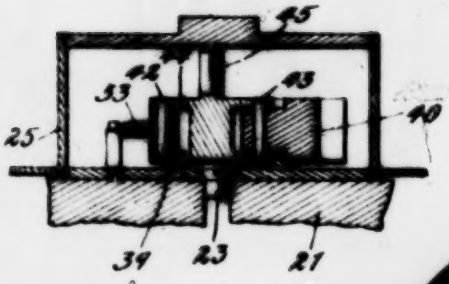

Fig. 3.

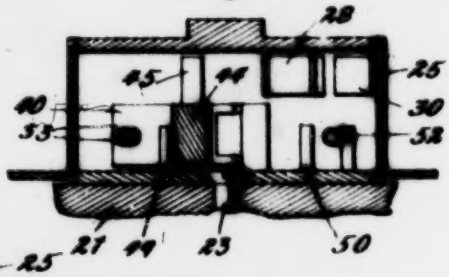

Fig. 4.

Witnesses:

Ira D. Perry

G. V. Demarus

Inventor:

Benn Pitman Churchill.

By Cheever & Cox

Attys.

UNITED STATES PATENT OFFICE.

BENN PITMAN CHURCHILL, OF MILWAUKEE, WISCONSIN, ASSIGNOR OF TWO-THIRDS TO RETTA PIERCE DAVENPORT AND EVERETT O. ROCKWELL, OF CHICAGO, ILLINOIS.

AUTOMATIC SPARK ADVANCER.

No. 863,151. Specification of Letters Patent. Patented Aug. 13, 1907.

Application filed July 28, 1906. Serial No. 328,186.

To all whom it may concern:

Be it known that I, BENN PITMAN CHURCHILL, a citizen of the United States, residing at Milwaukee, in the county of Milwaukee and State of Wisconsin, have invented a certain new and useful Improvement in Automatic Spark-Advancers, of which the following is a specification.

My invention relates to mechanism for controlling sparking apparatus of gas engines ordinarily used upon automobiles.

As is well known, it is essential to the proper operation of a gas engine that the gas in the working cylinder be fully exploded at the instant the piston begins its working stroke, and as it always takes substantially the same amount of time to explode the gas within the cylinder, it is necessary, where the exploding or sparking is affected by the revolution of a wheel or other corresponding part within the engine mechanism, to cause such revolving mechanism to operate the sparking mechanism at a considerable earlier point in its revolution than is necessary when the engine is running slower. In other words, it is necessary to advance the point of spark.

The object of my invention is to provide automatic mechanism by means of which the point of spark is advanced a proper amount as the speed of the engine increases and is varied as the speed of the engine varies.

More in detail my invention consists in the application of a governor mechanism adapted to be moved by the varying speed of the engine to a pin which operates the sparking mechanism, the governing mechanism being so constructed and arranged that this pin is moved backward and forward in a circle about the center of the wheel or shaft which carries it, a sufficient amount so that it operates the sparking mechanism earlier or later as required.

My invention further consists in details of construction which will be hereafter more fully described and claimed.

Figure 1 is a side external view of the two cylinders of a gas engine, and a transverse sectional detail view of the primary and secondary shafts of said engine and the mechanism of my invention for sparking one of the above cylinders applied thereto, there being a duplicate device for the other cylinder located at some convenient point, usually on the opposite side of the two cylinders. Fig. 2 is a sectional detail view of my preferred mechanism taken on the line 2—2 of Fig. 1; Fig. 3 is a corresponding sectional detail view taken on the line 3—3 of Fig. 1; Fig. 4 is a detail view showing the position of the governing mechanism when the engine is running at full head, and when the parts have traveled from the position of Fig. 1 through approximately 180° to a point in which the engine is in the act of sparking.

While the cylinders of the gas engine form no part of the invention here in question, I have, in order to show the relation of the mechanism to the gas engine, illustrated two gas engine cylinders 10 and 11, having on their exterior surfaces cooling devices 12, 13 of the ordinary type. These two cylinders are arranged on opposite sides of the primary crank shaft 15 carrying within the casing 16 crank-arms and connecting-arms (not shown) connected with pistons (not shown) within the cylinders.

On the shaft 15 is a gear wheel 18, having on its circumference gear teeth 19 meshing with other gear teeth 20 upon a larger wheel 21 rigidly secured to the secondary shaft 23 of the engine. Mounted about, but independent of this shaft 23 is a stationary casing 25 forming a part of the frame of the engine. On one side of this frame 25 and connected thereto by a screw 26, or other suitable means, is a contact 27 to which is rigidly secured one end of a spring-switch 28. This switch 28 carries upon its opposite end a contact-point 29 adapted to temporarily engage the contact-block 30. This contact-block 30 is insulated from the casing 25 by the insulation 31, or other suitable means, and has connected to it a binding post 32. This binding post 32 is, in a gas engine, always connected to a battery or other source of electrical energy (not here shown), and is thence connected in the ordinary manner through an induction coil to one terminal of the spark-plug within the engine cylinder. The opposite side of the spark-plug is always connected to the frame of the engine, so that electricity can travel from said second side of the spark plug back to the block 27 and switch 28.

The parts thus described constitute ordinary construction, and, in this form no part of my invention.

In order to cause the switch 28 to move from the position of Fig. 1 to that of Fig. 4, and in order to cause the moment of sparking to be advanced, as and for the reasons heretofore stated, I add to the mechanism just described that of my invention, which I will now describe. Upon the wheel 21, heretofore described, and inside the casing 25, adjacent to the switch 28, but clear of said switch, I place two pins 34 and 35, equidistant from the center of the secondary shaft 23. Upon the pin 34 I journal a triangular governor weight 38 having extending from it on the opposite side of the pin 34, a short lever arm 39, with the result that this arm and the governor weight form together a lever of the first class pivoted at 34. Similarly, I journal upon the pin 35 and within the casing 25, another governor weight 40 exactly like the one 38 heretofore described, except that the extension arm is omitted. Upon the arm 39 is a pin 42, a certain distance from the center of the pin 34. Upon the body of the governor weight 40 is a pin 43, a distance from the pin 35 equal to the distance of the pin 42 from the pin 34. Both pins 42 and 43 are, as shown in the drawings, upon the same side

of a center line of the wheel 21, drawn through the pins 34 and 35, so that a connecting link 44 pivotally connected to the pins 42 and 43, is, as shown, to one side of the center of the secondary shaft and the wheel 21. On this connecting link 44 is a contact pin 45 of such a length and location that it will, at one point in the revolution of the wheel 21, strike the switch 28 and move it from the position of Fig. 1 to that of Fig. 4, after passing which point the spring switch 28 moves back to the position of Fig. 1.

Upon the wheel 21 I provide two stops 47 and 48 adapted to limit the motion of the governor weight 38, and in corresponding positions upon the wheel I provide two other stops 49 and 50 adapted to limit the motion of the governor weight 40. Connected to the governor weights 38 and 40 are suitable springs 52 and 53 adapted to hold said weights in the normal position shown in Fig. 1.

In the operation of the mechanism, assume that the parts are as shown in Fig. 1, in which position the engine starts from rest and moves slowly. The contact pin 45 will, during rotation at this speed, be carried around in a circle by the wheel 21, and will, every time it strikes the spring switch 28, move it to the position of Fig. 4, thereby exploding gas within the engine cylinder. As, now, the speed of the engine is accelerated, the governor weights 38 and 39 are, in the well-known manner, moved outward from the position of Fig. 2 toward that of Fig. 4, against the action of springs 52 and 53. This motion of the governor weights tends to move the pin 45 clockwise in the arc of a circle about the center of the wheel 21. Or, in other words, to angularly advance it with reference to a fixed point upon the circumference of the wheel 21, so that as the wheel revolves, it contacts with the spring switch 28 sooner in the revolution of the wheel 21 than it does when the parts are in the position of Fig. 1. When this outward motion of the governor weights has reached its maximum, or the position of Fig. 4, this contact-pin 45 is advanced as much as possible, and as much as is necessary for the proper operation of the engine. When, now, the engine begins to slow down, the governor weights begin to move backward under the action of the springs 52 and 53, from the position of Fig. 4 to that of Fig. 1, with the result that the contact-pin 45 is withdrawn or retracted from this advanced position a proper amount to give the engine the proper sparking point for the speed at which the engine is then running.

Having thus described my invention, what I claim as new and desire to secure by Letters-Patent is

1. In a gas engine, the combination of a rotating member, a switch connected with the sparking mechanism of the engine, a governor weight movable with reference to the rotating member, a link connected to said governor, extending along one side of the center of the rotating member, a contact mounted on the link adapted to engage the switch, means for so guiding said link that as the governor weight moves it moves said contact on the link about the center of the rotating member for the purposes set forth.

2. In a gas engine, the combination of a rotating member, a switch connected with the sparking mechanism of the engine, a governor weight pivoted to the rotating member at one side of its center, a link connected to said governor, extending along one side of the center of the rotating member, a contact mounted on the link adapted to engage the switch, means for so guiding said link that as the governor weight moves it moves said contact on the link in approximately the arc of a circle about the center of the rotating member for the purposes set forth.

3. In a gas engine, the combination of, a rotating member, a stationary switch connected with the sparking mechanism of the engine, two governor weights pivoted to the rotating member on opposite sides of its center, an arm extending from one of said weights, a link connecting said extending arm on one weight and the body of the other weight, spring mechanism holding said weights in normal position, and a contact member mounted on said link adapted to engage said switch, the whole arranged to operate as described, for the purposes set forth.

In witness whereof, I have hereunto subscribed my name in the presence of two witnesses.

BENN PITMAN CHURCHILL.

Witnesses:
HOWARD M. COX,
E. C. ROCKWELL.

P-65

A. L. RIKER.

SPARK ADJUSTING STARTING MEANS FOR AUTOMOBILES.

APPLICATION FILED NOV. 4, 1902

906,290. **Patented Dec. 8, 1908**

3 SHEETS—SHEET 1

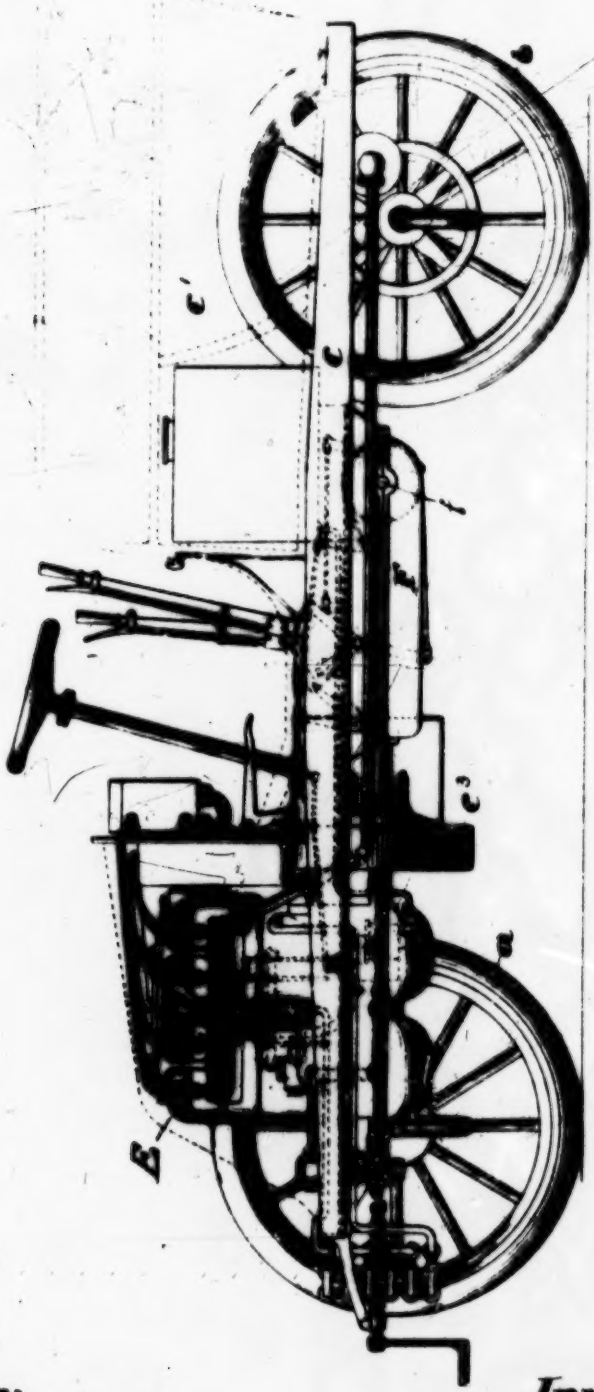

Fig. 1.

Witnesses:
Walter C. Lombard
Thomas B. Booth

Inventor:
Andrew L. Riker,
by Marcus L. Emery
Atty.

A. L. RIKER.

SPARK ADJUSTING STARTING MEANS FOR AUTOMOBILES.

APPLICATION FILED NOV. 4, 1903.

906,290. Patented Dec. 8, 1908

3 SHEETS—SHEET 2

Fig. 2.

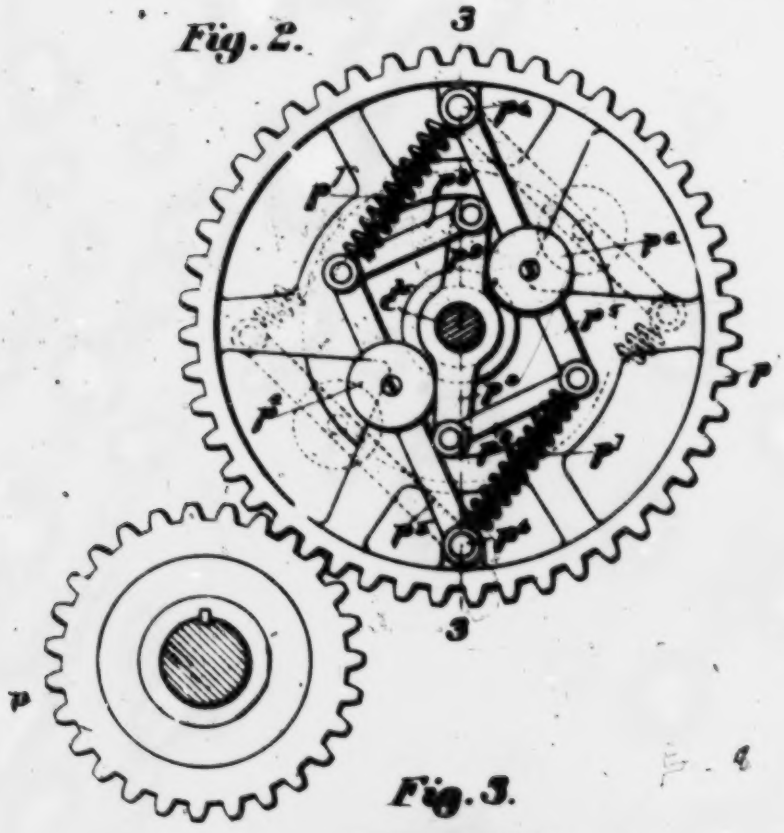

Fig. 3.

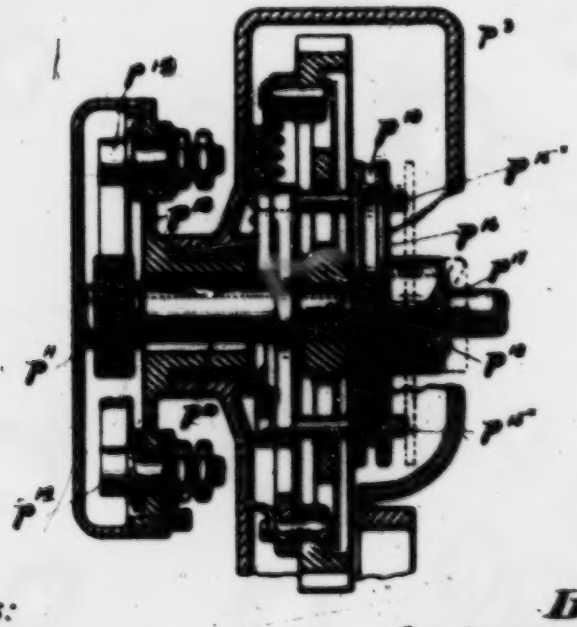

Witnesses:
Walter G. Lombard
Thomas B. Buell

Inventor:
Andrew L. Riker,
by Edmund L. Emery Atty.

A. L. RIKER.

SPARK ADJUSTING STARTING MEANS FOR AUTOMOBILES.

APPLICATION FILED NOV. 4, 1907.

906,290. Patented Dec. 8, 1908

3 SHEETS—SHEET 3

Fig. 4.

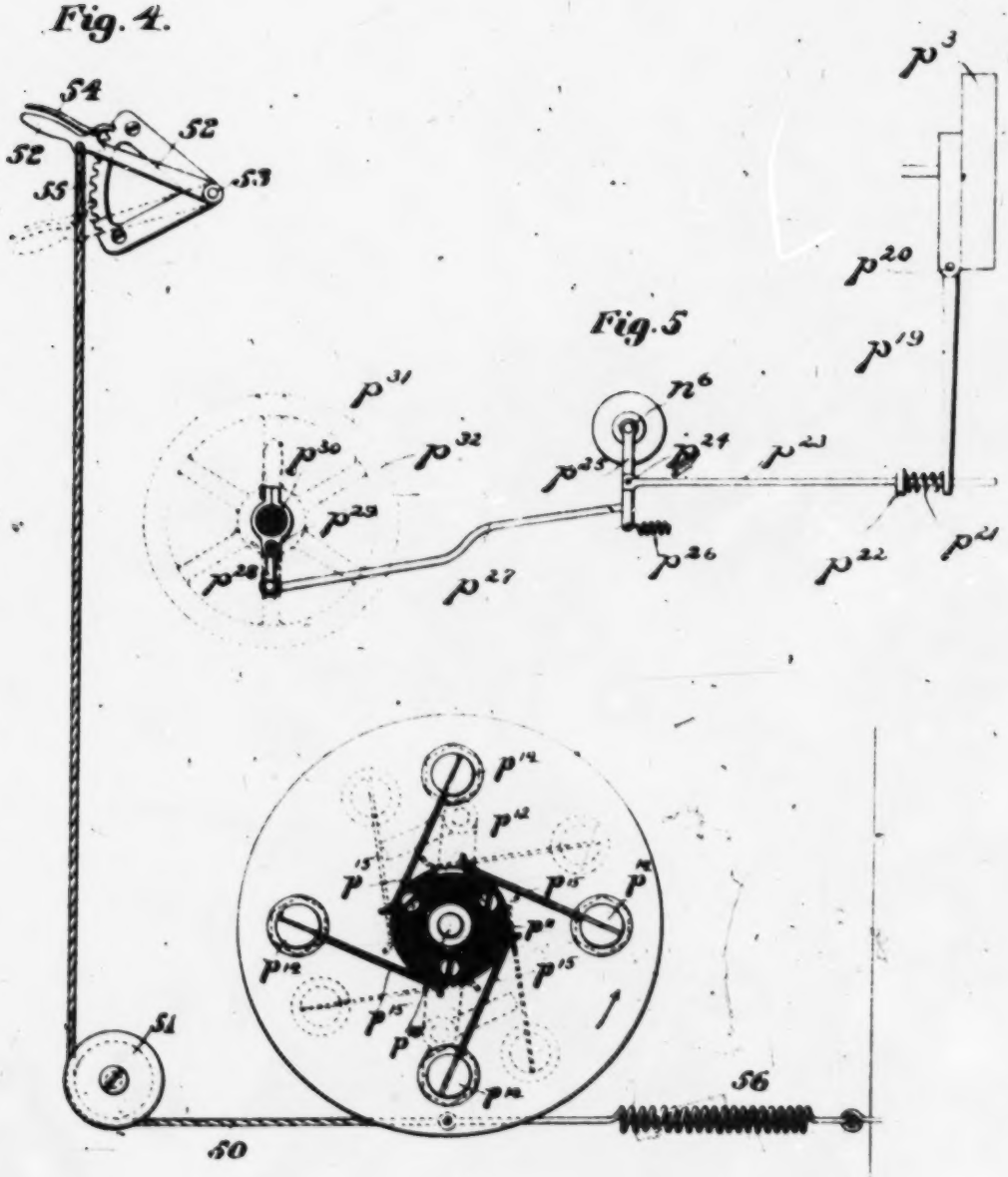

Witnesses:
Walter G. Lombard
Thomas B. Smith

Inventor:
Andrew L. Riker,
by Warren L. Emery
Atty.

UNITED STATES PATENT OFFICE.

ANDREW L. RIKER, OF SHORT HILLS, NEW JERSEY, ASSIGNOR TO THE "LOCOMOBILE" COMPANY OF AMERICA, OF NEW YORK, N. Y., A CORPORATION OF WEST VIRGINIA.

SPARK-ADJUSTING STARTING MEANS FOR AUTOMOBILES.

No. 906,290. Specification of Letters Patent. Patented Dec. 8, 1908.

Application filed November 4, 1903. Serial No. 180,032.

To all whom it may concern:

Be it known that I, ANDREW L. RIKER, a citizen of the United States, residing at Short Hills, in the county of Essex and State of New Jersey, have invented an Improvement in Spark-Adjusting Starting Means for Automobiles, of which the following description, in connection with the accompanying drawings, is a specification, like letters on the drawings representing like parts.

My invention relates to motor vehicles of the type employing internal combustion engines, wherein the ignition is produced by an electric spark.

In starting an internal combustion engine, the sparking and ignition should occur immediately at the beginning of the working stroke of the piston, but as the engine gathers speed, the sparking must be advanced, it occurring, at high speed, frequently at or about the middle of the return stroke next preceding the working stroke, this early ignition being necessary not only to furnish a cushion for the reciprocating parts of the engine, but also to provide the expansive power resulting from the ignition in sufficient time to perform its work in driving the rapidly moving piston.

The prevailing practice at present is to provide motor vehicles with suitable speed responsive, governing means, which shall advance the sparking in proportion to the increase of speed. But I have found it difficult to provide a speed responsive device or governor which shall be reliable and properly responsive at high speeds and which will also produce the required adjustments of contacts at very low speeds, particularly when the engine is stopped and the contacts are to be left in position for again starting the engine.

My present invention comprehends a speed responsive or governing means which shall furnish the required adjustment of contacts for high speeds in combination with independent adjusting means preferably manually operable for preliminarily adjusting the contacts for sparking in such a manner as to enable the engine to be started.

My invention will best be understood from a description of one embodiment thereof in a typical motor vehicle.

Referring to the drawings,—Figure 1, in side elevation, illustrates a typical motor vehicle equipped with devices illustrating one embodiment of my invention; Fig. 2 is an enlarged detail of one form of speed responsive or governing means; Fig. 3 is a longitudinal section on the dotted line, 3—3, Fig. 2; Fig. 4 is a detail illustrating the fixed and movable contacts and independent means for adjusting the same for starting the engine; and, Fig. 5, a diagram illustrating the connections between the governor and throttling devices.

Referring to the drawings, particularly to Fig. 1, the motor vehicle may be of any suitable or desired type, the same as illustrated comprising the steering and propelling wheels, *a*, *b*, the spring supported frame, *c*, body, *d*, internal combustion engine, E, clutch, *e*, transmission gear, F, jackshaft, *f*, suitably connected with and to rotate the propelling or driving wheels, *b*, all of which are and may be of usual or desired construction so far as concerns my present invention.

Referring now particularly to Figs. 2, 3, and 4, the engine crankshaft as here shown, is provided with a pinion, *p*, which drives a wheel, *p'*, keyed to and rotating the shaft, *e*, which may be the cam shaft for actuating the valve mechanism of the engine. This wheel, *p'*, carries a pair of centrifugal weights, *p²*, mounted in usual manner, as, for instance, upon the arms, *p³*, fulcrumed at *p⁴*, upon the wheel and having their outer ends controlled by springs, *p⁵*, tending to draw said weights and arms normally towards the axis of rotation of the wheel.

The free, spring controlled ends of the weighted arms, *p³*, are connected by links, *p⁶*, with the radial arms, *p⁷*, of a sleeve, *p¹⁰*, loosely mounted upon the cam shaft, *e²³*. This sleeve at its outer end, at the left, Fig. 3, carries an insulating head, *p¹¹*, in which, see Fig. 4, is set a contact piece, *p¹²*, the face of which is flush with the peripheral face of the said head. Thus, the sleeve, *p¹⁰*, carrying this contact member, *p¹²*, not only rotates by and with the cam shaft wheel, *p'*, but it

has a further movement relative to the said wheel produced by the varying positions of the centrifugal governor weights, p^4, due to the speed of rotation of said wheel, which causes the said contact member, p^{12}, to occupy a more or less advanced position or lead relative to its wheel, according to the rotative speed of the latter.

Back of the insulating head, p^{11}, and preferably rotatably carried by the inclosing case, p^3, referred to, is a plate, p^{13} upon which are mounted and insulated therefrom four contact posts, p^{14}, (one for each cylinder of the engine, a four cylinder engine being herein assumed) shown as spaced uniformly 90 degrees one from the other and carrying respectively the four contact brushes, p^{15}, resting at their ends upon the periphery of the insulating head, p^{11}, referred to, and adapted on rotation of the said head to successively make contact with the rotating contact member, p^{12}, on the said head. Thus, at each complete rotation of the cam shaft wheel, and the head, p^{11}, there occur four successive closures of the electric circuits, said closures being for the four cylinders of the engine, to ignite the contents thereof at the proper times for operating the engine in the manner hereinbefore described.

As the speed of the engine increases, it is necessary to advance the sparking for the several cylinders, since increased speed of rotation requires earlier ignition. This is accomplished with the construction shown, for as the speed increases, the governor weights assume positions further from their axes of rotation, thus turning the sleeve, p^{10}, to advance the position of the contact member, p^{12}, to cause it to make earlier contact with the several brushes within which it rotates.

I control the supply of mixture for the engine also from this governor: Referring to Fig. 3, the pivot pins in the outer ends of the radial arms, p^9, and to which the links, p^8, are jointed, which pins are here designated p^{15x}, are shown as extended through the wheel, p', the arms of which are suitably shaped, to provide sufficient openings therefor, said pins at their remote ends passing through and closely fitting suitable openings in a circumferentially grooved disk, p^{16}, loosely mounted upon the hub of the cam shaft driving wheel, p', so that rocking movement of the radial arms, p^9, due to the action of the governor weights, will cause a corresponding rocking or rotative movement of the said disk, p^{16}, also on and relative to the said shaft, e^{2b}.

The hub of the disk, p^{16}, is grooved spirally at p^{17}, to receive a pin, p^{18}, projecting radially from the hub of the wheel, p', so that as the said grooved disk is rocked or rotated back and forth under the action of the governor weights, the spiral groove in the hub thereof acting upon the radial pin, p^{18}, will cause the said grooved disk to move axially in one or the other direction, according to the direction of its rotation, and consequently, corresponding to the movements of the governor weights. The groove in the periphery of this disk, see Fig. 5, receives the end of a lever, p^{19}, fulcrumed at p^{20}, in the casting, p^3, and bearing at its free end upon a spring, p^{21}, seated against a collar, p^{22}, fast on a rod, p^{23}. This rod is jointed at p^{24}, to an arm, p^{25}, which is fast upon the upper end of a spindle or stem, n^6, of any suitable throttle, which controls the supply of combustible mixture to the engine; consequently, as the said grooved wheel is shifted axially by the shifting governor weights, it will through the lever, spring and rod referred to, impart a corresponding rocking movement to the throttle, to increase or reduce the supply of mixture to the engine cylinders, and the spring, p^{26}, engaging the said arm, p^{25}, returns the latter upon return movement of the governor weights. Thus, the governor weights not only adjust the times of ignition, as required to maintain the speed at the proper point, but regulate also the supply of mixture to the engine cylinders for the same purpose. The centrifugal governor may therefore be relied upon to maintain a substantially constant speed, which speed may be varied as desired by proper adjustment of the weights and their connections. In operating the vehicle, however, it becomes necessary frequently to reduce the speed of the vehicle below that normally maintained by the automatic governor, and it is equally desirable, when occasion requires, to be able to increase the speed beyond that normally maintained by the governor. To provide for this I have connected with the cylindrical throttle arm, p^{25}, a rod, p^{27}, shown as leading to and connected with an arm, p^{28}, at the bottom of a rod, p^{29}, mounted in bearings preferably upon and at the side of the steering post, p^{30}, said rod, p^{29}, being fitted at its upper end with a handle, p^{31}, conveniently arranged with reference to the steering handle, p^{32}. Thus the operator, with one or the other of his hands, while steering the vehicle, may move the said handle, p^{31}, in one direction, as to the left, Fig. 5, and thus rotate the cylindrical throttle farther than it is rotated by the automatic governor and reduce the supply of mixture for the engine beyond that determined by the automatic governor and reduce the speed below the normal governor speed to any desired extent. On the other hand, by swinging said handle in an opposite direction, the throttle may be turned, to increase the supply of mixture to the engine to increase its speed, notwithstanding the automatic governor is tending to hold it down, the spring, p^{21}, between the rod p^{23},

and the arm, p^{19}, permitting the said rod to be moved in opposition to the said arm without disturbing the position of the latter as fixed by the governor. In any event, whether the speed be thus increased or reduced relative to the normal governor speed of the engine, the governor responds to the change in speed, and immediately adjusts the lead of the contact member, p^{12}, to meet the new speed. As heretofore stated, however, a governor or speed responsive device which is sensitive and accurate when running at high speeds, is not usually sensitive or accurate at very low speeds approaching a state of rest; and I have found that while the governor shown is capable of responding quickly to changes in running speed and keeping the lead of the sparking contact p^{12} always at a proper point for the particular speed for the time being, yet when the machine is stopped and the parts assume a state of rest, said governor does not with certainty restore the said contact, p^{12}, to the required position to cause ignition at the very beginning of the working strokes of the several cylinders. As a rule, a governor of this type when stopped will leave the said contact p^{12} in position where, if the engine be started, it would cause premature ignition, *i. e.*, ignition near the close of the return stroke next preceding a working stroke; which, of course, would prove detrimental. To overcome this objection, referring to Fig. 4, I have attached to or upon the brush carrying plate, p^{13}, a flexible connection or wire, 50, which is carried to and about a suitable pulley or sheave, 51, thence upward to and connected with a handle lever, 52, fulcrumed at 53, upon a suitable support, preferably on the dash board. The said lever may be provided as herein shown with a suitable latch device, 54, coöperating with a toothed sector, 55, by which said lever is held in desired position.

A spring, 56, attached to a suitable support is connected with the plate, p^{13}, said spring tending to rotate the said plate normally in a direction indicated by the arrow, Fig. 4, to advance the brushes, p^{15}, and thereby the time of sparking; such rotation of the said plate and brushes being resisted by the wire and lever, 52.

Assuming the engine to have stopped with its movable contact, p^{12}, in the position shown in Fig. 4, and with the brushes in the full line positions in the said figure, such position of said contact, p^{12}, relative to the cranks and pistons of the engines being such as would furnish the proper sparking for the engine when running at normal or slightly reduced speed, obviously would be too early for the initial starting of the engine. It is impossible to give to the said contact, p^{12}, a retrograde movement because of its connections with the governor weights, which are in a state of rest; consequently the lever, 52, is dropped into its dotted position, Fig. 4, thereby permitting the spring, 56, to rotate the plate, p^{13}, in the direction of the arrow to advance the brushes relative to the rotatable contact, p^{12}, which is equivalent to giving a retrograde movement to the said contact to delay the ignition for the several cylinders. The parts are so adjusted that when the said handle lever, 52, is dropped into its lowermost position, the adjustment of the brushes will be correct for starting the engine, that is, for producing the ignition at the commencement of the working stroke of each piston. The engine having been started, after it has acquired such speed that the governor commences to respond, the handle lever, 52, is again raised into elevated position, thus restoring the brush carrying plate, p^{13}, to its normal position against the tension of the spring, 56, and leaving the control of the sparking of the engine thereafter wholly in the governor, which exercises its control by varying the lead of the rotating contact, p^{12}. By this arrangement, I am enabled to construct the governor and its connections with the movable contact in a manner that will produce the best results and most accurate and sensitive adjustment of the contacts for running speeds of the engine, thus enabling me to derive the greatest benefit from the throttling of the mixture herein described. At the same time, the hand adjustment of the ignition contacts provides for the starting of the engine, without danger of its reversing to the injury of the one attempting to start it.

My invention obviously is not limited to the particular embodiment thereof here shown and described, as the same may be varied within the spirit and scope of the invention.

Claim.

1. In a motor vehicle provided with an internal combustion engine having sparking means, the combination with said engine and ignition contacts therefor, of speed responsive means to govern the relative operation of said contacts, and simultaneously operable means independent of the speed responsive means to govern the relative operation of said contacts for starting, while maintaining a like cycle of engine operation.

2. In a motor vehicle the combination of an internal combustion engine provided with sparking means, means for throttling the combustible mixture therefor, ignition contact devices, a speed governor and connections for adjusting the ignition to follow the throttled speed of the engine, and simultaneously operable means separate from said governor and its connections, to adjust the ignition for starting the engine.

3. In a motor vehicle provided with an in-

ternal combustion engine, the combination with throttling means therefor of a throttle controller responsive to the speed variations of the engine, means to throttle the engine independently of the speed thereof, sparking means having a timing adjustment responsive also to the same speed variations of the engine, and means under the control of the operator also to vary the timing of said sparking means for starting the engines irrespective of the engine speed.

4. In a motor vehicle provided with an internal combustion engine employing sparking means, the combination with said engine of independently and simultaneously operable governor and manually controlled sparking means therefor to effect independent adjustments of the time of ignition relatively to the working stroke while maintaining the same cycle of engine operation.

5. In a motor vehicle provided with an internal combustion engine employing sparking means, the combination with said engine, of circuit closing and breaking means including a rotary contact and one or more coöperating contact brushes, of governor means comprising a governor and its connections with said circuit closing and breaking means to change the relative angular position of said contact and said brushes, and means independent of said governor mean to vary the position of said contact brush or brushes for starting the engine.

6. In a motor vehicle provided with an internal combustion engine, a throttling device therefor, controlling means for said throttling device responsive to variations in the engine speed, means for controlling said throttling device irrespective of the speed responsive means, sparking means having a timing adjustment responsive also to the same speed variations of the engine, and means also to adjust the timing of said sparking means during engine operation independently of said speed controlled means and said throttle controlling means.

7. In a motor vehicle provided with an internal combustion engine, a throttling device therefor, means responsive to variations in the engine speed for controlling said throttling device, manual operating means for controlling said throttle, sparking means for said engine having a timing adjustment responsive also to the same speed variations of the engine, and manually operative means for adjusting the timing of said sparking means during engine operation independently of said manually operated throttle controlling means.

8. An internal combustion engine having throttling means therefor, a controlling device for said throttling means responsive to the speed variations of the engine, means also to control said throttling means irrespective of the speed responsive means, sparking devices having a timing adjustment to cause changes in the ignition to respond to speed changes in the engine, and additional controlling means also to adjust the timing of said sparking means during engine operation.

9. In a motor vehicle provided with an internal combustion engine, the combination with said engine of ignition means therefor, means responsive to the engine speed to vary the timing of ignition relatively to the working stroke, and separate controlling means also to vary the time of ignition relatively to the working stroke on the same cycle of operation independently of the engine speed.

10. In a motor vehicle provided with an internal combustion engine employing sparking means, the combination with said engine of ignition contacts therefor, means responsive to engine speed to adjust the sparking in advance of the working stroke for relatively high speeds, and separate controlling means to adjust said contacts independently of said speed responsive means to provide retarded ignition at or about the beginning of the working stroke for starting or on relatively slow speeds.

11. In a motor vehicle an internal combustion engine, ignition contacts for said engine, a speed governor controlling said contacts to adjust the timing of the engine ignition to correspond with the engine speed, an engine throttle also controlled by said governor, a controlling lever within the control of the vehicle operator, and connecting means between said lever and said ignition contacts permitting the manual adjustment of said contacts independently of the engine speed or the throttle control.

12. In a device of the class described, the combination with an internal combustion engine provided with fuel throttling means and ignition contacts, of speed governor means for controlling said contacts and said throttling means, and means independent thereof for separately governing the relative operation of said contacts for starting and independent of the action of said governor thereon.

13. In a device of the class described, an internal combustion engine provided with sparking means, fuel throttling means for said engine, means including a speed responsive governor for adjusting the ignition to follow the speed of said engine, simultaneously operable means to adjust the ignition for starting the engine independently of said governor adjustment, and means for limiting the action of said governor on said throttling means.

14. A motor vehicle provided with an internal combustion engine having a fuel throttling device and sparking means, the combination therewith of an independently and simultaneously operable governor and

manually controlled sparking means therefor, manually controlled contact devices for said sparking means to effect independent adjustments of said throttling device and time of ignition relative to the engine speed w' ile maintaining the same cycle of engine operation, and means for limiting the action of said governor on one of them.

In testimony whereof, I have signed my name to this specification, in the presence of two subscribing witnesses.

ANDREW L. RIKER.

Witnesses:
WM. S. TEEL, JR.,
JAMES ROCHE, JR.

G. W. WACKER.

MAGNETO.

APPLICATION FILED DEC. 23, 1915.

1,224,247. Patented May 1, 1917.

Fig. 1.

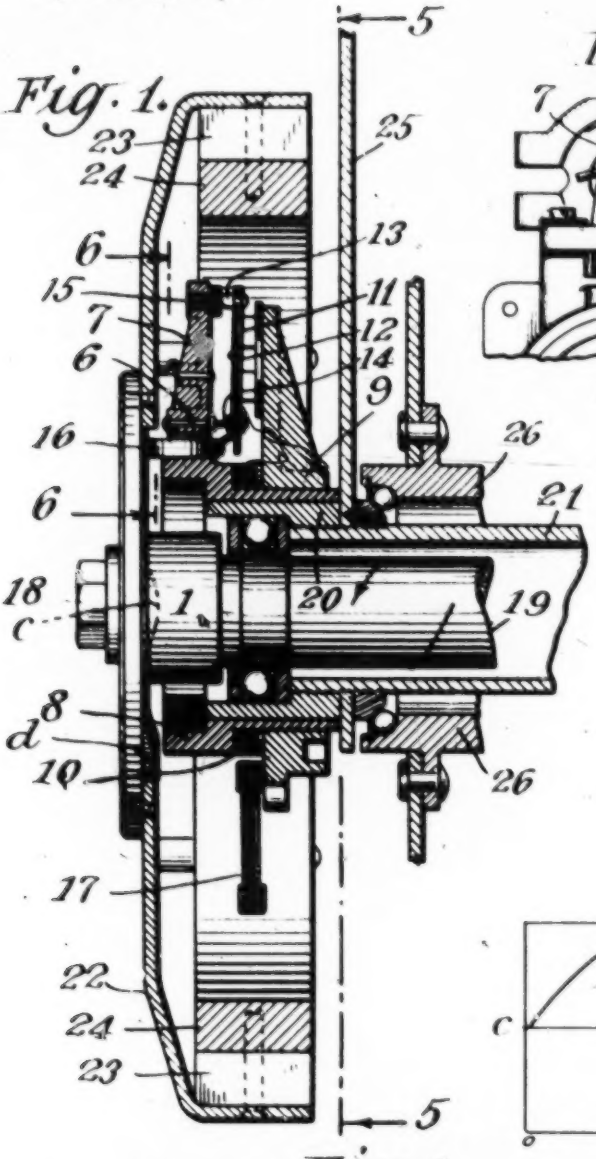

Fig. 6.

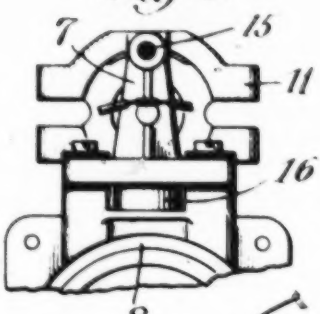

Fig. 2.

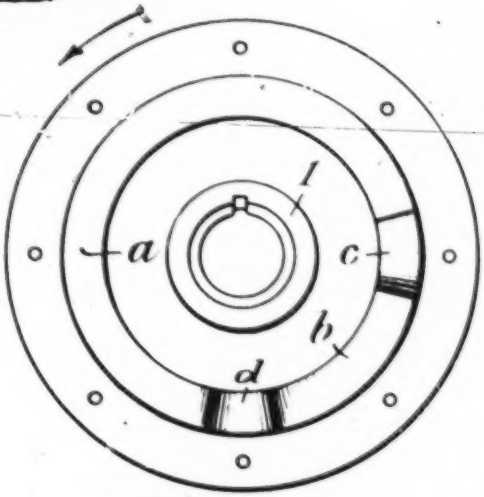

Fig. 3.

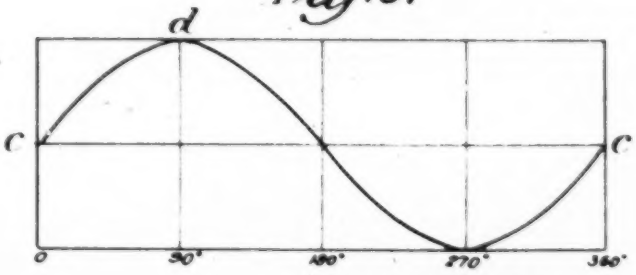

Fig. 4.

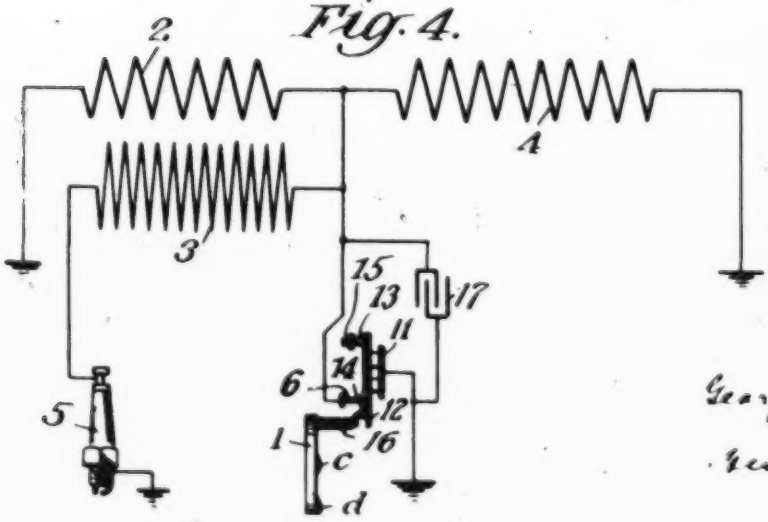

Fig. 5.

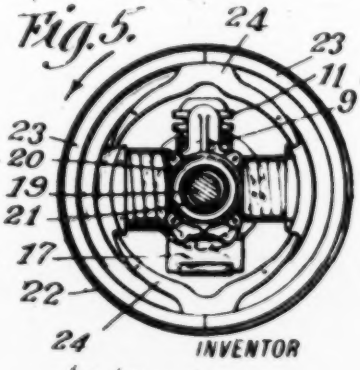

INVENTOR

George W. Wacker

BY

Henry D. W. Williams

ATTORNEY

UNITED STATES PATENT OFFICE.

GEORGE W. WACKER, OF RUTHERFORD, NEW JERSEY, ASSIGNOR TO AUTO-PED COMPANY OF AMERICA, A CORPORATION OF DELAWARE.

MAGNETO.

1,224,247. Specification of Letters Patent. Patented May 1, 1917.

Application filed December 23, 1915. Serial No. 68,446.

To all whom it may concern:

Be it known that I, GEORGE W. WACKER, a citizen of the United States, residing at Rutherford, in the county of Bergen and State of New Jersey, have invented certain new and useful Improvements in Magnetos, of which the following is a specification, reference being had therein to the accompanying drawings forming part thereof.

My invention relates to magnetos such as are employed for ignition purposes in connection with the internal combustion engines of self-propelled vehicles. My invention relates more particularly to the means for periodically making and breaking the short circuit of a short circuited primary coil. Other features of construction embodied in the same magneto which embodies my present invention and in part illustrated in the accompanying drawings form the subject of th.. other applications for patent filed by me on even date herewith, of which application Serial Number 68,443 relates more particularly to the armature construction, application Serial Number 68,444 to the construction of the interrupter or circuit breaker, and application Serial Number 68,445 to means for making electrical connection of the high tension coil to an outside conductor.

In regard to my present invention it is first to be noted that heretofore magnetos have been operated in two different ways as to the control of the circuits. According to one way, known as the open circuit system, the circuit of the short circuited primary coil is maintained normally open, being thus open during the greater part of a complete rotation and being closed only long enough to produce sufficient current flow to result in a spark from the spark coil when the closed circuit of the primary coil is broken, the circuit-controlling or circuit-making and circuit-breaking devices being constructed to operate in this way. According to the other way of operation, known as the closed circuit system, the short circuit of the primary coil is kept closed at all times excepting when broken substantially at periods or points of maximum current flow in order to produce an ignition current in the secondary coil or spark coil. In both systems of operation commonly the circuit is closed automatically by a spring and is opened or broken by means of a raised cam face or cam projection at the desired points of relative rotation of the relatively rotating parts of the magneto, for example, of its armature and its field magnet.

The normally open circuit system operates well electrically but there are mechanical difficulties and objections. For example, the extended raised cam surface, which is employed for both breaking the circuit and for maintaining it in the open condition, by reason of its pressure upon the spring-pressed cam roller or corresponding part results in excessive wear of such cam roller and the parts with which it coöperates. The construction of circuit-controlling means employed in the closed circuit system is substantially free from these mechanical defects but electrical difficulties are present. For example, particularly at high speed, what perhaps may not inaptly be termed the residue of current from a preceding electrical impulse seems to have a tendency to persist and to partially overlap upon the next succeeding current impulse in the opposite direction which it is desired to utilize for producing the next succeeding spark, with the result that an effective spark-producing current impulse will not be produced. However, whatever the explanation may be, this above electrical disturbance of the magneto circuits exists and must be reckoned with. In cases where the short circuit of the primary coil is broken at each succeeding period or time of substantially maximum current flow, for producing a spark at each such period of maximum current, the above mentioned objectionable electrical disturbance is not present. However, when a magneto is employed for producing a lesser number of sparks than that of which it is capable as determined by the successive peaks or rises of alternating current impulses, then the objectionable overlapping and interfering effects of any unused current pulsation or impulse of which the circuit has not been broken, is marked. For example, when a bipolar magneto, this being the common form, is employed for ignition purposes in connection with an internal combustion engine having only a single cylinder and the magneto is driven or rotated at engine speed, such, for example, as by reason of having its rotative parts mounted upon and rotative with the crank shaft of the engine, then in such an instance two opposite cur-

rent impulses or current peaks, will be produced at each rotation of the rotative parts of the magneto and of the engine shaft, and each of these current impulses is capable of producing a spark, but only one of these pulsating current impulses is required for effecting the desired ignition in the cylinder of the engine. In such a case, in operating with a circuit-controlling construction for producing an ignition spark under the normally closed circuit system, it has been found that the unused current impulse seriously interferes with the production of an effective ignition spark at the single time at which the circuit is broken.

It is an important object of my present invention to provide a construction operating on the normally closed circuit principle or system which will be substantially free from the above mentioned electrical difficulties and objections. I have discovered that if the short circuit of the primary coil or energizing coil be broken at a point of comparatively low and non-spark-producing current and in advance of the point at which the succeeding or following spark-producing current impulse has its circuit broken for producing a spark, that such next or following spark-producing current impulse will be stronger and will result in the production of an effective ignition spark. This improved result, so far as I am able to ascertain, apparently is due to the dissipation of left over or residual current and likewise of the residual magnetism, by reason of which the circuits are cleared and are enabled to start anew without interference to build up a strong spark-producing current impulse. I have found this advantageous result to be particularly marked in the case of a bipolar magneto such as above mentioned in which only one of the two alternating current impulses is employed for spark-producing purposes. Other more particular objects and advantages of my invention will hereinafter appear.

My invention includes circuit-controlling means adapted or so constructed as to clear the magneto circuit of objectionable electrical and magnetic effects or influences in advance of the production of a spark-producing electrical impulse in such circuit. My invention more particularly includes features of construction and combinations of parts as will appear from the following description.

I shall now describe the ignition magneto embodying the circuit-controlling means of my invention illustrated in the accompanying drawings and shall thereafter point out my invention in claims.

Figure 1 is a central vertical axial section of a complete magneto embodying my invention, some of the parts appearing in elevation.

Fig. 2 is a side or face elevation as viewed from the right in Fig. 1 of the field magnet hub having formed thereon a circuit-controlling cam.

Fig. 3 is a diagram illustrating the successive alternating current impulses and the points relatively thereto at which the circuit of the primary coil is successively broken.

Fig. 4 is a diagram of the circuits of the magneto.

Fig. 5 is a reduced vertical section on a plane indicated by the line 5—5 of Fig. 1 as viewed from the right and shows the complete magneto in side elevation.

Fig. 6 is a partial vertical section on a plane indicated by the line 6—6 of Fig. 1 as viewed from the left.

In carrying out my present invention a rotative field magnet support or hub 1 is provided upon its inner side with an annular circuit-controlling or circuit-making and circuit-breaking cam. This cam has an extended depressed cam face or surface *a* located in a single plane and which, in the construction shown, extends nearly three-quarters of the way around, which is to say, is nearly two hundred and seventy degrees in arcuate or circumferential length. The annular cam on the hub 1 is provided with another similar but shorter depressed cam surface *b* located in the same plane as the face *a* and which, in the construction shown, is almost ninety degrees or nearly one-fourth of the cam circumference in length. The depressed cam surfaces *a* and *b* are separated from each other at their adjacent ends by two similar rounded cam projections *c* and *d* which in the construction illustrated in the drawings are shown as spaced apart one-fourth of the circumference of the annular cam, being spaced ninety degrees apart from their middle or highest points, this spacing, of course, corresponding to a quarter rotation of the rotative magnet-carrying hub 1.

The magnet-carrying magneto hub 1 rotates in a counter-clockwise direction as seen in Figs. 2 and 5 and as viewed from the right in Fig. 1, so that the first cam projection *c* travels in a circular path ninety degrees or one-fourth of a rotation in advance of the second cam projection *d*. The first cam projection *c* is a circuit-clearing circuit-breaking cam projection and the second cam projection *d* is a spark-producing circuit-breaking cam projection. The timing is so arranged, as is particularly illustrated in Fig. 3 and as is there indicated by the letters *c* and *d*, that the first or circuit-clearing cam projection *c*, traveling ninety degrees in advance of the second or spark-producing cam projection *d*, will operate to break the circuit at a point midway between the peaks or points of maximum flow of the two oppo-

sitely flowing current impulses, or at a point where substantially no current is flowing. The second or spark-producing cam projection *d*, following ninety degrees behind the first or circuit-clearing cam projection *c*, will operate to break the circuit substantially at the maximum of the first current impulse after the breaking of the circuit by the advance cam projection *c*.

It is to be noted in this connection that each time the circuit is broken it will be immediately closed and that the spark-producing current impulse which is interrupted by the second cam projection *d* is produced during the time that the circuit is permitted to be closed by the shorter depressed cam surface *b*. After the spark-producing breaking of the circuit by the second cam projection *d* the circuit is permitted to remain closed throughout the travel of the extended depressed cam surface *a* during which time, as is illustrated in the diagram in Fig. 3, a second opposite current impulse is developed which rises to its maximum and then gradually subsides substantially up to the point where the circuit is again to be broken by the circuit-clearing advancing cam projection *c*.

The magneto illustrated in the drawings it is to be understood is bipolar, not only by reason of the diagrammatic indication in Fig. 3, but also as is shown in the other figures of the drawings illustrating the construction, particularly Fig. 5. In Figs. 1 and 5 the rotative position of the cam-carrying hub 1 relatively to the other parts of the magneto corresponds to that indicated by two hundred and seventy degrees in the diagram of Fig. 3, this being a maximum point of an unused alternating current impulse, the objectionable effects of which are dissipated by the advancing circuit-clearing cam projection *d*, such dissipation occurring at the indication O (or 360°) in Fig. 3 and, as will readily be understood, just prior to the building up or rise of current which is terminated by the second cam projection *d* which breaks the circuit at 90° for producing an ignition spark, as is also indicated in Fig. 3.

The other parts of the circuit-controlling mechanism which are coöperative with the annular cam having the cam surfaces *a*, *b*, *c*, and *d* formed on the rotative magnet-carrying hub 1, may be of any suitable construction, and these parts of the circuit-controller or circuit-breaker which are illustrated in the accompanying drawings, more particularly form the subject of my hereinbefore mentioned patent application Serial Number 68,444, and such parts are herein described together with other parts of the magneto only to a sufficient extent for the understanding of my present invention. Also the circuit arrangement or combination of coils diagrammatically illustrated in Fig. 4 of the drawings as included in the magneto which embodies my present invention is more particularly set forth and claimed in my hereinbefore mentioned patent application Serial Number 68,443. In this construction primary and secondary coils, respectively, 2 and 3 are provided which correspond respectively with the usual primary and secondary coils commonly employed in magneto construction, and there is also provided a separate additional reinforcing coil 4 for the primary coil 2, the reinforcing coil 4 being so arranged and connected as to act in harmony with and reinforce the inductive effect of the primary coil 2. In the wiring diagram illustrated in Fig. 4 the primary coil 2 and the secondary high tension or spark-producing coil 3 are shown as connected in multiple in a short circuit which is normally closed through the circuit controller or circuit breaker, and the supplemental reinforcing coil 4 is shown as connected in a short circuit through the circuit breaker in multiple relation with the primary coil 2 and the secondary coil 3, but when the circuit breaker or circuit controller is excluded, as when the circuit is broken, then the reinforcing coil 4 will be connected in series with the primary coil 2 and will also be in series with the secondary high tension coil 3, but the primary coil 2 and the secondary coil 3 will be in multiple relation with each other relatively to the reinforcing coil 4. The circuits are shown as of the grounded type, and one end of the winding of the high tension coil 3 is shown as connected to a usual spark plug 5.

The other parts of the circuit breaker which are coöperative with the circuit breaking cam of the hub 1 will now be described. In the construction illustrated one end of the winding of each of the three coils 2, 3 and 4 is electrically connected to a stationary contact terminal or contact point 6, shown as a stud, which is carried by a connector piece or contact post 7 which is mounted upon but insulated from the other parts of an armature frame, as most clearly appears in Fig. 6 of the drawings. The contact post 7 is mounted upon and insulated from a main frame part or armature hub 8 over a reduced portion of which fits a second frame part or collar plate 9 which clamps in place a laminated armature core 10.

The collar plate 9 has an upward projection or extension, as appears in Fig. 1, and a sheet metal circuit-closing or contact-making push spring 11 is mounted upon this frame extension. The sheet metal circuit-closing or contact-making spring 11 carries a contact-breaking lever bar 12 which is shown as secured at its upper end to the

spring 11 by means of a fulcrum pin 13 and as similarly secured near its lower end by means of a short stud 14 which forms a movable contact terminal or contact point coöperative with the stationary contact point or contact stud 6. The fulcrum pin 13 at the upper end of the lever bar 12 rests upon and is adapted to rock upon a fulcrum heel or bearing 15 of insulating material, such as hard rubber, shown as supported by the connector piece or contact post 7

Normally or when unrestrained the circuit-closing spring 11 will press the movable contact stud 14 into circuit-making engagement with the adjacent end of the stationary contact stud 6, as appears in Fig. 1 of the drawings, and the short circuit of the magneto coil will thereby be closed through the armature frame which forms a grounded connection, as indicated in Fig. 4. The lower projecting end of the circuit-breaking lever bar 12 is shown as off-set away from the circuit-closing spring 11 and this projecting offset end of the lever bar 12 is coöperative with a cam roller 16 of suitable insulating material, such as hard fiber.

The cam roller 16 is shown as loosely contained in a slot in the armature frame shown, as appears in Figs. 1 and 6, as formed between the base of the contact post 7 and the adjacent face of the armature hub 8. It is to be noted as appears in Fig. 1, that the cam roller 16 projects from its containing slot at both sides of the contact post 7 and of the adjacent part of the armature hub 8. At one side the cam roller 16 is engageable with the adjacent projecting end of the lever bar 12 and at the other side the cam roller 16 is adapted to be engaged by the hereinbefore described annular cam formed upon the rotative field magnet hub 1. The smooth depressed cam surfaces *a* and *b*, which are in the same plane, as hereinbefore noted, do not press upon the projecting cam roller 16 but preferably permit the cam roller to have a certain amount of play and looseness, thereby permitting the circuit-closing spring 11 to maintain the closed circuit condition. However, the rounded cam projections *c* and *d* successively strike against or engage the cam roller 16 and force it back in its containing slot, thereby imparting circuit-breaking movement to the lever bar 12 against the tension of the circuit-closing spring 11. These cam projections *c* and *d* only break the circuit momentarily, permitting it to be immediately again closed by the circuit-closing spring 11.

As hereinbefore described, the first or circuit-clearing cam projection *c* rids the circuit of disturbing currents and leaves it free for the production of the succeeding spark-producing current impulse, the circuit of which is broken by the second or spark-producing cam projection *d* at the proper point of current flow to produce the most effective spark, as hereinbefore described. Because of the fact that the circuit-breaking cam roller 16 is loose within its containing slot at all times excepting when momentarily engaged by these cam projections *c* and *d* the wear upon this cam roller and upon the adjacent end of the lever bar 12 and upon other coöperative parts is very slight and is much less than it would be were the circuit maintained in a normally open condition by an extended projecting cam surface such as has hereinbefore commonly been the practice. Also in this connection it is to be noted that the advance breaking of the circuit at a non-sparking point by the circuit-clearing cam projection *c* produces improved electrical effectiveness comparable to that produced by a construction providing for operation under the normally open circuit system.

It is to be noted and is to be understood that the circuit-breaking cam projections *c* and *d* do not necessarily need to be relatively located exactly at the positions shown in the drawings. The first or circuit-clearing cam projection *c* could be shifted circumferentially somewhat relatively to the spark-producing cam projection *d* and good results still be secured. However, the circuit-clearing cam projection *c* should be so located as to avoid the production of a spark as that would be objectionable, in that it would unnecessarily deteriorate the spark plug 5 and also might sometimes effect pre-ignition. The best results so far have been secured by the location of the first or circuit-clearing cam projection *c* and the second or spark-producing cam projection *d* ninety degrees or one-fourth of a rotation apart, as illustrated in the drawings. It is to be understood of course, that the rotative cam-carrying hub 1 must be properly timed with relation to the magneto armature, which, in the construction illustrated in the drawings, is stationary. A condenser 17 is shown as connected across the contact terminals 6 and 14 of the circuit-breaker in the usual way as is well understood in the art.

In the magneto construction embodying my invention illustrated in the drawings, the cam-carrying hub 1 is also the hub of the fly wheel of the engine and is shown as removably held, by means of a tap bolt 18, upon the outer end of the engine crank shaft 19. This outer end of the crank shaft 19 is shown as journaled, by means of ball bearings, in a bearing ring or collar 20 which is screw-threaded over the adjacent outer end of a stationary sleeve 21. The armature hub 8 is fixed upon the stationary collar 20 so that the magneto armature is stationary while the field is rotative, being carried by the fly wheel hub 1. In the construction of magneto illustrated in the

drawings, a combined fly wheel shell and magnet carrier 22, preferably of non-magnetic material, such as brass, is fixed upon the cam-carrying hub 1 and has a peripheral flange or rim, as appears in the drawings. The field magnet of the magneto is shown as comprising two semi-circular permanent magnets 23 which have their like poles in contact and which fit within the peripheral flange or rim of the fly wheel shell 22 and are carried thereby. These semi-circular magnets 23 are provided at their joined ends with curved oppositely arranged polar extensions or poleshoes 24, as most clearly appears in Fig. 5.

It will now be readily understood that the magnets 23 and their pole shoes 24 provide two opposite magnet poles and also that the straight or bar-like armature core 10 is similarly bipolar. In this construction, as will be clear from an inspection of the drawings, particularly Fig. 5, there will be two alternating current impulses for each rotation of the rotative field, and one of these current impulses will have its maximum strength substantially in the relative position of the rotative parts appearing in Fig. 5 of the drawings, and this maximum current impulse is that which is indicated in Fig. 3 as occurring at 270° of rotation, this being the unused current impulse whose after effects are dissipated by the advancing circuit-clearing cam projection *c* at a point ninety degrees in advance of the breaking of the circuit at substantially the point of maximum current strength of the next succeeding current impulse by the following spark-producing cam projection *d* which, as hereinbefore noted, breaks the circuit at the point indicated in Fig. 3 at 90°.

In the construction illustrated in the drawings a plate-like stationary frame part 25 of the self-propelled vehicle is shown as held in place on the stationary sleeve 21 by the stationary armature-carrying bearing collar or ring 20. Also a ground wheel of the vehicle has a hub 26 shown as journaled upon the sleeve 21.

It is obvious that various modifications may be made in the construction illustrated in the drawings and above particularly described within the principle and scope of my invention.

I claim:

1. A magneto having, in combination, a short circuited primary coil, a secondary spark coil in inductive relation with the primary coil, means for producing alternating current in the short circuit of the primary coil, and means for breaking such short circuit at a non-sparking time in relation to the current therein and also for subsequently breaking such short circuit at a spark-producing time in relation to such current.

2. A magneto having, in combination, an armature including a short circuited primary coil and a secondary coil, a field magnet, the field magnet and the armature being mounted for relative rotation, and means operated by the relative rotation of the field and armature for successively breaking such short circuit at non-sparking and at spark-producing points in such rotation.

3. A magneto having, in combination, two relatively rotary parts, a short circuited primary coil, a secondary spark coil in inductive relation with the primary coil, and means operated by such relative rotation for successively breaking such short circuit at a non-sparking and at a spark-producing point in such rotation.

4. A magneto, having, in combination, two relatively rotary parts, a short circuited primary coil, a secondary spark coil in inductive relation with the primary coil, and means operated by such relative rotation for successively breaking such short circuit at a non-sparking point preceding a spark-producing point and again at the next succeeding spark-producing point.

5. A magneto having, in combination, two relatively rotary parts, a short circuited primary coil, a secondary spark coil in inductive relation with the primary coil, and means operated by such relative rotation for breaking such short circuit successively substantially at points of minimum and of maximum current flow.

6. A magneto having, in combination, an automatically acting circuit-closing circuit closer, and circuit-breaking means for operating the circuit closer to break the circuit, such means including a cam for thus operating the circuit closer to break the circuit at a time of substantially maximum flow of current for producing a spark and at a preceding time of less flow of current for clearing the circuit.

7. A magneto, having in combination, a spring-pressed circuit closer, and circuit-breaking means coöperative with such circuit closer, such means including a cam having a spark-producing circuit-breaking cam projection and also having a circuit-clearing circuit-breaking cam projection.

8. A magneto having, in combination, a primary coil included in a normally closed circuit, a secondary spark-producing coil in inductive relation with the primary coil, and means for alternately breaking the circuit of the primary coil at a point to clear the circuit and at another point to produce a spark at *successive alternate breakings* of the circuit.

9. A bipolar magneto having, in combination, a primary coil included in a normally closed circuit, a secondary spark-producing coil in inductive relation with the primary coil, spark-producing circuit-break-

ing means operative to break the circuit of the primary coil at a bipolar point substantially when the flow of current is greatest, and circuit-clearing circuit-breaking means operative to break the same circuit after the subsidence of maximum current flow in the opposite direction corresponding to the other bipolar point.

10. A magneto having, in combination, a primary coil included in a normally closed circuit, a secondary spark-producing coil in inductive relation with the primary coil, spark-producing circuit-breaking means operative to break the circuit of the primary coil at alternate points of substantially maximum current flow, and circuit clearing circuit-breaking means operative to break the same circuit at other alternate points after the subsidence of maximum current flow.

In testimony whereof I have affixed my signature.

GEORGE W. WACKER.

J. G. HEASLET.

SPARK CONTROL IN COMBUSTION ENGINES.

APPLICATION FILED AUG. 13, 1915.

1,239,689.

Patented Sept. 11, 1917.

4 SHEETS—SHEET 1.

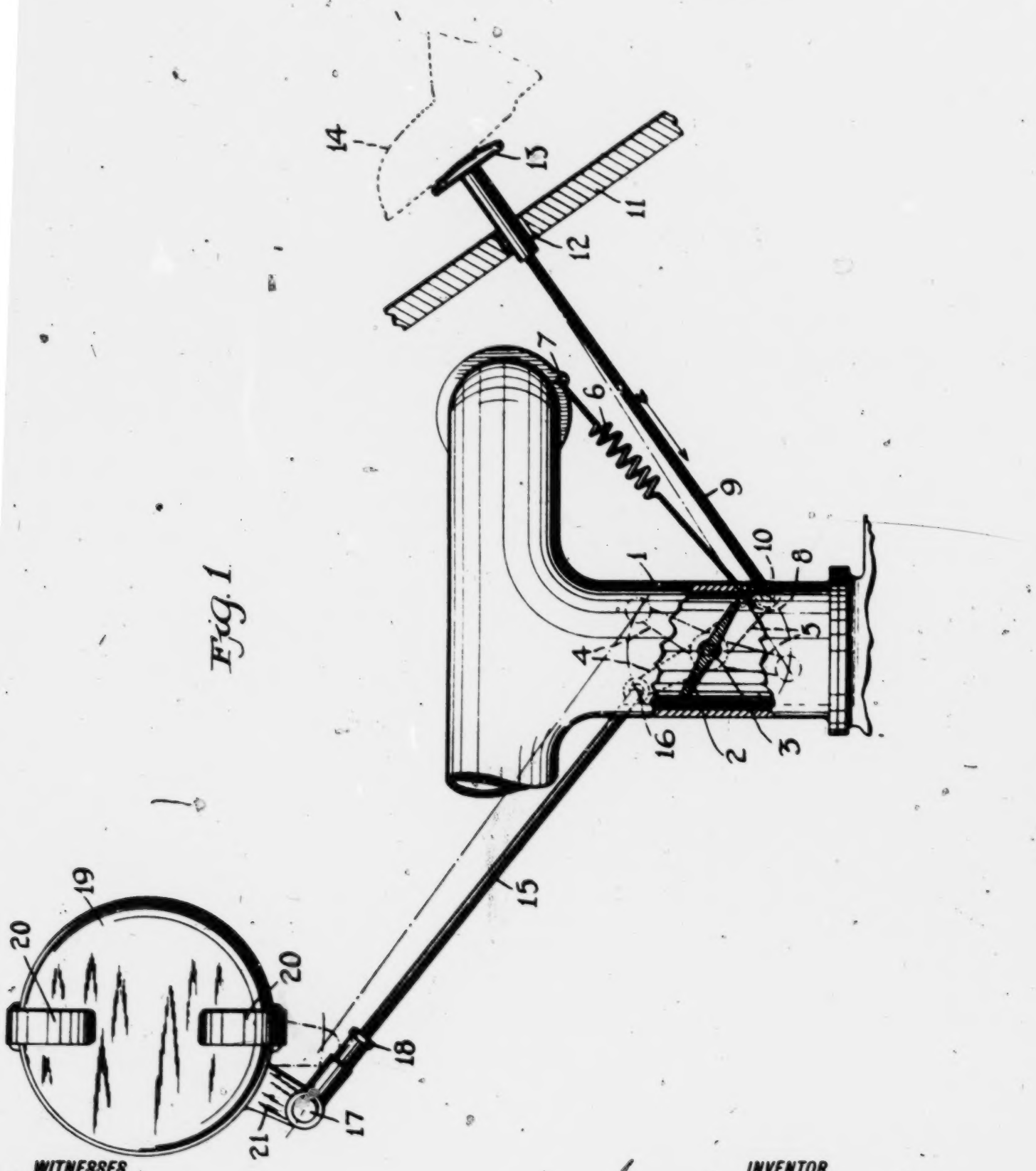

Fig. 1

WITNESSES

Geo. A. Lemon

Margaret Vogel

INVENTOR

James G. Heaslet

BY

Howard & Howard

ATTORNEY

J. G. HEASLET.

SPARK CONTROL IN COMBUSTION ENGINES.

APPLICATION FILED AUG. 13, 1915.

1,239,689.

Patented Sept. 11, 1917.

4 SHEETS—SHEET 2.

Fig 2.

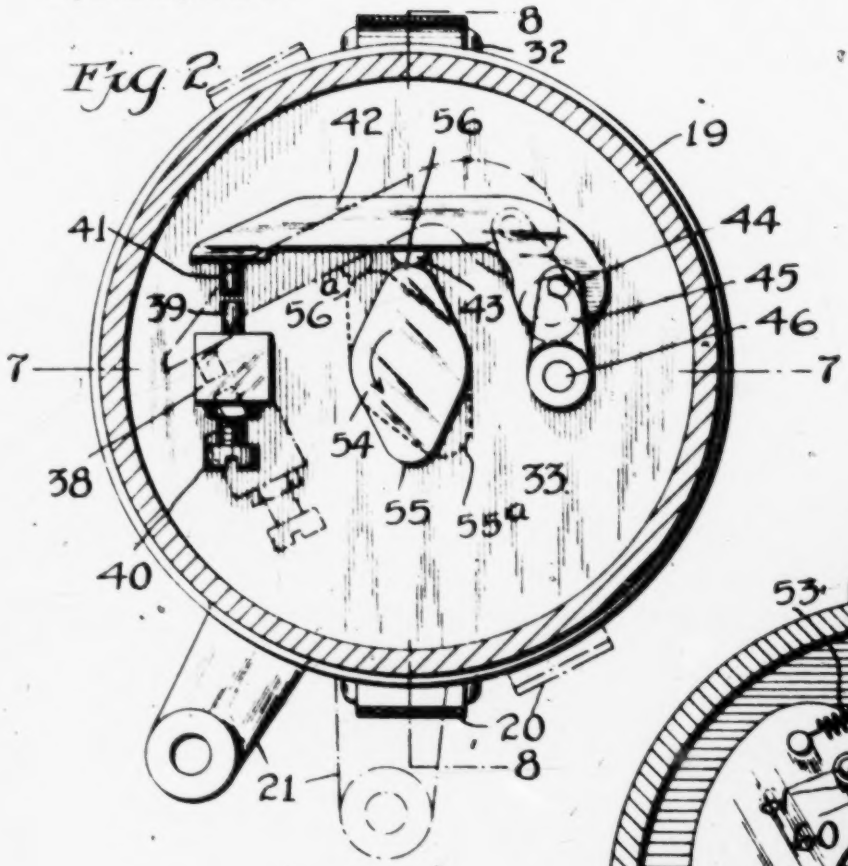

Fig 3.

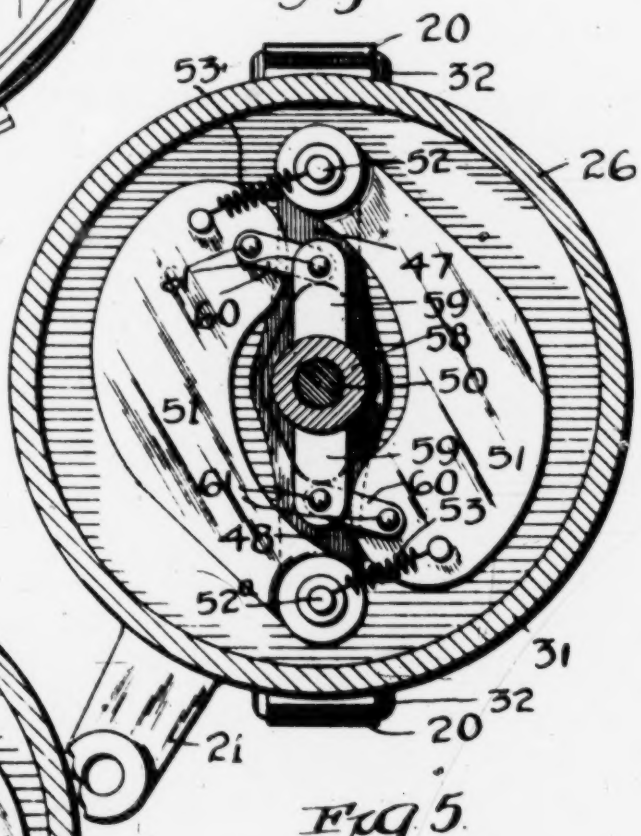

Fig 4.

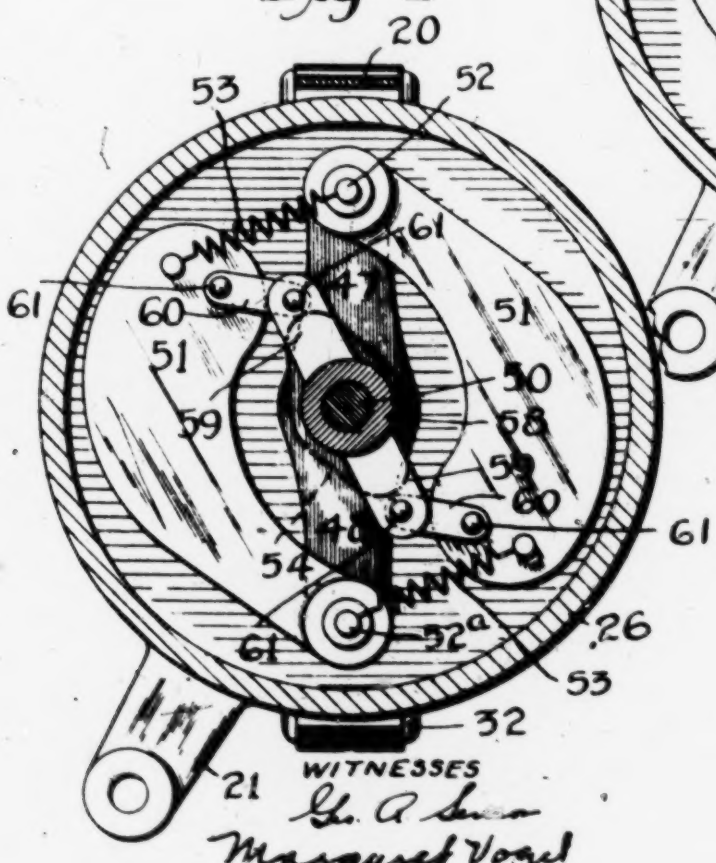

Fig 5.

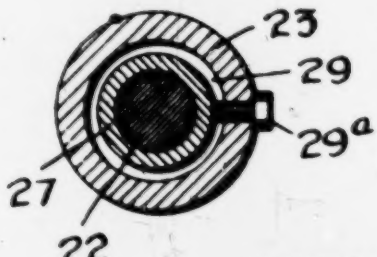

WITNESSES

Geo. A. Lemon

Margaret Vogel

INVENTOR

James G. Heaslet

BY

Dennis & Parry

ATTORNEY

J. G. HEASLET.

SPARK CONTROL IN COMBUSTION ENGINES.

APPLICATION FILED AUG. 13, 1915.

1,239,689.

Patented Sept. 11, 1917.

4 SHEETS—SHEET 3.

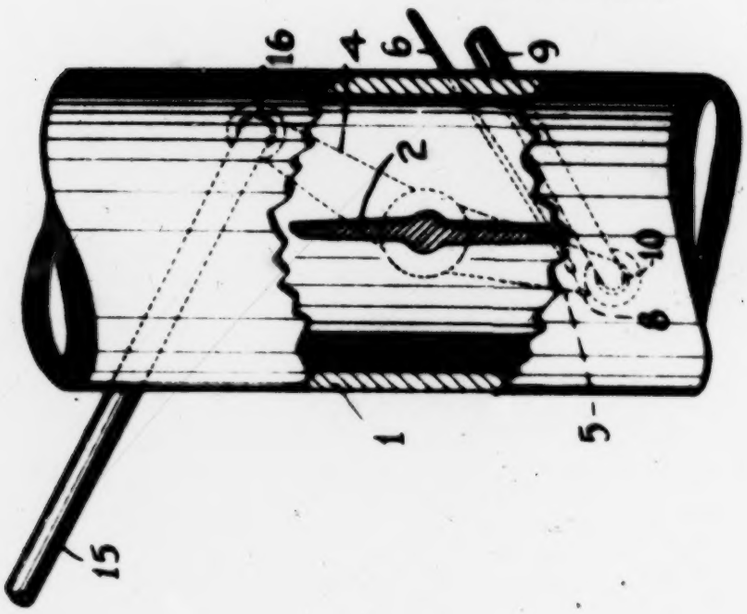

Fig. 6.

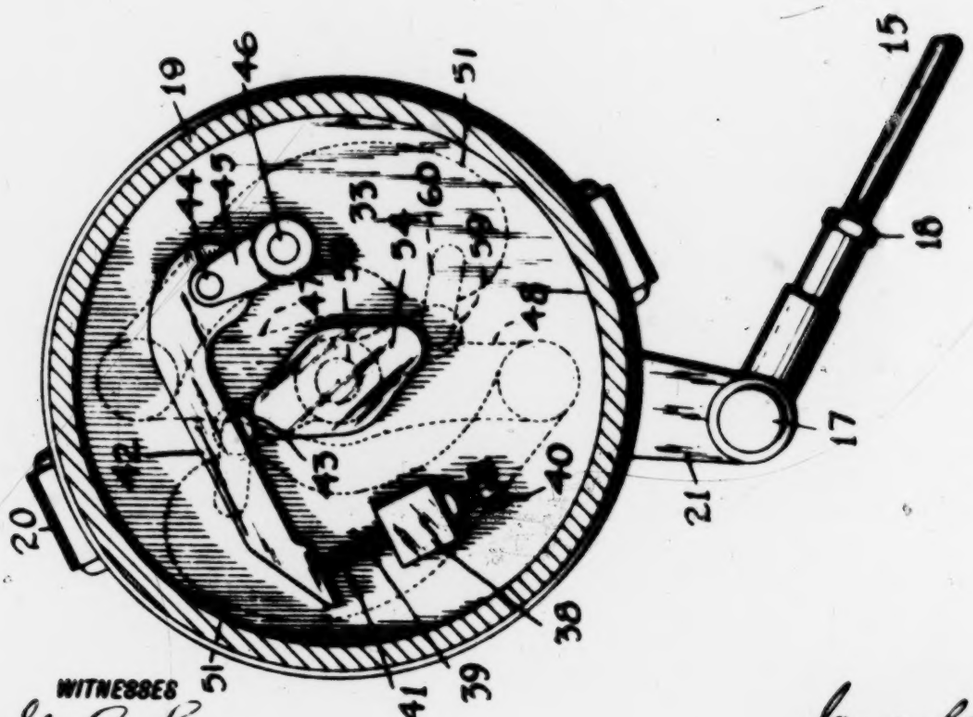

WITNESSES

Geo. A. Lemon

Margaret Vogel

INVENTOR

James G. Heaslet

BY

Howard Berry

ATTORNEY

J. G. HEASLET.

SPARK CONTROL IN COMBUSTION ENGINES.

APPLICATION FILED AUG. 13, 1915.

1,239,689.

Patented Sept. 11, 1917.

4 SHEETS—SHEET 4.

Fig. 8

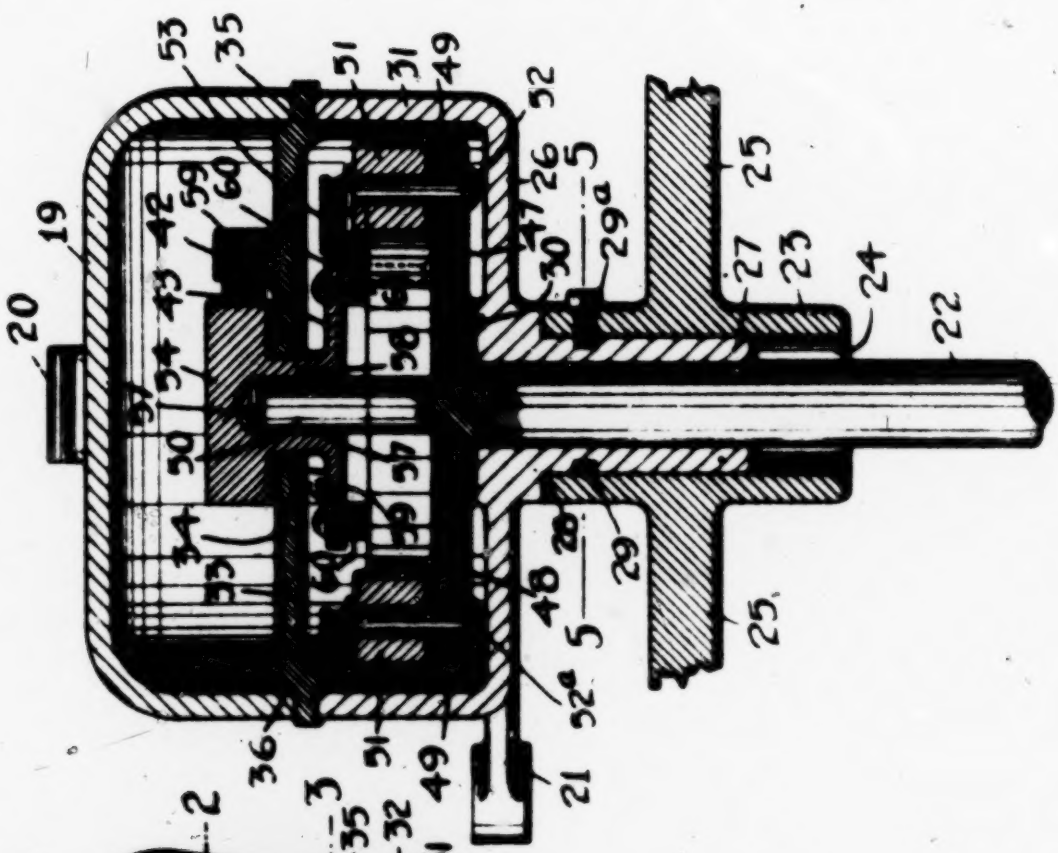

Fig. 7

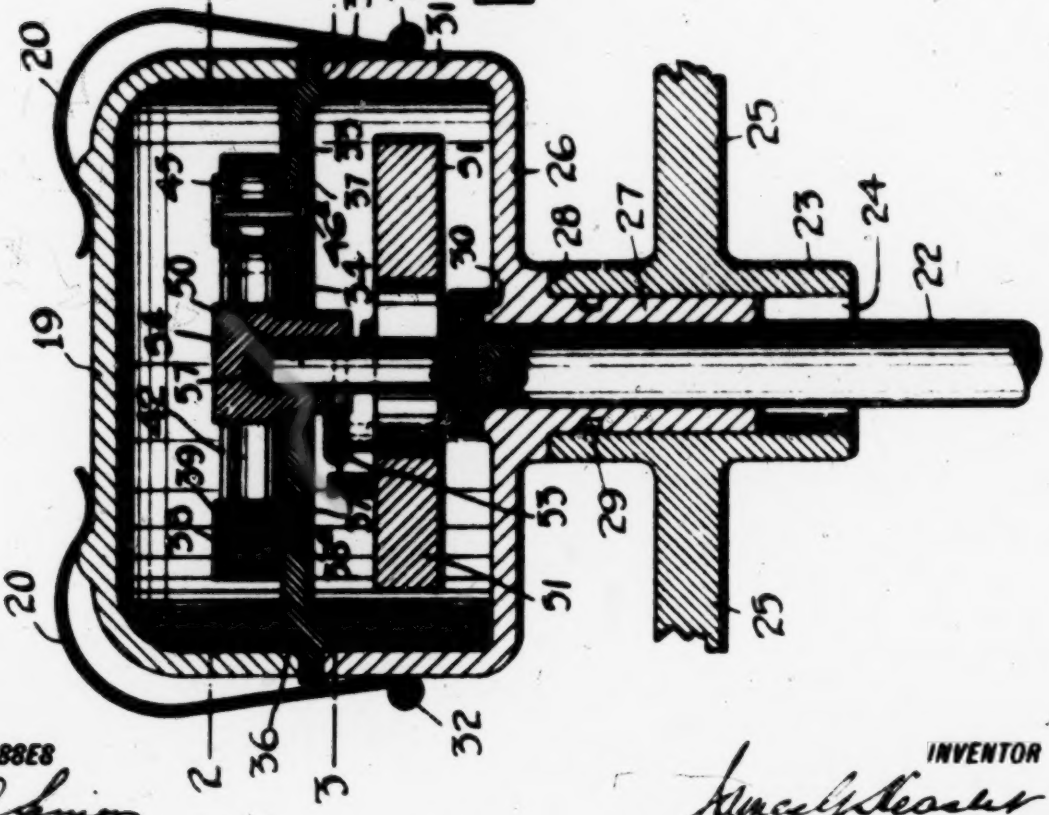

WITNESSES

Geo. A. Lemon

Margaret Vogt

INVENTOR

J. G. Heaslet

Richards Perry

ATTORNEY

UNITED STATES PATENT OFFICE.

JAMES G. HEASLET, OF DETROIT, MICHIGAN, ASSIGNOR TO THE STUDEBAKER CORPORATION, A CORPORATION OF NEW JERSEY.

SPARK CONTROL IN COMBUSTION-ENGINES.

1,239,689. Specification of Letters Patent. Patented Sept. 11, 1917.

Application filed August 13, 1915. Serial No. 45,290.

To all whom it may concern:

Be it known that I, JAMES G. HEASLET, a citizen of the United States of America, and resident of Detroit, in the county of Wayne and State of Michigan, have invented certain new and useful Improvements in Spark Controls in Combustion-Engines, of which the following is a specification.

This invention relates to an improvement in means for controlling the throttle and spark-producing means in the operation of internal combustion engines.

In the operation of such engines, it is desirable, under certain conditions of load and speed and fuel supply to advance the spark so as to cause an explosion of gas in anticipation of the completion of the piston stroke. This is accomplished manually, usually by the hand or foot of the operator, resulting in the displacement of what is known as the "timer" from a zero position where the spark is generated at or adjacent to the full thrust of the piston, to a position where its contact with the controller operates to produce the spark at a point before the piston completes its stroke. The same result is also accomplished by automatic means, dependent upon the speed at which the motor is rotating, such apparatus being adjusted to advance the spark in proportion to the increase of motor speed.

Such spark-controlling devices are usually adjusted and operated most efficiently under conditions where a limited volume of gas and air sufficient for normal road conditions is supplied to the motor. I have observed, however, that when a greater volume is supplied to the motor than the limited volume above referred to, to meet abnormal road conditions and where the spark is still advanced, the resultant phenomena is a pounding of the engine, due to conditions which are well understood in the operation of such motors. Such pounding can, however, be avoided by retarding the spark in anticipation of, or at the time, that a greater volume of gas is supplied to the motor, but, in order to accomplish such retardation of the spark with the increase of gas volume, it is necessary (or it has heretofore been necessary) to change the adjustment of the spark-controlling means, be the same manual or automatic, such change necessitating the readjustment of the spark-control when the volume of gas supplied is again restored to the normal minimum volume.

The object of my invention is to provide means, operating in unison with throttle mechanism, whereby the spark controlling mechanism will be subject to throttle control mechanism, when and after the throttle is opened to supply combustible fluid to the motor in excess of a predetermined volume, without however disturbing the setting or adjustment of either manual or automatic spark controlling means employed when a less volume than that referred to is admitted to the motor. My object being to retard the spark when an abnormal volume of gas is supplied to the motor to meet conditions of engine load, and to restore the spark to its setting under manual, or adjustment under automatic spark control, w'-n the volume of gas supply is again reduced to a normal and predetermined volume.

I accomplish these results as follows:— Sparking mechanisms comprise two elements, a timer and a spark controller, mounted in such relation that the timer engages the spark controller in the course of its revolution, thus causing the breaking of the circuit and the resultant spark. The timer is adjustably mounted to turn on its axis, and the manual or automatic control above referred to comprises the moving of the timer on such axis and, by so doing, determining the point in the arc of its rotation at which it will engage the controller. Heretofore the controller has been mounted in a stationary position. In the present embodiment of my improvement I mount the controller so that it may be rotated for purposes of adjustment in the same arc as that in which the timer moves, to the end that I may adjust the position of the timer in its relation to the controller, or the position of the controller in its relation to the timer. In the embodiment of my invention here disclosed, I show the timer under automatic control, regulated according to the speed of engine rotation. On the other hand, I place the controller under the control of means operating either by or in unison with the throttle control. It will be obvious,

therefore, that it is possible for me, under this construction, to neutralize the operation of either one of these controls by moving the other control in a direction to meet and compensate for the movement of the other member oppositely controlled, without interfering with or changing the adjustment of such control, that is to say, when the timer is advanced to a certain position by the manual or automatic control, and there maintained under predetermined conditions of speed and under conditions when a certain volume of gas is supplied to the motor (it matters not whether such control is mounted to operate either the timer or the circuit controller), it is obvious that if I move the other member in the arc of its movement, in the same direction and to the same extent as the timer has been previously moved, it will neutralize the effect of the movement of the timer and restore the point of their engagement to a zero position and thus retard the spark, the zero position in such case being understood to be the point at which the spark is caused to operate when the piston is at or adjacent to the limit of its thrust.

In the present embodiment of my invention is shown one means by which the results above referred to may be accomplished. I do not, however, intend to limit my claims to the present embodiment, for it will be apparent that other and different means may be employed to accomplish the neutralizing effect above described, provided such means operate to automatically retard the spark at, and after, a predetermined volume of gas is supplied to the motor, such means operating under the control, or operating in unison with the throttle, to cut out or automatically neutralize the effect of the normal spark-controlling means without changing the adjustment of such means.

I have illustrated my invention in the accompanying drawings, wherein Figure 1 is a diagrammatic view, partly in elevation and partly in section, showing a throttle and means to control the same, together with an elevation in plan view, of the device employed by me to accomplish the results above referred to. Fig. 2 is a plan view of the devices shown in section in Fig. 7, the same being taken on the line 2–2, that is to say, with the hood or cap 19 removed. Fig. 3 is a plan view of the devices shown in Fig. 7 on the line through 3, the apparatus in this drawing being shown in a zero or normal position. Fig. 4 is a duplicate of Fig. 3, showing the device in an abnormal position, that is to say, with the arms distended by the operation of centrifugal force. Fig. 5 is a horizontal section of Fig. 8 taken on line 5 5. Fig. 6 is a view of Fig. 2 showing the timer advanced and the controller also advanced to meet the same. This view also shows the throttle fully open. Fig. 7 is a vertical section of Fig. 2 on the line 7 7 with the hood or cap 19 in place. Fig. 8 is a similar vertical section to that of Fig. 7, taken on the line 8 8 of Fig. 2.

1 is a tube through which combustible fluid is supplied to the motor. It contains a butterfly valve, 2, which is mounted on shaft 3, the latter being journaled in the walls of the tube 1. On the opposite side of said tube 1 and secured to the shaft 3, as indicated in dotted lines in Fig. 1, is a bell crank lever having two arms, 4 and 5. 6 is a helicon spring secured at one end, as at 7, to a stationary member, and at the other end to the arm 5 of said bell crank lever at point 8, its tension being directed to hold the valve 2 normally closed. 9 is a rod with one end pivotally connected to the arm 5, and at the other end passing through a hole, 12, in the floor, 11. 13 is a pushbutton and 14 is the illustration of a human foot bearing on the same. 15 is a rod pivotally connected at 16 with the arm 4 of the bell crank lever referred to, and at the other end pivotally connected at 17 with an arm 21, the operation of which will hereafter be described. 18 indicates a screw adjustment by which the throw of the arm 15, in its relation to the arm 21, may be determined and adjusted.

Referring to Figs. 7 and 8, 25 is a suitable support for a sleeve, 23, the latter having a central aperture at 24, and a bearing surface, 28, at the top thereof. 26 is a casing provided with a stem, 27, and a shoulder adapted to rest on the bearing surface 28, said stem being provided with annular groove 29. The stem 27 is keyed to revolve within the sleeve 23 by the screw 29^a. Casing 26 has the bearing surface 30 and annular walls 31.

22 is the shaft mounted to be rotated in unison with motor revolution. It is adapted to be mounted within the stem 27, and is provided with a shoulder to rest on the bearing surface 30 of the casing 26. It is provided with the radial arms 47 and 48, and is further projected into the stem 50.

The springs 20 are attached to the walls of casings 26 at 32 and operate to hold cap 19 in position; interposed between the cap 19 and the walls 31 of the casing 26 is a partition or plate 33 having a central aperture 34 and screw holes 37, and an annular boss 35, to receive the walls 31 of the casing 26, and an annular boss 36 to receive the walls of the cap 19. 38^a and 46^a are screws adapted to secure the circuit controller in position on the plate 33.

Referring to Fig. 2, I there illustrate a timer and a circuit controller, the latter comprising the following elements: 38, is a post screwed to the plate 33 by the screw 38^a and carrying the electric contact point 39, which

is adjustable by set screw 40 in its relation with the electric contact point 41. 42 is an arm carrying the electric contact point 41, and also the physical contact point 43, which is adapted to engage either end of the timer 54. Arm 42 is pivoted at 44 to the link 45, which in turn is secured in a fixed position to the plate 33 by the screw 46.

Referring to Figs. 3, 4, 7 and 8, 47 and 48 are two arms, preferably integral with the shaft 22, and having their bearing on the surface 30 of the casing 26, the stem 50 rising intermediate said arms on the axis of the shaft 22. 51 and 51 are loaded levers pivotally connected to the arms 47 and 48 by the bolts 52 and 52 respectively. 53 and 53 are helical springs interposed between the ends of said levers and the bolts last referred to, having their tension directed to hold said weighted levers in the position shown in Fig. 3, whereas, under the exercise of centrifugal force they are thrown into the position shown on Fig. 4. 54, shown in full lines in the Fig. 2 is a timer, oval in form, the ends 55 and 56 mounted to engage the contact point 43 of the circuit controller. This timer is shown in dotted lines in Fig. 3, in its normal or zero position, and in dotted lines in Figs. 2 and 4 in its abnormal position, that is to say, when in its operation the spark is advanced. The timer 54 is internally bored, as at 57, such bore being adapted to receive the stem 50, and it is mounted within the aperture 34 in the plate 33. 58 I characterize as the neck of the timer, from which radiate two arms, 59—59. 60 and 60 are links interposed between the respective ends of the arms 59 and the weighted levers 51, such pivotal connection being accomplished by the bolts 61.

The operation of this device is as follows: Assuming that the automatic spark control, the operation of which will be presently described, is set to operate in conformity with a predetermined rate of motor revolution and under conditions where a predetermined volume of gas is supplied to the motor, these conditions satisfying the normal requirements of usage in the operation of automobiles, resulting in the satisfactory operation of the motor under normal conditions of load. (The operation of the device under abnormal conditions of load will be dealt with presently.) Under the normal conditions of load above referred to, the valve 2 is so adjusted that the movement of the valve by the pressure of the foot 14 on the button 13 will not operate to move the rod 15 until the valve is moved on its axis to points substantially as indicated in Fig. 1. In this position it will be noted that the valve is open and that a certain volume of gas, measured by the extent of such opening, is permitted to flow to the motor, this I characterize as a predetermined volume capable of being measured and regulated. The relation of such volume to the devices herein described is regulated according to the length of the stem 15 as controlled by the set screw 18. During the period that this predetermined volume of gas is flowing to the motor, the automatic control as herein described, or the manual control if such be employed, is undisturbed by the operation of mechanism presently to be described. Hence it may be said that during a period when a predetermined volume of gas is flowing into the motor, that is to say, a volume governed by the position of the valve 2, the motor is entirely in the control of the spark regulating means as at present employed and as well understood in the art. This operation is maintained during normal road conditions, as, for instance, where the machine is traveling over a level or approximately level road, thus presenting a uniform or approximately uniform load to the operation of the motor. Under these conditions, the spark may be, and usually is, advanced a predetermined degree, as the best results are obtained under such conditions.

The automatic spark control above described operates as follows: The shaft 22 is geared to operate in conformity with motor speed, and such operation causes the arms 47 and 48 to revolve about the axis of the shaft 22, of which they form a part. The weighted levers 51 and 51 are respectively pivoted at the ends of the arms 47 and 48 and bound thereto by the springs 53—53. The timer 54 is mounted on the stem 50 and its arms 59—59 are secured to the weighted levers by the links 60—60. Under normal conditions, when the engine is running slow, the elements last described are found in the position shown in Figs. 2 and 3. Under such conditions the timer 54 makes contact with the controller knob 43 at predetermined intervals in the course of its rotation, the adjustment being such as to produce a spark in the cylinder at a time when the piston is at or adjacent to its full thrust, this I characterize as the "zero position". However, as the speed of the rotation of the engine increases, the weighted levers 51, because of the power of centrifugal force exercised upon them, are distended against the tension of the spring 53 into or adjacent to the position shown in Fig. 4, thus operating to turn the timer 54 on its axis and bring the same, say, into the position shown in dotted lines in Figs. 2 and 4 and in full lines in Fig. 6. The operation of the timer under these conditions is to cause the spark to be produced in the cylinder in advance of the piston accomplishing

its full stroke, such relation being generally characterized as an "advance spark". The device just described is one of many forms of automatic spark control. The manual controller consists of any means operated manually to turn the timer 54 in like manner at the will of the operator.

Under the conditions which I have described, it is intended that the automatic control just described shall operate during the period that the throttle is in a position to deliver to the engine a predetermined volume of gas, as, for instance under conditions similar to those which I have graphically illustrated in Fig. 1, where the valve is shown partly open.

Suppose, now, an abnormal load is opposed to the operation of the engine, such, for instance, as an unusual grade, a sandy road or the like. Under these conditions, it is desirable, and in many cases necessary, to supply the engine with a greater volume of gas. As previously stated, if this greater supply of gas is fed to the engine while the spark is materially advanced, the engine begins to pound, due to well known phenomena not necessary here to enumerate, thereby losing efficiency and endangering the life of the motor. It is necessary, therefore, to immediately retard the spark, this can be done under conditions of manual control by turning the timer to zero, and, under conditions of automatic control, by slowing down the speed of the motor. Both of these operations are objectionable, for the reason that in the case of the manual control when the supply of gas again becomes normal, it becomes necessary to go through the operation of readjusting the spark to normal conditions, which requires skill and attention. Where automatic control is employed, it is undesirable, and sometimes impracticable, to slow down for the purpose of meeting the conditions described. Therefore, it becomes of the first importance to find means by which the spark may be retarded without interfering with such adjustments. I will now describe the manner in which I accomplish this result: Further pressure on the button 13 causes the valve to open to supply a volume of gas in excess of that supplied under normal conditions, and, as the valve 2 is opened by the pressure of the foot, the bell crank lever 4 is moved in the arc of the circle indicated in dotted lines in Fig. 1 and operates to move the rod 15 in the direction of the movement of the bell crank lever 4, and, in so doing, moves the arm 24 carrying with it the casing 26, which is mounted on the stem 27 to revolve in the sleeve 23, carrying with it plate 33 and the circuit controlling mechanism represented by the contact point 43 and electric contact points 39 and 41, all of which, as heretofore stated, are mounted on plate 33. This change of position is indicated in dotted lines in Fig. 2 and full lines in Fig. 6, where it will appear that, notwithstanding the fact that the timer 54 has been moved into a position to advance the spark, as shown in dotted lines Figs. 2 and 4, the fact that contact point 43 and its accompanying members have been moved in the arc of their mounting in the same direction (as shown in dotted lines Fig. 2 and full lines Fig. 6), operates to bring the point of engagement between them to the zero position from whence they started, and hence operates to neutralize the effect of the movement of the timer 54, thus retarding the spark during the period that the valve 2 is opened to admit a volume of gas in excess of that predetermined volume under which the automatic control is adjusted to operate, *i. e.* under normal conditions. When, however, the pressure of the foot is relieved from button 13 sufficiently to permit the valve 2 to be restored to its normal position in the power of the spring 6, casing 26, carrying the controller and the contact point 43 is again restored to its normal position, thus again advancing the spark to the position which it occupied prior to the opening of the throttle for the purpose of supplying an abnormal volume of gas.

Hence it will be apparent that the objects that I have in view, as heretofore stated, are accomplished by interposing a secondary spark control operating in unison with throttle control and adapted to neutralize the effect of a primary throttle control when a predetermined volume of gas is supplied to the motor, such volume being in excess of the volume employed during the operation of the primary spark controlling means.

What I claim is:

1. In an internal combustion engine, a throttle, and sparking mechanism, in combination with means operable by the throttle, only after the latter is opened beyond a predetermined extent, to control the sparking mechanism.

2. In an internal combustion engine, a throttle, and sparking mechanism, in combination with means operable by the throttle, only after the latter is opened beyond a predetermined extent, to retard the spark as the throttle is further opened and to subsequently advance the spark as the throttle is returned to the position of said predetermined extent of opening.

3. In an internal combustion engine, a throttle, and sparking mechanism, in combination with means operable by the opening and closing of the throttle for shifting the sparking mechanism to advance or retard the spark, said means being operable to control the sparking mechanism when the throttle is opened in excess of that necessary to supply a predetermined amount of gas to the motor, any operation of the throttle to

admit less than said predetermined amount of gas having no effect upon the sparking mechanism.

4. In an internal combustion engine, a throttle, and sparking mechanism, in combination with controlling means operated by the opening and closing of the throttle for controlling the sparking mechanism, said means being operable to control the sparking mechanism when the throttle is opened in excess of a predetermined maximum, under which maximum the operations of the throttle do not control the sparking mechanism.

5. In an internal combustion engine, a throttle, and sparking means, in combination with means, independent of the throttle, to control said sparking means during a period when the gas supply is limited by said throttle to a predetermined volume, with additional means to control said sparking means, the latter operating only when the gas supply exceeds the predetermined volume referred to as the limiting field of operation of the first-mentioned controlling means, the operation of said second controlling means being progressively to retard the spark as the volume of gas increases without interference with any manual or automatic adjustment of the first-mentioned spark controlling means.

6. In an internal combustion engine, a throttle, and sparking means, in combination with manually operable means for simultaneously regulating both the throttle and the sparking means, said manual means being operable to regulate the throttle within a predetermined zone without effecting regulation of the sparking means.

7. In an internal combustion engine, a throttle, and sparking means, in combination with manually operable means for simultaneously regulating both the throttle and the sparking means, said manual means being operable to regulate the throttle within a predetermined zone without effecting regulation of the sparking means, and means for automatically returning the throttle and sparking means to their initial conditions after being operated upon by said manual means.

8. In an internal combustion engine, a throttle, and sparking means, in combination with manually operable means for separately controlling the throttle during a preliminary travel of the throttle, said manual means being also operable, upon a further throw of the throttle thereby, to simultaneously control the sparking means.

9. In an internal combustion engine, a throttle, and sparking means, in combination with manually operable means for separately controlling the throttle during a preliminary travel of the throttle, said means being also operable, upon a further throw of the throttle thereby, to simultaneously operate the sparking means to retard the spark.

10. In an internal combustion engine, a throttle, and sparking means, in combination with manually operable means for separately controlling the throttle during a preliminary travel of the throttle, said means being also operable, upon a further throw of the throttle thereby, to simultaneously operate the sparking means to retard the spark, and means for automatically returning the throttle to its normal position and simultaneously advancing the spark to its initial condition subsequently to the operation of the manually operable means.

11. In an internal combustion engine, a throttle, and sparking means, the latter embodying two coöperating mechanisms, one of which embodies an electric circuit make and break device, and the other of which embodies means for periodically actuating said make and break device, in combination with means operated by the opening and closing of the throttle for shifting one of said mechanisms relative to the other to advance or retard the spark synchronously with any change of adjustment of the throttle beyond a predetermined maximum opening.

12. In an internal combustion engine, a throttle, and sparking means, the latter embodying two coöperating mechanisms, one of which includes an electric circuit make and break device, and the other of which embodies means for periodically actuating said make and break device, in combination with means for shifting the actuating means relative to the make and break device for advancing the spark, and means for subsequently shifting the make and break device relative to the actuating means to bring them into such relative positions as to retard the spark to normal.

13. In an internal combustion engine, a throttle, and sparking means, the latter embodying two coöperating mechanisms, one of which includes an electric circuit make and break device, and the other of which embodies means for periodically actuating said make and break device, in combination with means for automatically shifting the actuating means relative to the make and break device for advancing the spark, and means, operable by the movement of the throttle, for shifting the make and break device relative to the actuating means to bring them into such relative positions as to retard the spark to normal.

14. In an internal combustion engine, a throttle, and sparking means, the latter embodying two coöperating mechanisms, one of which includes an electric circuit make and break device, and the other of which embodies means for periodically actuating said make and break device, in combination

MICRO CARD
TRADE MARK ®

MATTHEW BENDER & COMPANY
MB
5.7

CD 3510

with means for shifting the actuating means relative to the make and break device for advancing the spark, and means, operable upon the opening of the throttle beyond a predetermined point, for shifting the make and break device to the position which it initially occupied relative to its actuating means, for the purpose of retarding the spark to the same extent as said spark was advanced by the movement of the actuating means relative to the make and break device.

15. In an internal combustion engine, a throttle, and sparking means, the latter embodying two coöperating mechanisms, one of which includes an electric circuit make and break device, and the other of which embodies means for periodically actuating said make and break device, in combination with means for shifting the actuating means relative to the make and break device for advancing the spark to a predetermined degree, during which operation the throttle may be opened to a predetermined maximum, at will, without having any effect upon the adjustment of the parts, and means operable upon the further opening of the throttle to shift the make and break device, relative to its actuating means, to the position which it initially occupied relative to its actuating means, for the purpose of retarding the spark to the same extent as said spark was advanced by the movement of the actuating means relative to the make and break device.

16. In an internal combustion engine, a throttle, and sparking means, in combination with manually operable means for simultaneously regulating both the throttle and the sparking means, said manually operable means being adapted to be operated at will up to a predetermined maximum degree of opening of the throttle, without effecting regulation of the sparking means, but adapted to retard the sparking means synchronously with the opening of the throttle beyond such predetermined maximum, and means, operating independently of the throttle, for automatically regulating the sparking means at such times as the throttle opening is equal to, or less than, the predetermined maximum opening referred to.

17. In an internal combustion engine, a throttle, and a sparking device comprising two coöperating mechanisms, one of which is rotatable in timed relation with the motor and adapted to actuate the other, which is normally stationary, for the purpose of periodically producing a spark, means for adjusting the position of the rotatable mechanism with reference to the normally stationary mechanism to advance the spark, and means for also advancing the normally stationary mechanism to the same extent as the rotatable mechanism is advanced to compensate for or neutralize the movement of the rotatable mechanism.

18. In an internal combustion engine, a throttle, and a sparking device comprising two coöperating mechanisms, one of which is rotatable in timed relation with the motor and adapted to actuate the other, which is normally stationary, for the purpose of periodically producing a spark, means for adjusting the position of the rotatable mechanism with reference to the normally stationary mechanism to advance the spark, and means for also advancing the normally stationary mechanism to the same extent as the rotatable mechanism is advanced to compensate for or neutralize the movement of the rotatable mechanism, said means for advancing the normally stationary mechanism being dependent for its operation upon the opening of the throttle beyond a predetermined maximum.

19. In a device of the class described, a shaft driven in synchronism with the power shaft of an internal combustion engine, a trip coöperating with said power shaft and rotatable therewith, normally stationary mechanism mounted adjacent the trip and operated thereby to periodically make and break the ignition circuit, means for varying the position of the trip relative to the piston stroke of the engine to advance the spark as the speed of the engine increases, and means for shifting the normally stationary mechanism to retard the spark.

20. In a device of the class described, a shaft driven in synchronism with the power shaft of an internal combustion engine, a trip coöperating with said power shaft and rotatable therewith, normally stationary mechanism mounted adjacent the trip and operated thereby to periodically make and break the ignition circuit, means for varying the position of the trip relative to the piston stroke of the engine to advance the spark as the speed of the engine increases, and means, operable by the throttle, for shifting the normally stationary mechanism to retard the spark.

21. In a device of the class described, a shaft driven in synchronism with the power shaft of an internal combustion engine, a trip coöperating with said power shaft and rotatable therewith, normally stationary mechanism mounted adjacent the trip and operated thereby to periodically make and break the ignition circuit, means for varying the position of the trip relative to the piston stroke of the engine to advance the spark as the speed of the engine increases, and means for shifting the normally stationary mechanism, said means being operable by the throttle to retard the spark when said throttle is opened in excess of a predetermined maximum.

22. In a device of the class described, a

shaft driven in synchronism with the power shaft of an internal combustion engine, a trip coöperating with said power shaft and rotatable therewith, normally stationary mechanism mounted adjacent the trip and operated thereby to periodically make and break the ignition circuit, means for varying the position of the trip relative to the piston stroke of the engine to advance the spark as the speed of the engine increases, and means for shifting the normally stationary mechanism, said means being operable by the throttle to retard the spark when said throttle is opened in excess of a predetermined maximum, any operation of the throttle, when the same is opened less than the predetermined maximum, having no effect on the spark control.

23. In an internal combustion engine, a throttle, and sparking means, the latter embodying two coöperating mechanisms, one of which includes an electric circuit make and break device, and the other of which embodies means for periodically actuating said make and break device, in combination with means for shifting the actuating means relative to the make and break device for advancing the spark, and means for subsequently shifting the make and break device relative to the actuating means to bring them into such relative positions as to retard the spark.

24. In an internal combustion engine, a throttle, and sparking means, the latter embodying two coöperating mechanisms, one of which includes an electric circuit make and break device, and the other of which embodies means for periodically actuating said make and break device, in combination with means for automatically shifting the actuating means relative to the make and break device for advancing the spark, and means, operable by the movement of the throttle, for shifting the make and break device relative to the actuating means to bring them into such relative positions as to retard the spark.

25. In a device of the class described, a shaft driven in synchronism with the power shaft of an internal combustion engine, a trip coöperating with said power shaft and rotatable therewith, normally stationary mechanism mounted adjacent the trip and operated thereby to periodically make and break the ignition circuit, means for varying the position of the trip relative to the piston stroke of the engine to advance the spark as the speed of the engine increases, manually controlled means for shifting the normally stationary mechanism to retard or advance the spark, and a throttle operable by said manually controlled means, said means being operable to open the throttle to a predetermined extent before shifting the normally stationary mechanism.

26. In a device of the class described, a shaft driven in synchronism with the power shaft of an internal combustion engine, a trip coöperating with said power shaft and rotatable therewith, normally stationary mechanism mounted adjacent the trip and operated thereby to periodically make and break the ignition circuit, means for varying the position of the trip relative to the piston stroke of the engine to advance the spark as the speed of the engine increases, manually controlled means for shifting the normally stationary mechanism to retard or advance the spark, a throttle operable by said manually controlled means, said means being operable to open the throttle to a predetermined extent before shifting the normally stationary mechanism, and means for automatically returning the stationary mechanism and manually controlled means to their normal conditions subsequently to the manual operation thereof.

27. In an internal combustion engine, a throttle, and sparking means embodying two elements, one of which is controlled by a governor, and the other of which is independent of the throttle up to the point of supplying a predetermined amount of gas to the engine, and controlled by the throttle only when said throttle is opened to supply an additional amount of gas to the engine.

28. In an internal combustion engine, a throttle, and sparking means embodying two coöperating mechanisms, one of which is controlled by the speed of the engine to automatically advance the spark with an increase in engine speed, and the other of which is controlled by the throttle after the throttle is opened beyond a predetermined maximum to neutralize the advance of the spark by the former mechanism, said throttle operating within the predetermined maximum independently of the sparking means.

29. In an internal combustion engine, a throttle, and sparking means embodying two mechanisms, one of which is controlled by a centrifugal governor to advance the spark with an advance in engine speed, and the other of which is controlled by the throttle only after said throttle is opened beyond a predetermined extent to neutralize the advance of the spark by the first mechanism.

Signed by inventor at Detroit, Michigan this 10th day of August 1915.

JAMES G. HEASLET.

Witnesses:
ROY C. GAMBLE,
D. G. MASTICK.

C. A. SAWTELLE.

GAS ENGINE.

APPLICATION FILED JAN. 5, 1914.

1,242,985.

Patented Oct. 16, 1917.

3 SHEETS-SHEET 1.

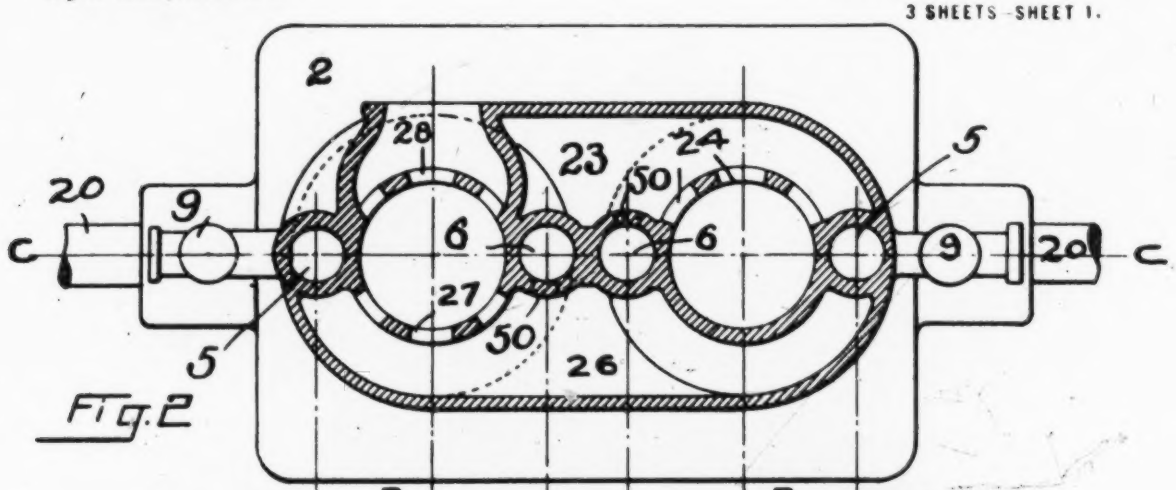

Fig. 2

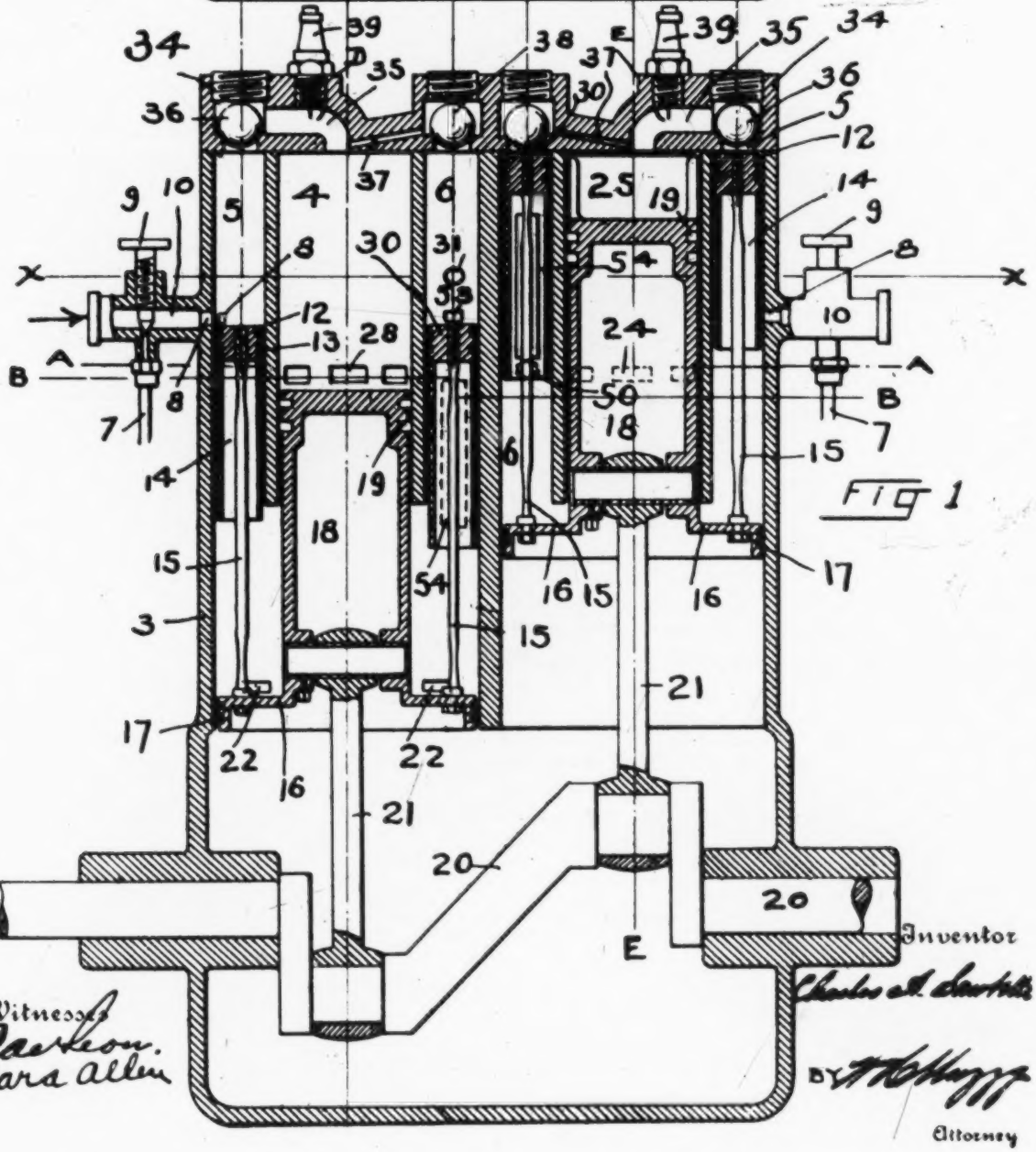

Fig 1

Witnesses:
Carleton.
Clara Allen.

Inventor
Charles A. Sawtelle

By [illegible]

Attorney

C. A. SAWTELLE.

GAS ENGINE.

APPLICATION FILED JAN. 5, 1914.

1,242,985.

Patented Oct. 16, 1917.

3 SHEETS—SHEET 2.

Fig. 3

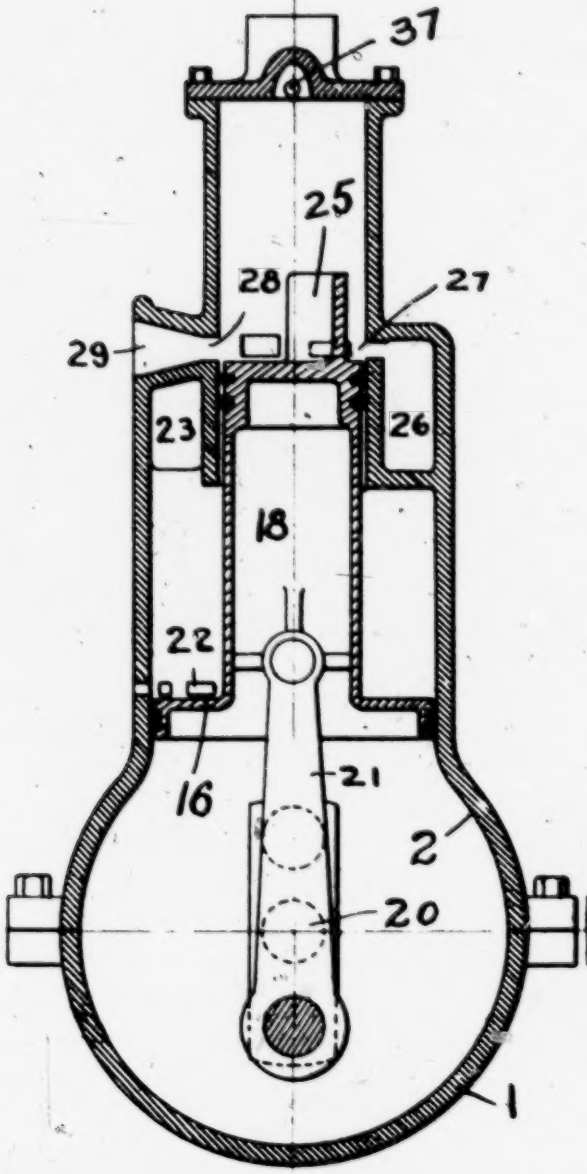

Fig. 4

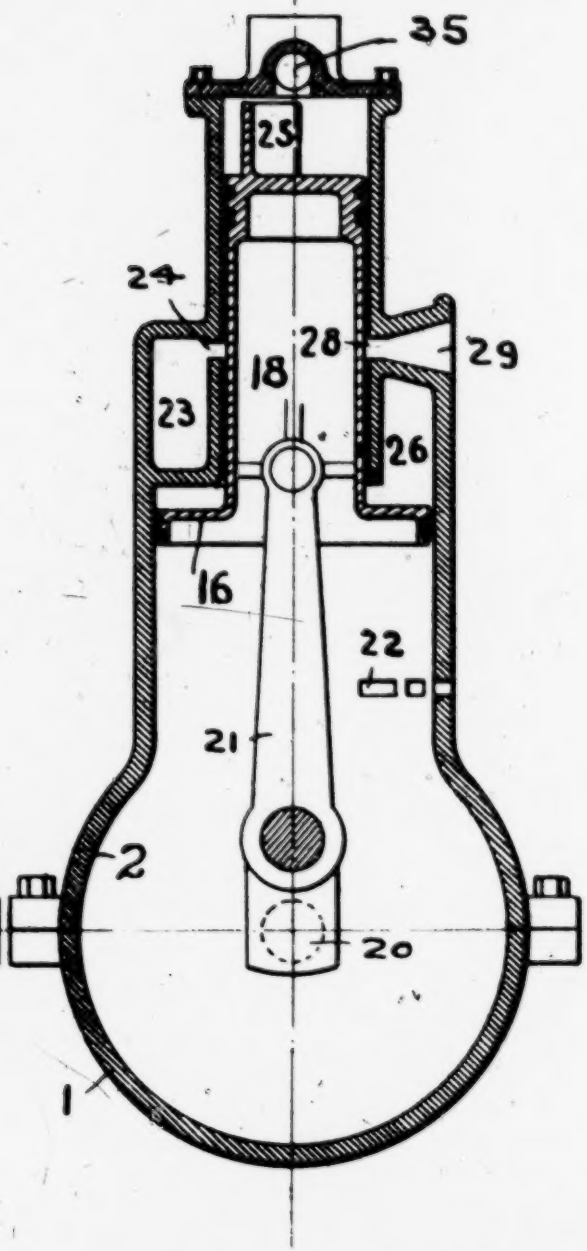

Witnesses:
Carlson.
Clara Allen

Inventor
Charles A. Sawtelle

By

Attorney

C. A. SAWTELLE.

GAS ENGINE.

APPLICATION FILED JAN. 5, 1914.

1,242,985.

Patented Oct. 16, 1917

3 SHEETS SHEET 3.

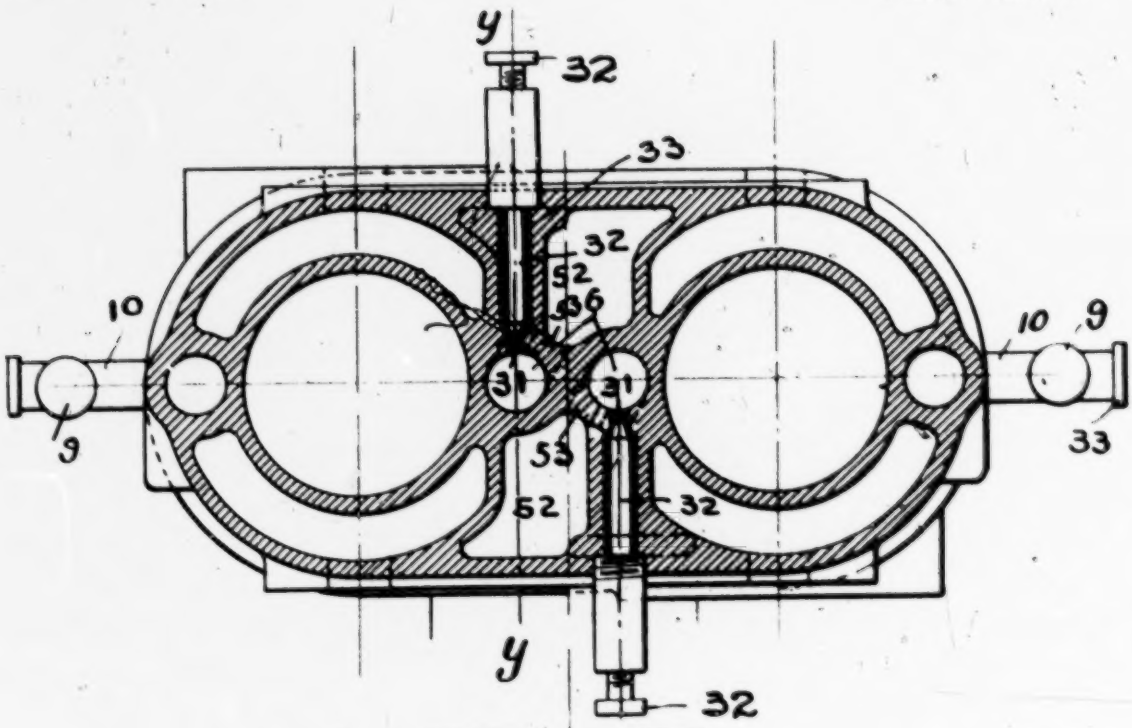

Fig. 5

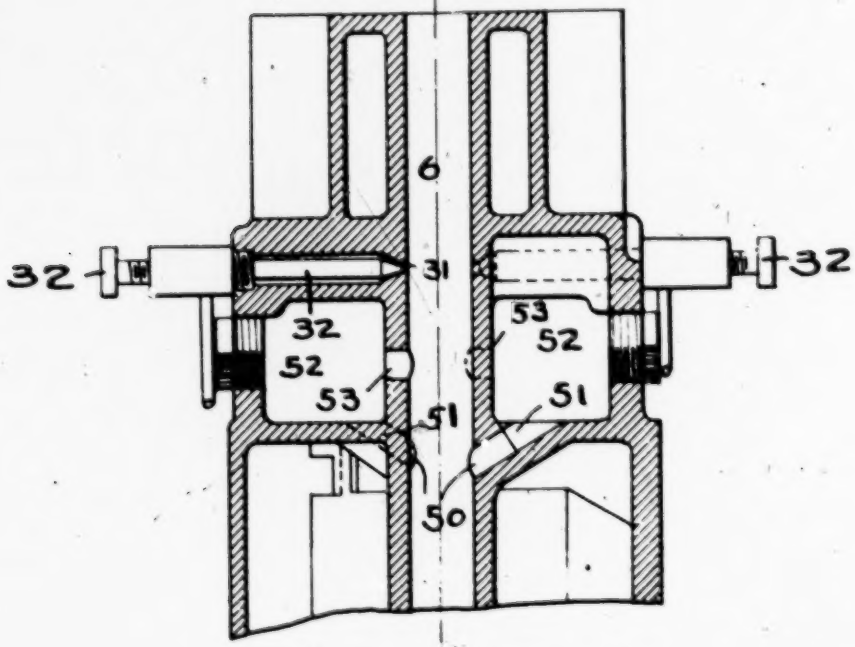

Fig. 6

Witnesses

C. A. Sean.

Clara Allen

Inventor

Charles A. Sawtelle

By W. H. Higgs

Attorney

UNITED STATES PATENT OFFICE.

CHARLES A. SAWTELLE, OF DAYTON, OHIO, ASSIGNOR TO VINCENT G. APPLE, OF DAYTON, OHIO.

GAS-ENGINE.

1,242,985. Specification of Letters Patent. Patented Oct. 16, 1917.

Application filed January 5, 1914. Serial No. 810,297.

To all whom it may concern:

Be it known that I, CHARLES A. SAWTELLE, a citizen of the United States, residing at Dayton, in the county of Montgomery and State of Ohio, have invented certain new and useful Improvements in Gas-Engines, of which I declare the following to be a full, clear, and exact description.

This invention relates to improvements in gas engines and has more particular relation to improvements in gas engines designed for burning of low grade fuels.

One of the principal objects of the invention is to provide a more efficient, reliable and more easily started gas engine adapted for use with a low grade fuel such as kerosene.

A further object is to provide an improved construction for securing more certain and reliable ignition in a gas engine.

A further object is to provide improved means for feeding compressed air together with the fuel into the engine.

With these and incidental objects in view the invention consists of certain novel constructions, combinations and arrangements of parts all of which will be hereinafter more particularly set forth and claimed.

While the invention is susceptible of numerous modifications in the construction and arrangement of parts, the preferred embodiment of the invention is illustrated in the accompanying drawings forming part of this specification and in which:

Figure 1 represents a vertical longitudinal section through the devices embodying the invention on the line C—C of Fig. 2;

Fig. 2 represents a longitudinal horizontal section through the engine half on the line A—A and half on the line B—B of Fig 1.

Fig. 3 represents a vertical transverse section through the engine on the line D—D of Fig. 1;

Fig. 4 represents a similar section on the line E—E of Fig. 1.

Fig. 5 represents a section similar to Fig. 2 but taken higher on the line X—X of Fig. 1, and

Fig. 6 represents a detail vertical section partly broken away on the line Y—Y of Fig. 5.

For the sake of illustration I have shown in the accompanying drawings, a two cylinder, two cycle type of engine with jump spark ignition but it will of course be understood that a number of the features of my invention are not limited to the two-cycle type of engine but can with equal facility be applied to any other type of gas engine, such for instance as the four cycle type.

In the aforesaid drawings 1 represents the lower half of the crank case of the engine; 2 the upper half of the crank case which is formed integral or cast "*en bloc*" with the cylinder sets. Each of these latter comprises an air cylinder 3, a gas explosion cylinder 4, and auxiliary charging cylinders 5 and 6; the former communicating with a gasolene supply through pipe 7 and port 8. A needle valve 9 is mounted in a short pipe 10 which communicates with port 8 at one end and is partly open to the air at the opposite end.

In each cylinder 5 is mounted a piston 12 provided with piston rings 13 and a pendant sleeve 14 which snugly fits the walls of the cylinder 5 and closes the ports 8 which open into pipe 10 at all times except when piston is in its lowermost position as shown in 1, when the ports 8 are uncovered.

Each piston 12 is connected by a rod 15 to its respective piston 16 having rings 17 and mounted in its air cylinder 3. Each rod 15 is reduced near its opposite ends so that it may have a certain amount of spring to accommodate any slight misalinement between the pistons 12 and 16.

The air piston 16 in each instance is formed with a reduced extension 18 which forms the main piston and which is provided with piston rings 19 and operates in the main explosion cylinder 4. Each piston 16 is connected to the crank shaft 20 by a pitman rod 21 in the usual manner.

Air ports 22 are formed in the walls of the cylinders 2 and are uncovered when the pistons 16 are in their lower positions as shown in the left hand cylinder of Fig. 1.

When the left piston 16 moves upward the pure air above it is compressed or forced into passage way or air space 23 shown in Figs. 2 and 3 and which is formed in the casting of the cylinders. It will be seen from an inspection of these figures that the passage 23 leads longitudinally from the air compression space of one cylinder 16 and discharges through ports 24 above the piston 18 of the opposed set when this latter piston is in its lower position.

Each piston 18 carries the usual baffle plate 25 so that when the air is admitted through ports 24 it is directed upward and whirling about the cylinder 4 scavengers this cylinder and blows out the burnt gas and at the same time charges it with fresh air.

The right hand air piston 16 forces air through passages 26 and ports 27 to scavenger the left hand cylinder 4 as shown in Figs. 2, 3 and 4.

The spent gases in each cylinder pass out through exhaust ports 28 and passages 29 on opposite sides of the engine.

Each of the cylinders 6 has a piston 30 similar to the pistons 12 and each piston is connected to its respective air piston 16 in the same manner as the pistons 12. These cylinders 6 however have ports 31 which are controlled by needle valves 32 mounted in passages 33 which are connected with the low grade fuel supply as shown in Fig. 6.

As best shown in Figs. 1 and 6 each of the cylinders 6 is formed with a port 50 which opens into a passage 51 which in turn connects with passage or chamber 52 in the casting of the engine. The passage 52 crosses over and connects with the opposed cylinder 6 by a port 53 as shown in Fig. 6, part of the air compressed by the piston 16 of one set passing through an elongated slot 54 formed in its respective piston 30, through port 50, passage 51, passage 52 and port 53 into the cylinder 6 of the other set.

It will be seen that the port 53 is below the port 31 so that as the piston 30 moves downward it first uncovers the port 31 and draws a charge of low grade fuel into the cylinder; then uncovers port 53 which admits the compressed air and thoroughly breaks up the charge of fuel. The cylinder 6 is thus entirely filled and the gas is under slight compression before the piston 30 starts upward. This results, when the piston moves up in the gases from the cylinders 6 having a slight lead on the gases from the cylinders 5 and tends to first fill the cylinders 4 with the low grade fuel and leave the high grade fuel in the passage 35 about the sparking points which are located well back in the passage as shown and away from the low grade gases.

The head 34 of each cylinder 4 is formed with a passage 35 connecting its respective cylinders 4 and 5; a ball valve 36 resting on a valve seat closes one end of passage 35.

A passage way 37 of much smaller diameter than 35 connects each passage 35 and its cylinder 6; a ball check valve 38 closing one end of this passage.

The area of each passage 35 is sufficiently large and is such in relation to the area of its cylinder 5 that the high grade fuel fed from the said cylinder tends to remain in the passage rather than be forced into the cylinder 4 as the gases from contracted passage 37 do.

Spark plugs 39 are arranged in the passages 35 and are connected to suitable electric sparking devices which form no part of the present invention.

After a cylinder 5 has been filled with a rich explosive mixture of gasolene and air by the downward movement of its piston 12 the charge is then compressed and forced into passage 35 first lifting the ball valve 36. The passage 35 is thus filled with a very explosive mixture only part of which has been forced into the cylinder 4. At the same time that this operation is taking place the piston 30 has compressed the charge of low grade fuel in the cylinder 6 and this charge lifting the valve 38 passes through the small passage 37 into the discharge end of the passage 35 and from there into the cylinder 4. The ball valves 36 and 38, it will be understood, prevent the air or gases from the cylinders 4 from passing into the cylinders 5 and 6.

By referring to Fig. 1 it will be seen that the pistons 12 and 30 are located higher than the piston 18 and that the throw of the crank shaft is such that very little compression space is left above these pistons 12 and 30 while the space above the piston 18 is considerably greater. As the pistons move up together the gas is thus forced from the cylinders 5 and 6 into the cylinder 4 as the pressure becomes greater in the two former cylinders.

From the foregoing description it will be seen that the explosion or power cylinders 4 have both a low and high grade fuel fed to them which results in an explosive mixture but one which might not readily ignite from the jump spark alone but which will ignite from the large and hot flame of the rich exploding gas in the passage 35.

An engine constructed as above is capable of running on a very low grade of fuel and of being readily started thus overcoming many of the objections of the present types of low-grade-fuel engines.

After the engine is started and warmed up the feed of the high grade fuel through the cylinder 5 may be cut down or in some cases cut entirely off but the preferable operation is to run with both cylinders 5 and 6 feeding fuel.

The compressed air fed to the cylinders 6 can be controlled by any suitable form of cock or valve (not shown) to secure a richer or weaker mixture in cylinders 6 as desired. The introduction of compressed air in the cylinders 6 after the introduction of the fuel results in a complete breaking up of the particles of low grade fuel and as a matter of fact starts an immediate feed of the low grade fuel into the cylinders 4. The opening of the ports 24 and 27 however is slightly

in advance of the opening of the ports 53 to secure a thorough scavenging of the cylinders 4 before any gas enters from the cylinders 6.

The high grade fuel is ignited without being appreciably weakened by admixture with the low grade fuel. This is possible as the spark plugs 39 are located well up in the passages 35 and as the gases are passing through these passages toward the cylinders and assisting in forcing the gases entering through the passages 37 downward into the cylinders. Further the passages 37 are inclined slightly downward so as to discharge into the very ends of the passages 35 and thus prevent any of the inferior gases passing up into these latter passages far enough to reach the plugs 39.

Having thus described my invention what I claim as new and desire to secure by Letters Patent is:

1. In a gas engine the combination with the main cylinder and piston, of independent cylinders and pistons both feeding to the main cylinder, a carbureter device for each of the independent cylinders whereby they receive gas charges on their suction strokes and feed high and low grade gas to the main cylinder and igniting devices for igniting a portion of the high grade gas before it reaches the cylinder and mixes with the low grade gas.

2. In a gas engine the combination with a main cylinder and piston, of auxiliary cylinders and pistons, the latter directly connected for movement with the main piston, and connections for causing said auxiliary cylinders and pistons to feed high and low grade fuels respectively to the main cylinder.

3. In a gas engine the combination with a main cylinder and piston, of a low grade fuel feeding device connected to the cylinder by a passage of restricted area and a high grade fuel feeding means connected to the cylinder by a passage of relatively larger area and sparking devices in the large area passage.

4. In a gas engine the combination with a main cylinder and piston, of an auxiliary low grade fuel cylinder and piston connected to the main cylinder by a passage way, a high grade fuel feeding cylinder and piston connected to the main cylinder by a passage relatively larger than the passage first mentioned and ignition devices in the larger passage for firing the high grade fuel before it mixes with the low grade fuel.

5. In a gas engine the combination with a main cylinder and piston, of auxiliary cylinders and pistons for high and low grade fuels respectively connected to and moving with the main piston and connections between the auxiliary cylinders and main cylinder of such restricted area as to cause the contents of the auxiliary cylinders to feed into and be compressed in the greater compression area in the main cylinder.

In testimony whereof I affix my signature in the presence of two witnesses.

CHARLES A. SAWTELLE.

Witnesses:

VINCENT G. APPLE,

CLARA ALLEN.

C. F. KETTERING & W. A. CHRYST.

IGNITION SYSTEM.

APPLICATION FILED APR. 3, 1916.

1,265,454. Patented May 7, 1918.

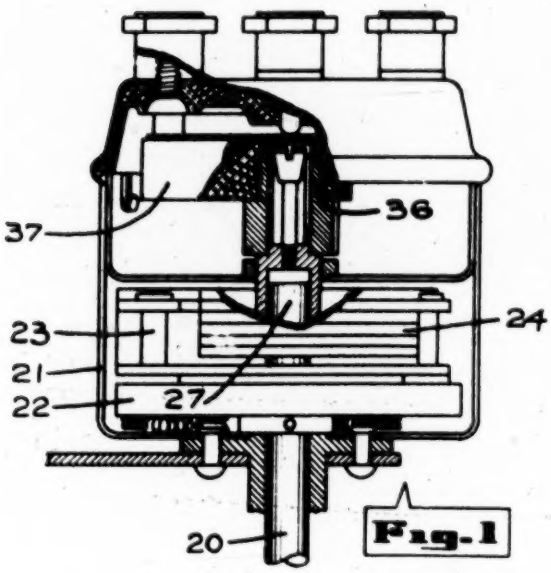

Fig. 1

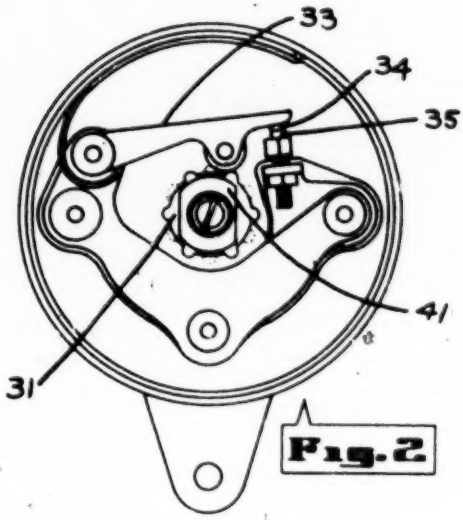

Fig. 2

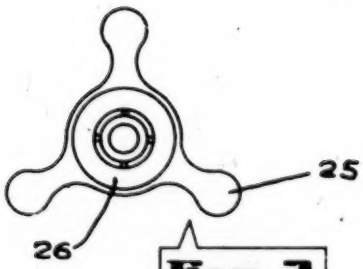

Fig. 3

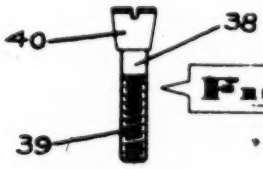

Fig. 6

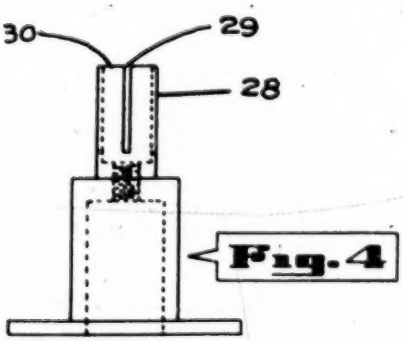

Fig. 4

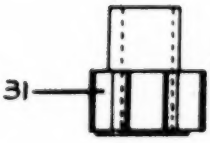

Fig. 5

Witnesses

Walter W. Riedel

Joseph W. McDonald

By

Inventors

Charles F. Kettering

William A. Chryst

Kerr, Page, Cooper & Hayward

Attorneys.

UNITED STATES PATENT OFFICE.

CHARLES F. KETTERING AND WILLIAM A. CHRYST, OF DAYTON, OHIO, ASSIGNORS TO THE DAYTON ENGINEERING LABORATORIES COMPANY, A CORPORATION OF OHIO.

IGNITION SYSTEM.

1,265,454. Specification of Letters Patent. Patented May 7, 1918.

Application filed April 3, 1916. Serial No. 88,546.

To all whom it may concern:

Be it known that we, CHARLES F. KETTERING and WILLIAM A. CHRYST, citizens of the United States of America, residing at Dayton, county of Montgomery, and State of Ohio, have invented certain new and useful Improvements in Ignition Systems, of which the following is a full, clear, and exact description.

This invention relates to an improvement in ignition systems, and more particularly to that type of ignition systems which are combined with combustion or explosion engines, and which include mechanism for properly timing and distributing the sparking impulses of the ignition system.

One of the objects of the present invention is to provide means for the adjustment of certain parts of the timing mechanism of the ignition system, whereby the position of the adjusted parts may be easily locked and maintained with precision, without danger of altering the effected adjustment of the parts during the locking operation.

Further objects and advantages of the present invention will be apparent from the following description, reference being had to the accompanying drawings, wherein a preferred form of one embodiment of the present invention is clearly set forth.

In the drawings:

Figure 1 is a view in side elevation of one form of the present invention, wherein some of the elements of the timing and distributing unit are shown in section, while others are shown in elevation for the sake of clearness.

Fig. 2 is a top plan view of the unit shown in Fig. 1, with the distributer head and rotor removed to clearly illustrate the spark timing mechanism.

Figs. 3, 4, 5 and 6 are detail views of certain of the elements included in the present invention.

Referring to Fig. 1, there is disclosed what may be termed a timing and distributing mechanism, which is adapted to control the time of occurrence and the distribution of sparking impulses to an engine. This timing and distributing device is preferably driven by the engine at any predetermined ratio of speed, through a connection with the shaft 20. This shaft 20 projects into the casing 21 and is secured to a plate or disk 22, which in turn carries pins 23. These pins 23 form pivot points for the weights 24, which are mounted thereon in any suitable manner.

Each of the weights 24 engage with arms 25 of the cam carrying element 26, which in turn is mounted upon the stub shaft 27, carried by the disk 22. This cam carrying element, together with the weights 24 and certain other elements not disclosed in the drawings, form an automatic control mechanism whereby the cam carrying element is actuated relative to the engine driven shaft 20, in accordance with the varying speeds of the engine.

This automatic control mechanism above referred to, forms a part of the subject matter of the co-pending application, Serial No. 55,160, filed October 11, 1915, and no further description of these elements is deemed necessary in the present application, except where description is necessary to clearly bring out features of the present invention.

The cam carrying element 26, as has been stated heretofore, fits over the stub shaft 27, and is provided with a reduced head portion 28, which is tubular in conformation and which is suitably slotted at 29, so as to provide a plurality of expansible and slightly resilient fingers or portions 30.

This reduced head portion or shank 28 carries and supports the cam 31, which is provided with suitable lobes 32, to actuate the contact plate 33 to make and break the contact between the points 34 and 35, see Fig. 2.

The cam element 31 is provided with a reduced head portion or shank 36, which is provided with a flat on each side, as at 41, to prevent relative movement of the distributer rotor 37, which is carried by the cam element directly.

It is well known to those skilled in the art that it frequently becomes advisable to change the adjustment of the cam and rotor, relative to the contact plate 33 and the stationary contacts 34 and 35 of the distributer.

It is also well understood that this adjustment of the cam element and the rotor must be maintained with precision, so as to secure the efficient operation of the timing and distributing mechanism.

In the form of the invention shown in the present instance, the locking element 38 comprises a bolt or screw, having a threaded

portion 39 and a wedge-shaped head or expanding portion 40. This locking element is inserted within the tubular portion 28 of the cam carrying element 26, and may be screwed into the threaded bore formed in the portion 28 of the cam carrying element 26, see Figs. 1 and 4.

As this locking element is being screwed home, the wedge shaped head tends to cause the resilient fingers to expand and to frictionally engage the cam carrying element 26, and to securely lock the same in its adjusted position.

It will therefore be seen that not only the cam element 26, but also the rotor of the distributer will be locked or held in a fixed adjusted position by means of this locking element 38, inasmuch as the rotor of the distributer is carried directly by the cam element 26.

When it is desired to effect further adjustment of the cam and distributer rotor, it is simply necessary to unscrew the locking bolt 38, and manually set the cam to the desired position and then screw the locking element back into locking position.

By referring to Fig. 1, it will be noted that the locking element does not directly engage with any element which is capable of permanent adjustment relative to the engine driven shaft. Therefore, there is no tendency to actuate either the cam directly or indirectly during the locking operation, that is, during the time that the locking element is being screwed home. Therefore, there is no tendency to throw the cam out of its set position.

While the form of mechanism herein shown and described constitutes a preferred form of embodiment of the invention, it is to be understood that other forms might be adopted, all coming within the scope of the claims which follow.

What we claim is as follows:

1. In a device of the character described, the combination with a driving shaft; of an ignition system, including a cam carrying element connected to said driving shaft, said element having a slotted shank portion; a cam adapted to fit over said shank portion; and means for expanding said slotted shank into contact with the cam to maintain said cam in adjusted position.

2. In a device of the character described, the combination with a driving shaft; of an ignition system, including a cam carrying element connected to said driving shaft, said element having a slotted shank portion; a cam adapted to fit over said shank portion; a distributer rotor carried by said cam; and means for expanding the slotted shank into contact with said cam to adjustably maintain the cam and rotor in adjusted position.

3. In a device of the character described, the combination with a driving shaft; of an ignition system, including a cam carrying element connected to the driving shaft; said element having an expansible shank portion; a cam adapted to fit over said shank portion; and means operable relative to the expansible portion for locking said cam in adjusted position.

4. In a device of the character described, the combination with a driving shaft; of an ignition system, including a cam carrying element connected to the driving shaft; said element having an expansible shank portion; a cam adapted to fit over said shank portion; and a locking element having a wedge-shaped head adapted to be forced into said shank portion to expand the same and thereby lock the cam in adjusted position.

In testimony whereof we affix our signatures in the presence of two subscribing witnesses.

CHARLES F. KETTERING.
WILLIAM A. CHRYST.

Witnesses:
J. W. McDONALD,
R. P. CARR.

P. FELIX.

MULTICYLINDER ENGINE.

APPLICATION FILED DEC. 8, 1916.

1,276,891.

Patented Aug. 27, 1918.

3 SHEETS—SHEET 1.

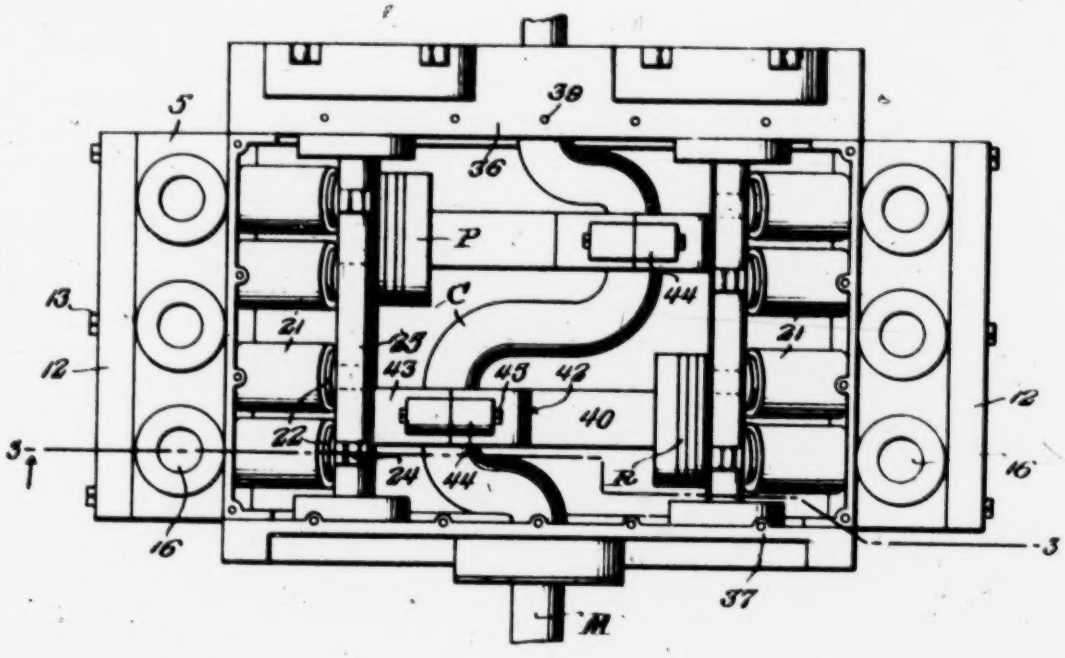

Fig. 1.

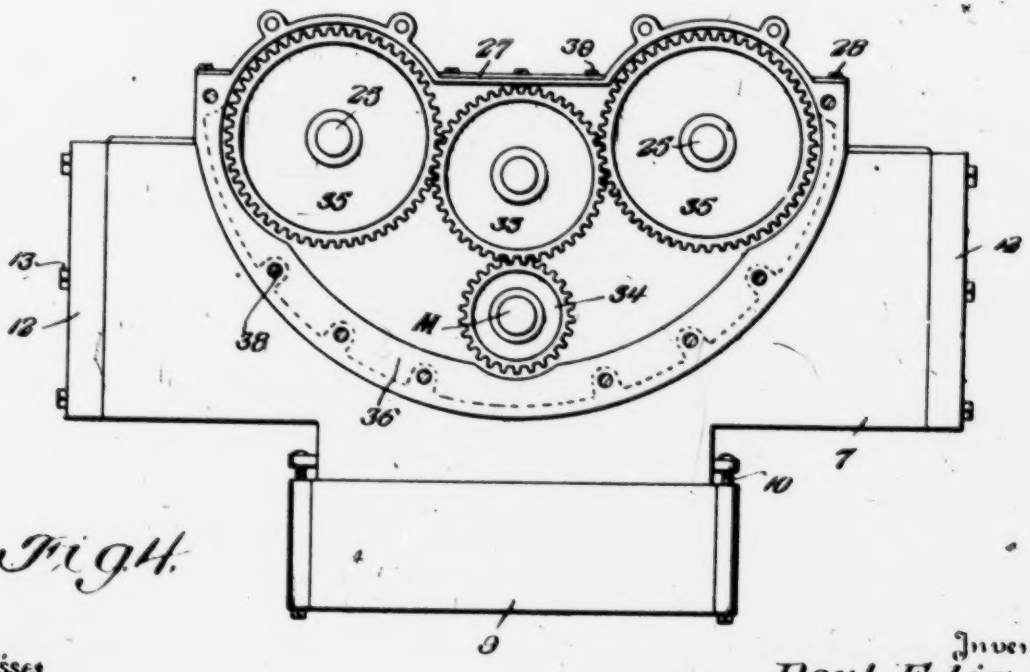

Fig. 4.

Witnesses

J. H. Crawford.

N. Coleman

Inventor

Paul Felix,

By Victor J. Evans

Attorney

P. FELIX.

MULTICYLINDER ENGINE.

APPLICATION FILED DEC. 8, 1916.

1,276,891.

Patented Aug. 27, 1918.

3 SHEETS SHEET 2.

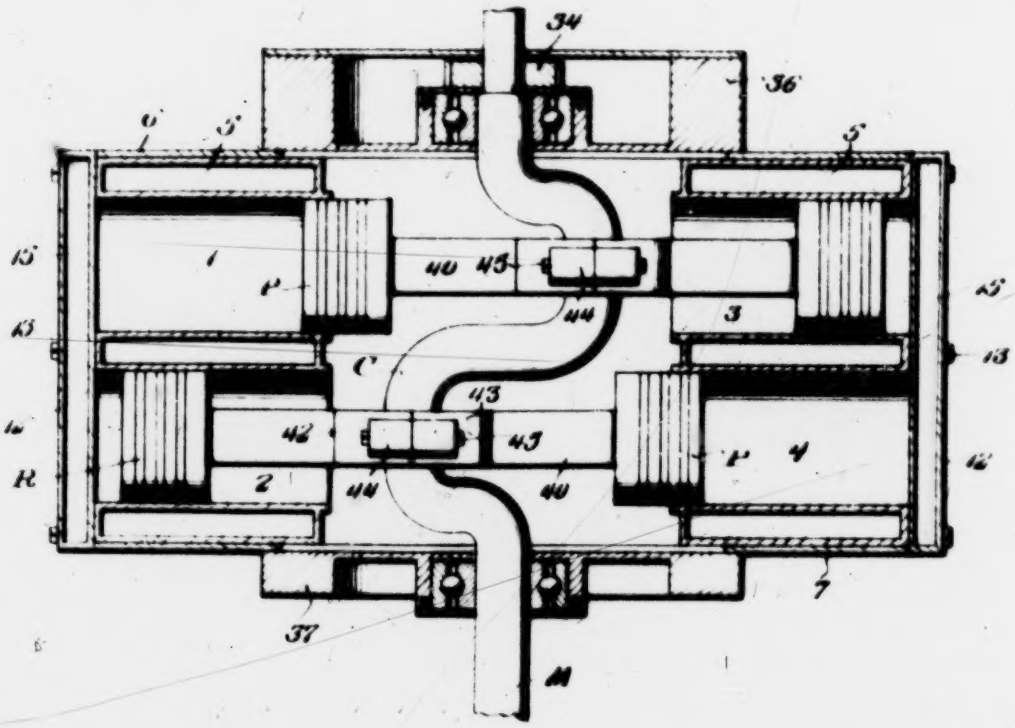

Fig. 2.

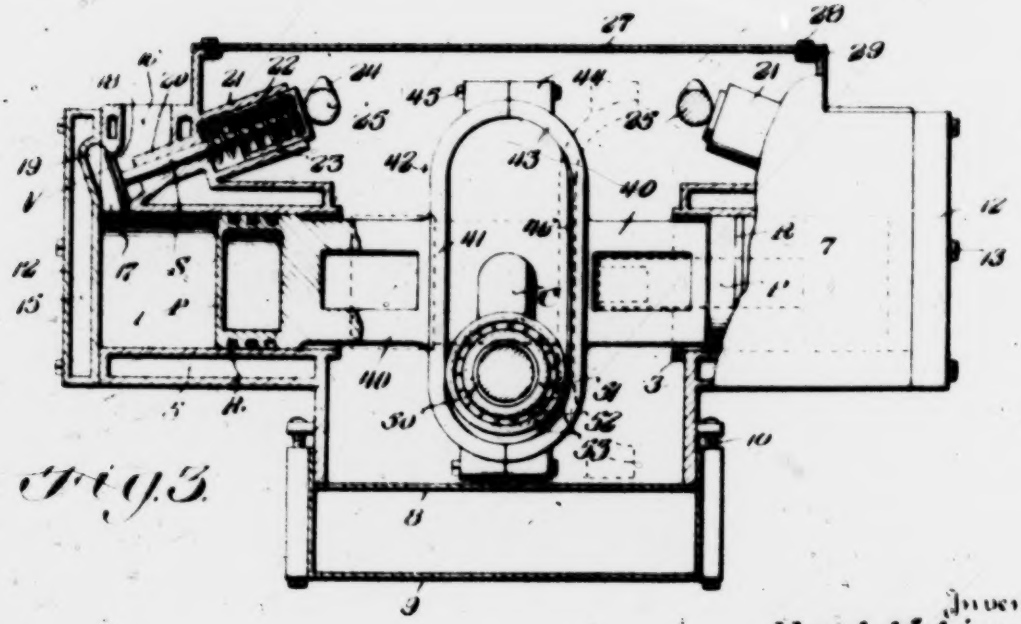

Fig. 3.

Witnesses

J. H. Crawford.

N. F. Ellamer.

Inventor

Paul Felix.

By Victor J. Evans

Attorney

P. FELIX.

MULTICYLINDER ENGINE.

APPLICATION FILED DEC. 8, 1916.

1,276,891.

Patented Aug. 27, 1918.

3 SHEETS—SHEET 3.

Fig. 6.

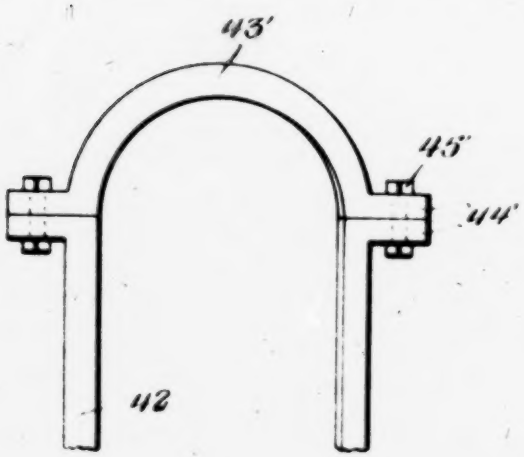

Fig. 4.

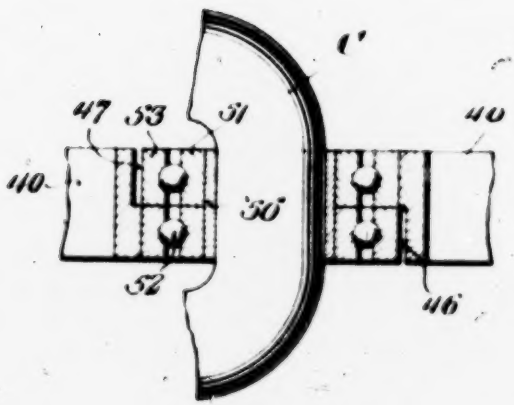

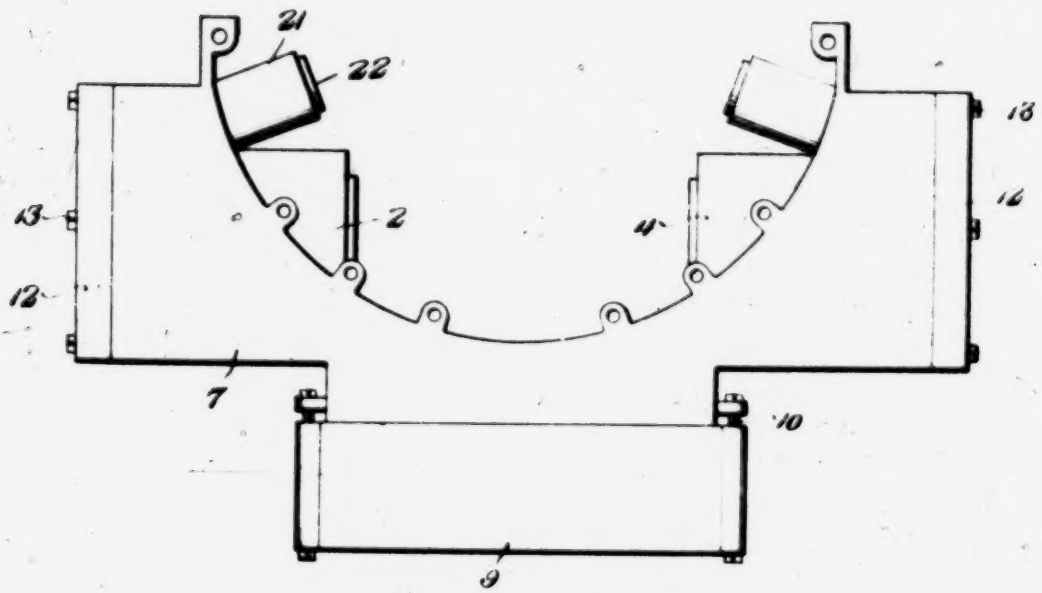

Fig. 5.

Inventor

Paul Felix,

Witnesses

J. H. Crawford

N. L. Cleaver

By Victor J. Evans

Attorney

UNITED STATES PATENT OFFICE.

PAUL FELIX, OF KNOXVILLE, TENNESSEE.

MULTICYLINDER ENGINE.

1,276,891. Specification of Letters Patent. Patented Aug. 27, 1918.

Application filed December 8, 1916. Serial No. 135,843.

To all whom it may concern:

Be it known that I, PAUL FELIX, a citizen of the United States, residing at Knoxville, in the county of Knox and State of Tennessee, have invented new and useful Improvements in Multicylinder Engines, of which the following is a specification.

This invention relates to internal combustion engines, and more especially to those having opposed cylinders; and the objects of the same are to eliminate the conventional connecting rods, to permit of the casting of the cylinders *en bloc* with the crank case, to provide a special structure whereby the two cam shafts and the crank shaft may be bodily removed, to protect the shafts and the valves and pistons within a single housing and lubricate them automatically, to provide a special mounting for the roller bearings between the pistons and the cranks, and generally to simplify construction, reduce friction and increase power. These and other objects will be accomplished by the construction hereinafter more fully described and claimed, and as shown in the drawings wherein—

Figure 1 is a plan view of this engine with the cover removed.

Fig. 2 is a horizontal section.

Fig. 3 is a vertical section with the cover in place, being taken on about the line 3—3 of Fig. 1.

Fig. 4 is an end view of the entire structure, Fig. 5 an end view of the main casting, Fig. 6 an enlarged detail of a slight amplification, and Fig. 7 a horizontal section through the bearing for one of the cranks.

In the accompanying drawings is shown my invention as applied to a four-cylinder engine, although of course it will be understood that I am not limited in this respect. Also the cylinders are shown as water-jacketed, each with an inlet and an outlet valve whose details of construction are not important, and I have purposely omitted other features not involved in this invention, as, for instance, the ignition system, the timing system, the carbureter, etc. One casting in the present instance is made to include the four cylinders 1, 2, 3, 4 and their water jackets 5; and the cut out end plates 6 and 7 are attached to the crank casing. The bottom of the latter may be closed by an integral plate or by a separate bottom plate as shown at 8 in Fig. 3, and there may be a subjacent pan 9 adjustably supported as by screws 10 engaging lugs. The outer ends of the cylinders are closed by heads 12 preferably having their own jackets 15, and these heads are held removably in place by screws 13. The casting also contains valve chambers 16, each communicating by means of a port 17 with its own cylinder and having its own seat 18 which is preferably inclined as explained below, the inner jacket wall of the head plate 12 being indented as at 19 to give free movement to the valve heads V. The casting is also formed with a tubular guide or boss 20 standing at about twenty degrees above a horizontal and through which passes the valve stem S. The casting also carries, or it may be formed integral with, a spring chamber 21 which stands coaxial with the boss 20 and into which the stem S projects. Said stem at its inner end is provided with any suitable form of head or cap 22, and a coiled expansive spring 23 surrounds the stem between this cap and the lower end of the chamber for holding the head of the valve V normally against its seat 18 as usual. The cam 24 on the cam shaft 25 bears against the cap 22—all as best seen in Fig. 3, but I do not consider it necessary to illustrate or describe the inlet manifold or the exhaust manifold. The charge is supplied to the inlet valve and the burnt gases taken from the outlet valve in any suitable manner forming no part of the present invention. Within each cylinder reciprocates a piston P having the usual rings R. The cylinders in the present case are arranged in pairs, opposed to each other, numbers 1 and 3 being opposite and alined with each other and numbers 2 and 4 opposite and alined. Between them stands the main shaft M which in the present case is shown as provided with two cranks C. The open top of the crank casing (which latter is shaped to include the parts already described) is closed by a cover plate 27 held removably in place by screws 28 engaging holes 29 in the shell of said casting, or in any other appropriate manner.

One important feature of my invention is the removability of the main shaft and the two cam shafts, without disturbing other elements, and this is accomplished as follows: There are two removable end plates 36 and 37 bolted at 38 respectively to and complementing the end plates 6 and 7, and

at 39 to the ends of the cover plate, and each removable end plate has bearings for the three shafts mentioned; the cam shafts having gears 35 beyond one end plate, the main shaft having a half sized gear 34, and an idle gear 33 connecting them as best seen in Fig. 4. Thus it will be seen that, when the cover plate is removed and the end plates 36 and 37 detached from the main casting, said plates and shafts may be lifted entirely out of the main casting in a manner which will be made clear below, and then, by first removing the gears, the plates and their bearings can be slipped off from the extremities of the shafts. Also by a reversal of the operation, the parts can be quickly restored to their original position after repairs have been made.

Another important feature of my invention is the specific means employed for communicating the reciprocating motion of opposed pistons to the cranks of the main shaft, resulting in rotary motion of the latter, while doing away with the usual connecting rods and this is accomplished as follows: The stems 40 of each pair of pistons are carried inward and respectively connected (preferably integrally) with the heads of sides 41 or an upright yoke 42 of loop or oval shape which stands midway between the two piston heads P. The upper and lower ends of the sides 41 are by preference arched toward each other as at 43 and provided with external lugs 44 detachably connected by means of bolts 45; and one-half of the inner face of one side is cut away or recessed as seen at 46 on Fig. 7, while the other half of the opposite side is cut away or recessed as at 47, for a purpose yet to be described.

Around the crank C is preferably shrunk a sleeve or collar 50, around this in turn and standing side by side are closely fitted channeled rings constituting the inner races or members 51 of two roller or ball bearings, next outside these members are the balls 52, and next outside the balls are the channeled rings constituting other races or members 53; and by reason of the cutaway portions or recesses 46 and 47, these outer members have each a certain clearance within one side of the yoke 42. That is to say, the left side 41 of the yoke on the piston within cylinder 1 forms a track which contacts closely with the outer member 53 of its roller bearing, whereas the right side has a clearance as at 47, and the reverse is true of the piston within the opposite cylinder. The result is that, during the operation of the engine, the turning of the main shaft M causes the rotation of the crank C; the latter carries with it the sleeve or collar 50 and the inner member 51 of the bearing, the balls or rollers 52 therein move at half speed, and the outer member 53 rises and falls within the yoke, but it serves as a wheel and rolls as it travels up and down in contact with the track at the left side 41 thereof whereas the right side of the yoke by reason of the clearance 47 is out of contact with the right side of such wheel 53 to permit its rolling. It is to be understood that the parts are all lubricated by a splash system, because the casing contains a volume of oil which is kept in constant agitation by the reciprocating movements of the pistons and the yokes and the rotary movement of the cranks, with the result that the pistons are well oiled where they reciprocate within their cylinders, the cranks and the bearings where they move within their yokes, the valve stems and caps where they move within their guides and chambers, and the cams where they contact with said caps,—therefore no additional system of lubrication is necessary.

In Fig. 6 I have illustrated a slight amplification, which consists in closing the upper end of each yoke 42 by a semi-circular arched member 43′, connecting the latter by lugs 44′ and bolts 45′ with the upper ends of the straight upright sides 41, instead of across the top of the arch as best seen in Fig. 3. When these arches 43′ are removed it is obvious that the crank shaft may be lifted out of the yokes without disconnecting the sides of the latter at the bottom. This amplified construction may be used although it involves an additional bolt and additional parts, but I do not wish to be limited in this respect.

The operation of engines of this kind is too well understood to need a detailed description here. The construction which I have illustrated and described will produce the advantages herein set forth in this specification, and I do not wish to be limited to details beyond those recited in the following claims.

An important feature of the present invention is the accessibility of the moving parts of this engine from within the casing when the shafts are removed as above suggested, and from the sides of the casing at all times by withdrawing or removing the heads 12. The latter operation of course exposes the outer ends of the cylinders, the piston and valve heads, and the valve seats; and the inner ends of the cylinders as well as the caps at the inner ends of the valve stems are exposed from the interior of the casing. By removing said caps the valves can be drawn out for grinding, repair, or substitution. When it is necessary to remove a piston, the two sides of the yoke are disconneted as above described, two opposed pistons turned until the respective sides of their yokes stand at right angles to each other as dotted in Fig. 3, and one piston moved outward to the extreme within its cylinder when the other

piston may be moved inward until its head comes out of its own cylinder, and then lifted out of the casing.

If it be desired to remove the crank shaft without taking the pistons out of the casing, the arches 43' at the upper end of the yoke are detached by removing the bolts 45' which are easily accessible when the top plate is withdrawn, and the crank shaft and both the cam shafts may be lifted out in a manner already described and without disarranging the connection of any pair of opposed pistons. The wheels 53 and their roller bearings come out with the main shaft at this time, because the removal of the arches uncovers the upper end of the track on which these wheels travel.

What is claimed as new is:

In an internal combustion engine, the combination with opposed cylinders, pistons therein, a main shaft whose cranks stand between relatively opposite pistons, and a sleeve fast on its crank; of an upright loop-shaped yoke connecting the stem of each pair of pistons and made of an arched top, upright sides whose inner faces are cut away at their respectively opposite edges to leave tracks along their remaining edges, and means for connecting the lower end of their sides and the extremities of the top to the upper end of the track, and on each sleeve two bearings including channeled ring-shaped inner members disposed side by side on the sleeves, balls in their respective channels, and channeled outer members surrounding said balls and constituting wheels, each traveling on one of said tracks within the yoke as the latter reciprocates during the rotation of the crank.

In testimony whereof I affix my signature.

PAUL FELIX.

W. H. PITTS.

AUTOMATIC COMMUTATOR.

APPLICATION FILED JULY 9, 1917.

1,281,204.

Patented Oct. 8, 1918.

3 SHEETS—SHEET 1.

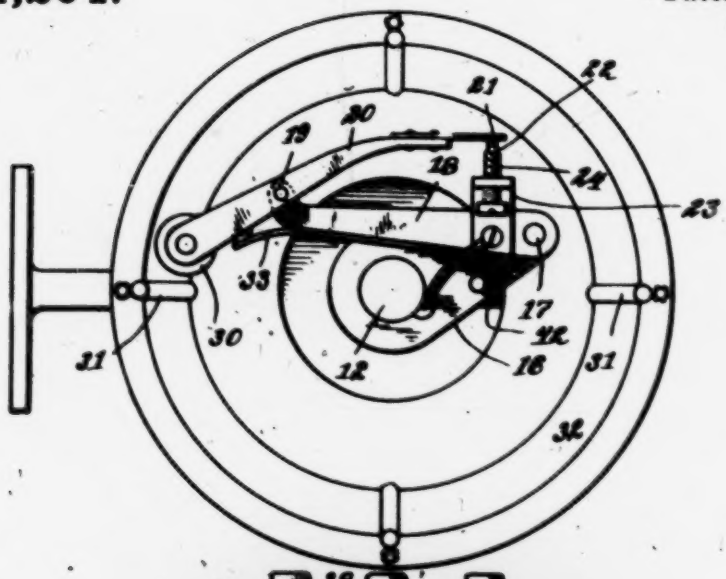

Fig. 1

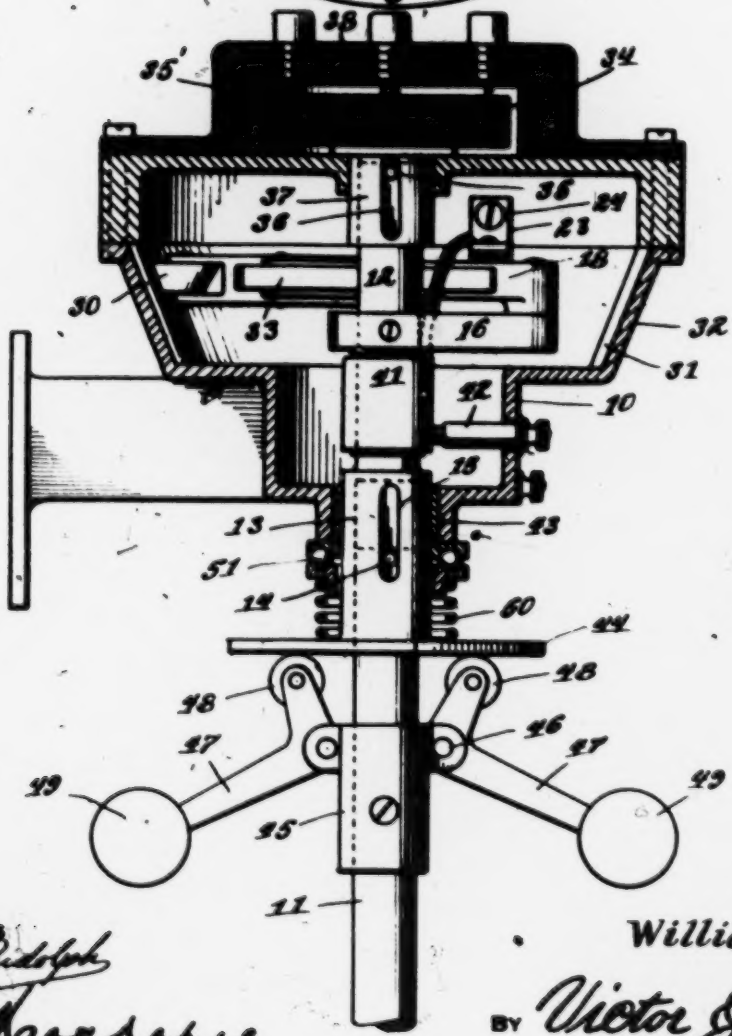

Fig. 2

WITNESSES:

C. F. Rudolph

T. L. Moorhouse

INVENTOR

William H. Pitts,

BY Victor J. Evans

ATTORNEY

P-127

W. H. PITTS.

AUTOMATIC COMMUTATOR.

APPLICATION FILED JULY 9, 1917.

1,281,204.

Patented Oct. 8, 1918.

3 SHEETS—SHEET 2.

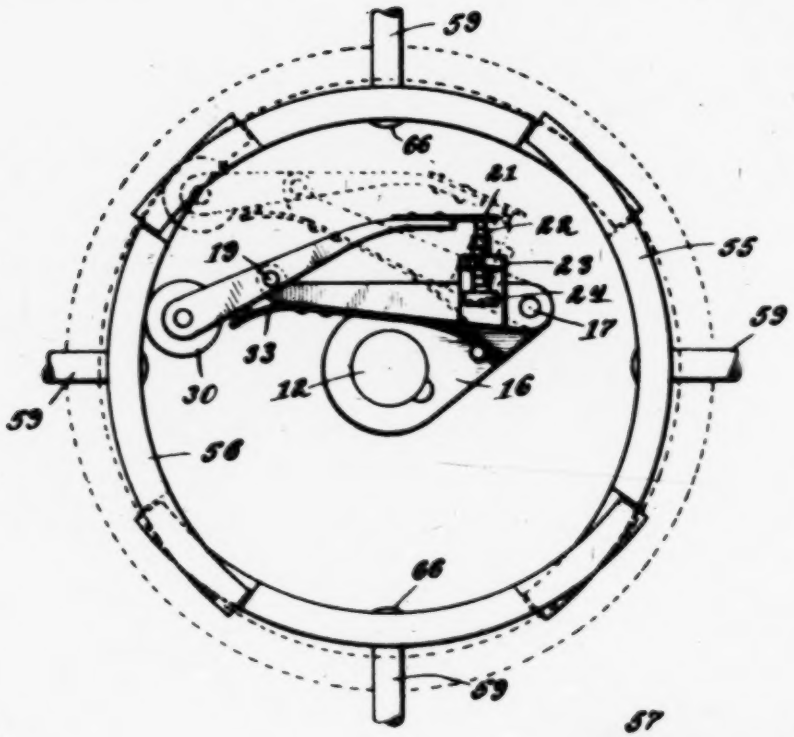

Fig. 6

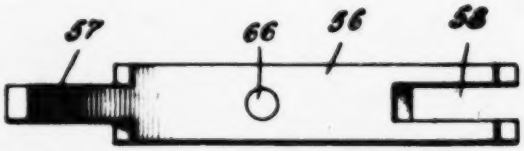

Fig. 7

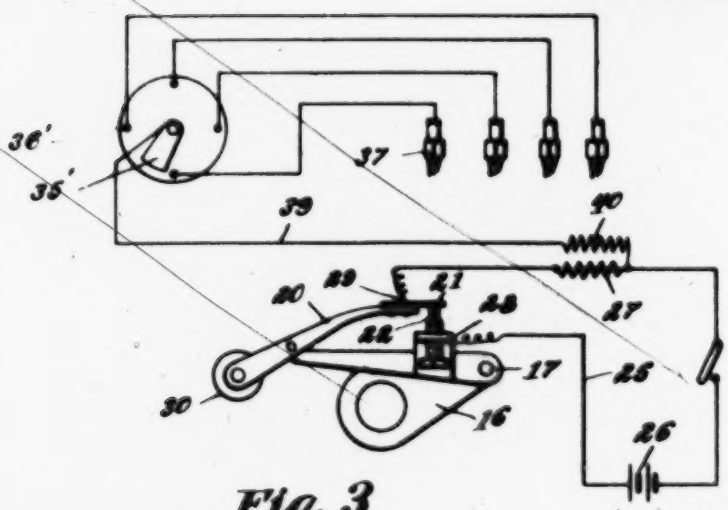

Fig. 3

WITNESSES

INVENTOR

William H. Pitts,

BY Victor J. Evans

ATTORNEY

W. H. PITTS.

AUTOMATIC COMMUTATOR.

APPLICATION FILED JULY 9, 1917.

1,281,204.

Patented Oct. 8, 1918.

3 SHEETS—SHEET 3.

Fig. 4

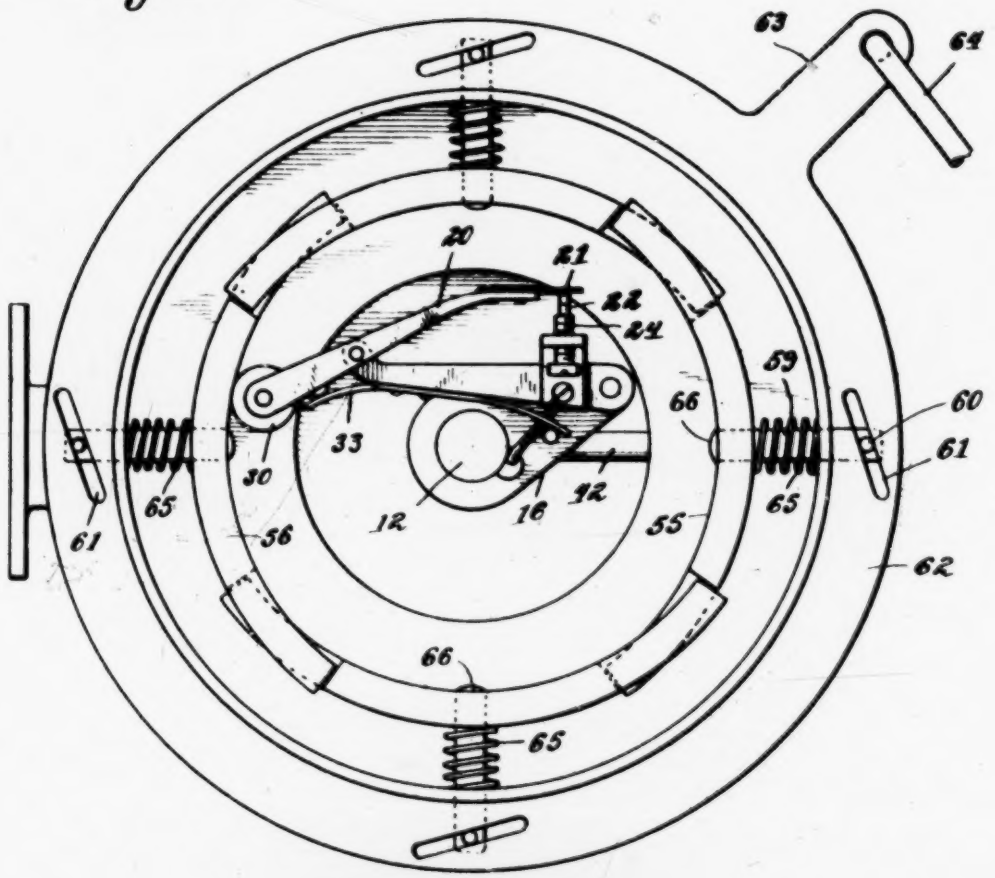

Fig. 5

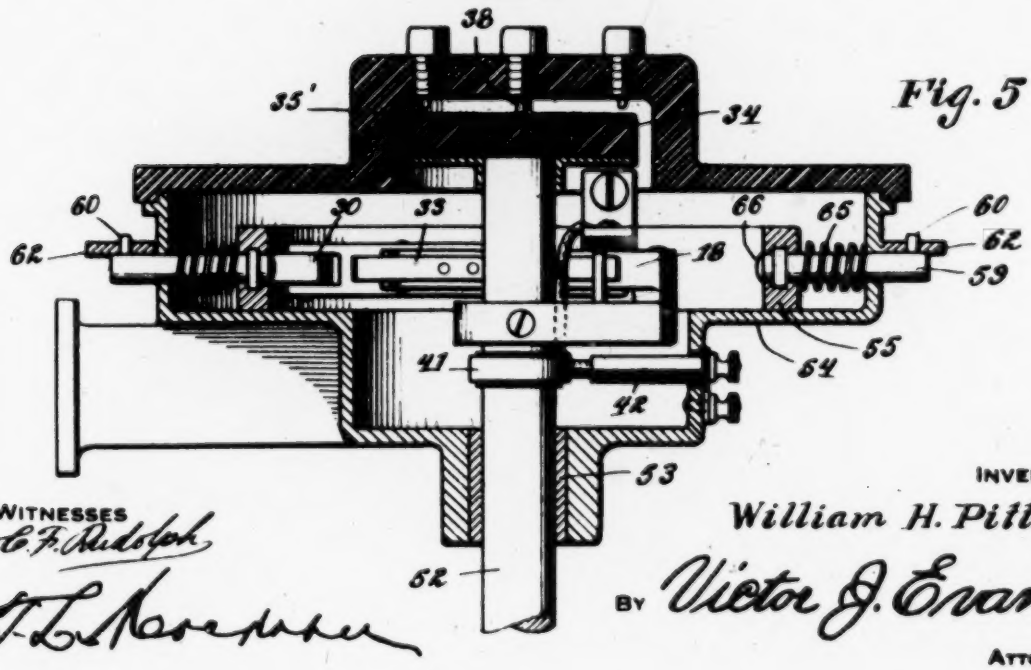

WITNESSES

C. F. Rudolph

F. L. Moorehead

INVENTOR

William H. Pitts,

BY Victor J. Evans

ATTORNEY

UNITED STATES PATENT OFFICE.

WILLIAM H. PITTS, OF WALLA WALLA, WASHINGTON.

AUTOMATIC COMMUTATOR.

1,281,204. Specification of Letters Patent. Patented Oct. 8, 1918.

Application filed July 9, 1917. Serial No. 179,506.

To all whom it may concern:

Be it known that I, WILLIAM H. PITTS, a citizen of the United States, residing at Walla Walla, in the county of Walla Walla and State of Washington, have invented new and useful Improvements in Automatic Commutators, of which the following is a specification.

This invention relates to commutators for use in connection with internal combustion engines and aims to provide means whereby the ignition spark may be advanced or retarded to control the speed of the engine.

An object of the invention is to provide means whereby the interrupter arm may be either automatically or manually moved with respect to its operating shaft and consequently with respect to the position of the engine piston, so as to cause a change in the time of the explosion of the charge within the cylinder.

A further object of the invention is to provide a novel form of interrupter arm including novel means of mounting the same, the said arm being normally adapted to travel within a given radius, which may be increased or decreased to cause a change of position of the said arm with respect to the shaft, for the purposes above set forth.

With the above and other objects in view, the invention consists of the following novel combination and arrangement of parts, hereinafter more fully described and illustrated in the accompanying drawings, in which—

Figure 1 is a top plan view of a commutator constructed in accordance with the present invention, the cover and distributer disk being removed;

Fig. 2 is a central sectional view through the commutator complete;

Fig. 3 is a diagrammatic view illustrating the wiring of the commutator and its connection with the spark plugs of an engine;

Fig. 4 is a plan view of a modified form of the invention, with the cover and distributer disk removed;

Fig. 5 is a central sectional view of the commutator showing Fig. 4 complete;

Fig. 6 is a detail plan view showing the normal position of the parts in full lines and showing by dotted lines the position of the parts when the spark is advanced; and

Fig. 7 is a detail perspective view of one of the sections of the expansible ring shown in Fig. 6.

Referring to the drawings in detail, 10 includes a casing, in which is mounted a shaft 11 driven from any suitable source of power, for example, through a suitable gearing connected to the cam shaft of the engine, so that the said shaft 11 will be timed to rotate with the operation of the engine piston.

The shaft 11 is formed in two sections, the upper section 12 of which is connected with the lower section through the medium of a sleeved end 13, the adjacent end of the lower section fitting within this sleeve and carrying a pin 14, which operates within a slot 15 provided in the sleeve, in order that the upper section may be moved longitudinally with respect to the lower section 12.

The upper section 12 of the shaft has secured thereto an arm 16, which is adapted for rotation with said shaft, the said arm having pivoted upon its outer end as indicated at 17 one end of a lever 18. The opposite end of this lever has pivoted thereto as shown at 19 an interrupter arm 20, the said arm being pivoted intermediate its ends, and one end of which is provided with a contact point 21, which is adapted for engagement with the contact point 22, which is adjustably mounted upon the lever 18 by means of a bracket 23 and an adjusting screw 24. The contact points 21 and 22 are included in the primary electric circuit 25, which receives current from a suitable source 26. Also included in this circuit is a primary coil 27, one terminal of the circuit being connected to one switch point as shown at 28, while the other terminal is connected to the opposite switch point as shown at 29.

The arm 20 preferably carries at its outer end a roller 30, which when the shaft 11 is rotated, is adapted to contact with a series of spaced interrupter points 31, supported by an inclined wall 32 of the casing 10, the roller 30 being held in engagement with the wall 32 through the medium of the spring 33.

The upper end of the section 12 of the shaft 11 is connected to a distributer disk 34 through the medium of a pin 35, which is keyed to the slot 36 provided in the sleeve 37 secured to the under side of the disk 34. This disk is rotatable with the shaft 11 and carries a contact plate 35′, which is adapted to successively engage the series of contact points 36′, which are electrically connected to the spark plugs 37 of the engine cylinders.

The contact plate 35' is engaged with the brush 38, which is connected to the secondary circuit through the medium of a conductor 39 in the secondary coil 40.

Mounted upon the section 12 of the shaft 11 is a collector ring 41, which the brush 42 engages in the usual manner.

From the foregoing it is apparent that the rotation of the shaft 11 will cause the roller mounted upon the end of the arm 20 to successively engage the interrupter points 31 to break the circuit 25 through the contacts 21 and 22 to make the spark.

In order to advance the spark it is necessary to change the position of the end of the arm 20 which contacts with the interrupter points, with respect to the shaft 11 and to accomplish this, the said shaft is mounted for vertical movement within a bearing 43 in the casing 10, the sleeve 13 upon which connection is made between the two sections of the shaft being provided with an annular flange 44. Mounted upon the shaft 11 beneath the flange is a sleeve 45, provided with ears 46, between which are provided bell crank levers 47, one end of each of said levers being provided with a roller 48, which engages the under face of the flange 44, while the opposite ends of each of the bell cranks is provided with a weight 49, the whole providing a centrifugal governor which is operated by the rotation of the shaft to move the section 12 thereof vertically as will be understood by reference to Fig. 2 of the drawings. Interposed between the disk 44 and the casing 10 is a coil spring 50, one end of which bears against the upper face of the flange and the opposite end bearing against a thrust bearing 51, so as to provide for a free rotation of the flange and at the same time exert a downward pressure upon the centrifugal governor.

With the increased speed of the shaft 11, the governor will cause the upper section 12 of the shaft to rise, carrying with it the interrupter arm 20 and as the spring 42 acts to force outwardly the end of the arm carrying the roller 30, the angular position of this roller will be changed with respect to the shaft 11, moving the roller around said shaft in an arc tangent thereto, so that the spark will occur in advance of its normal time. The reduction of the speed of the shaft 11 will cause the lowering of the section 12 and a movement of the roller 30 around the said shaft in the opposite direction, causing the consequent retarding of the spark.

In the form of the invention shown in Figs. 4 to 7 inclusive, the shaft 52 is not movable longitudinally, it being mounted for rotation upon the bearing 53 provided with a casing 54.

This casing has located therein an expansible ring 55 composed of a plurality of arcuate sections 56, each of which is formed at one end with a tongue 57, and its opposite end with a slot 58, the tongue 57 of one section entering the slot 58 of the adjacent section and capable of sliding movement therein.

Each of the sections 56 is provided with a radially arranged rod 59, one end of which is secured to the section 56, the opposite end of the said rod being provided with a pin 60, which is adapted to engage the cam slot 61 provided in the ring 62, which surrounds the casing 54 and is capable of rotation thereon. The ring 62 is provided with an arm 63, which is connected to any suitable automatic or manually operating means through the medium of a rod 64. A movement of the ring 62 around the casing 54, will through the medium of the slots 61 cause the section 56 of the ring 55 to move inward or outward, to increase or decrease the diameter of the ring, to change the position of the roller 30 with respect to the shaft 52 as set forth in the description of the previous form of the invention, the roller 30 being carried by the arm 20, which is secured to the shaft 51 as in the previously explained form.

The sections 56 of the ring 55 are normally pressed inward to decrease the diameter of the ring, through the action of springs 65, which are mounted on the rods 50, the inner ends of these rods extending through to the inside of the ring and forming interrupter points 66, for contact with the roller 30 so as to break the circuit and cause the spark. In other respects, the construction and operation of the invention is similar to the form previously described and it is not thought necessary to repeat the same.

Various changes in the form, proportion and minor details of construction may be made and the right is reserved to make such changes as will fall within the scope of the claims hereto appended.

Having described the invention, what is claimed is:

1. A commutator embodying a longitudinally movable rotatable shaft, an electric circuit, an element associated with said shaft for rotation therewith and controlling said circuit, said arm being capable of lateral movement with respect to the shaft,—interrupter points located in the path of movement of said element for creating a spark and means including a wall of varying diameter for permitting a longitudinal and lateral movement of said element for advancing or retarding the spark.

2. A commutator embodying a longitudinally movable rotatable shaft, an electric circuit, an element associated with the shaft for rotation therewith, said element controlling said circuit, interrupter points located in the path of movement of said element for creating a spark and means including an in-

clined wall for permitting the shifting of said element through the longitudinal movement of the shaft for advancing or retarding the spark.

3. A commutator embodying a longitudinally movable rotatable shaft, an arm secured thereto, a spring controlled lever having one end pivotally secured to said arm, a spring pressed element pivotally secured to the opposite end of said lever, an electric circuit, interrupter points located in the path of movement of said element for interrupting the circuit for creating a spark and means whereby the arm may be moved laterally with respect to the shaft upon longitudinal movement of the latter for advancing or retarding the spark.

4. A commutator embodying a vertically movable rotatable shaft, an arm secured thereto, a lever having one end pivotally secured to said arm, a pivoted element carried by said lever, a single spring secured to the lever for urging the latter and the pivoted element away from said shaft, an electric circuit, interrupter points located in the path of movement of said element for interrupting the circuit to create a spark and means whereby the arms may be moved laterally with respect to the shaft upon longitudinal movement of the latter for advancing or retarding the spark.

5. In a commutator, a rotatable shaft, an electric circuit, spaced interrupter points, an arm rigidly secured to said shaft and rotatable thereof, an arm having one end pivotally secured to the first mentioned arm, a lever pivotally secured to the opposite end of the second mentioned arm and adapted to engage the spaced interrupter points, a circuit breaker included in said circuit and interposed between the first and second mentioned arms and spring actuated means for normally closing the circuit breaker and holding the second mentioned arm in position for engagement with the interrupter points.

6. In a commutator, a rotatable shaft, an electric circuit, spaced interrupter points, an arm rigidly secured to said shaft and rotatable therewith, an arm having one end pivotally secured to the first mentioned arm, a lever pivotally secured to the opposite end of the second mentioned arm and adapted to engage the spaced interrupter points, a circuit breaker included in said circuit and interposed between the first and second mentioned arms and a common spring actuated means for normally closing the circuit breaker and holding the second mentioned arm in position for engagement with the interrupter points.

In testimony whereof I affix my signature.

WILLIAM H. PITTS.

R. S. SMITH.

MAGNETO GENERATOR.

APPLICATION FILED SEPT. 2, 1916.

1,291,216. Patented Jan. 14, 1919.

5 SHEETS—SHEET 1.

Fig. 1.

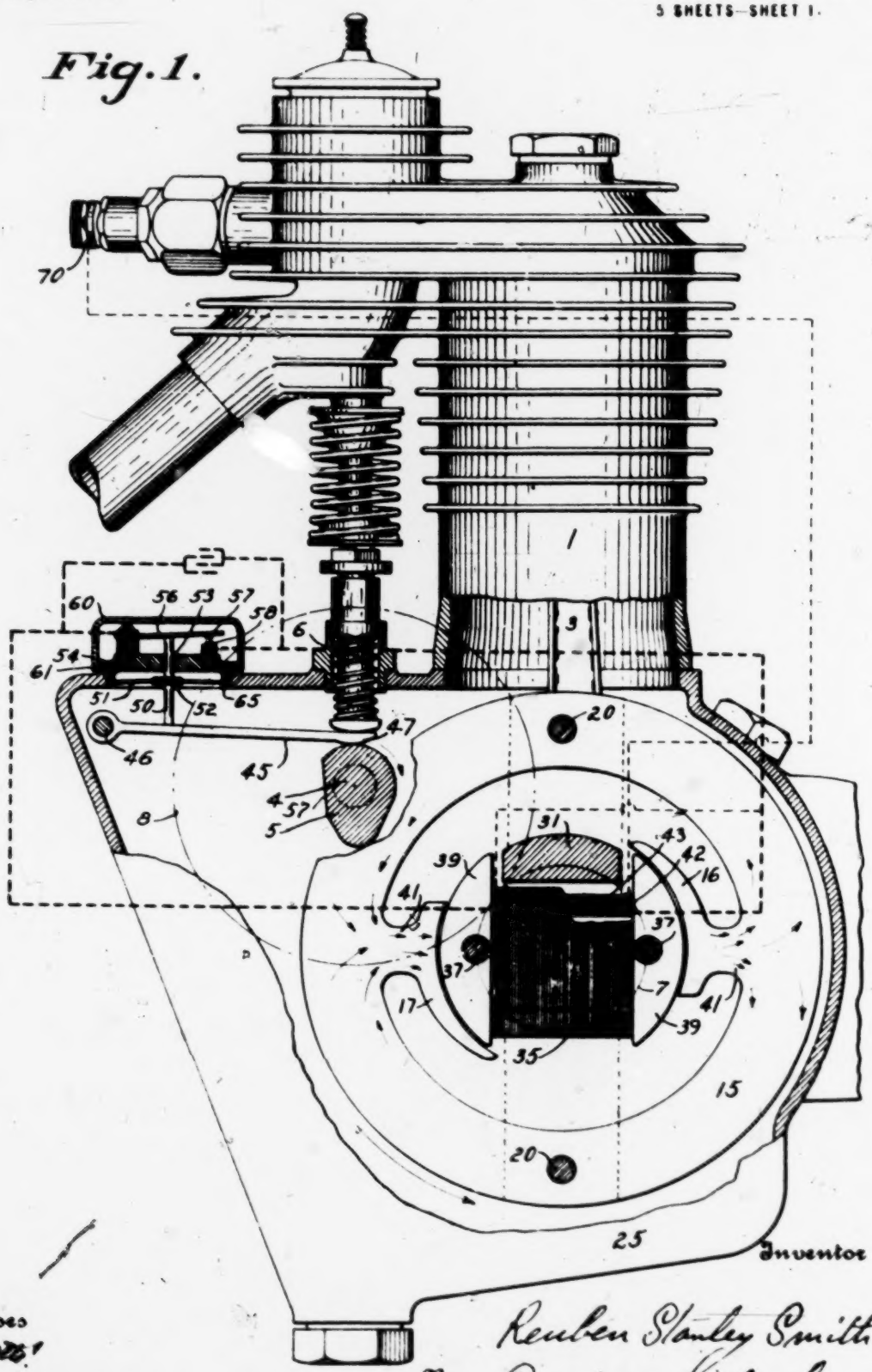

Witnesses

Fact!

J. L. Wheeler

Inventor

Reuben Stanley Smith

By Erwin & Wheeler

Attorneys

R. S. SMITH.

MAGNETO GENERATOR.

APPLICATION FILED SEPT. 2, 1916.

1,291,216.

Patented Jan. 14, 1919.

5 SHEETS—SHEET 2.

Fig. 2.

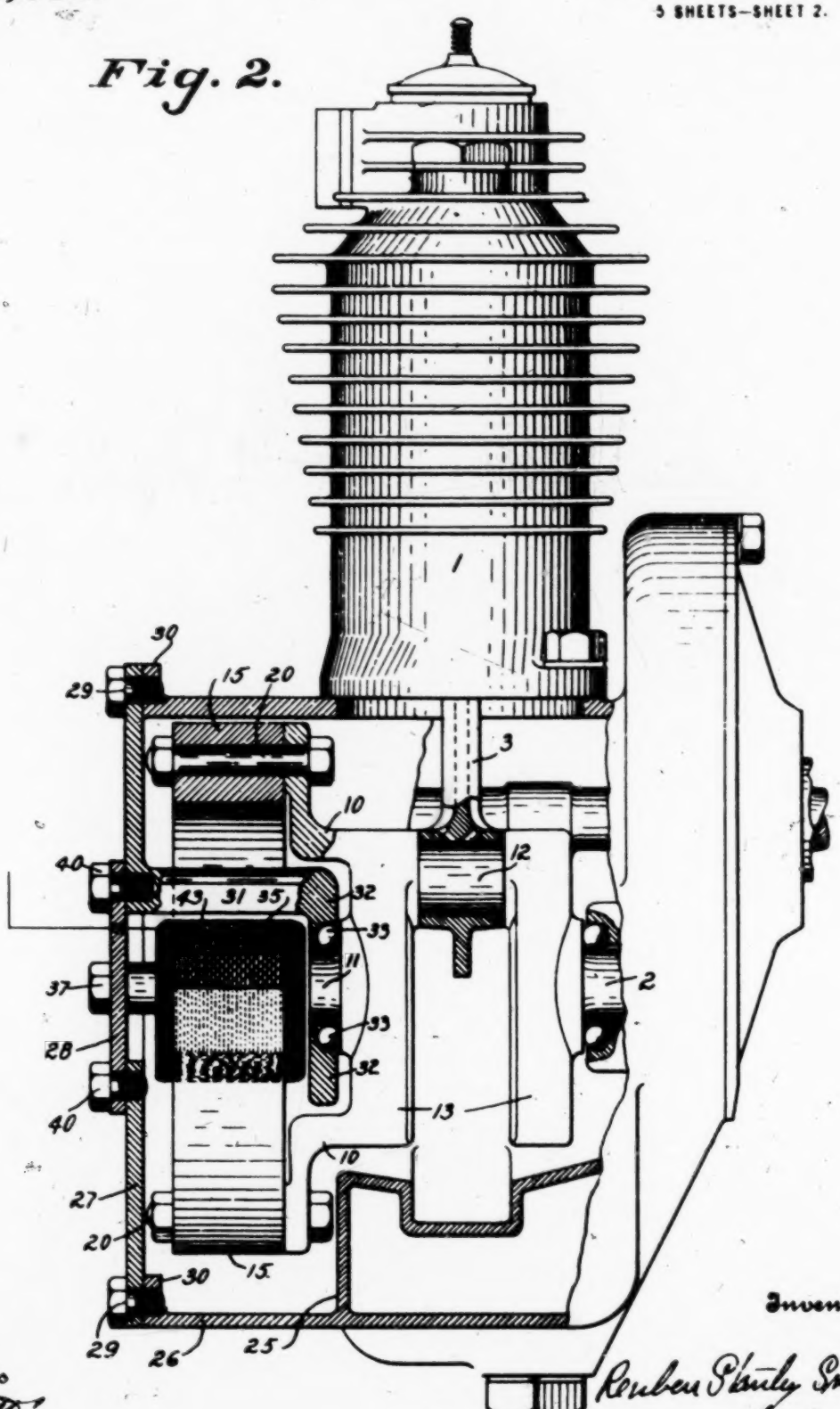

Witnesses

S. L. Wheeler

Inventor

Reuben Stanley Smith

By Esterly & Wheeler

Attorneys

R. S. SMITH.

MAGNETO GENERATOR.

APPLICATION FILED SEPT. 2, 1916.

1,291,216.

Patented Jan. 14, 1919.

3 SHEETS—SHEET 3.

Fig. 3.

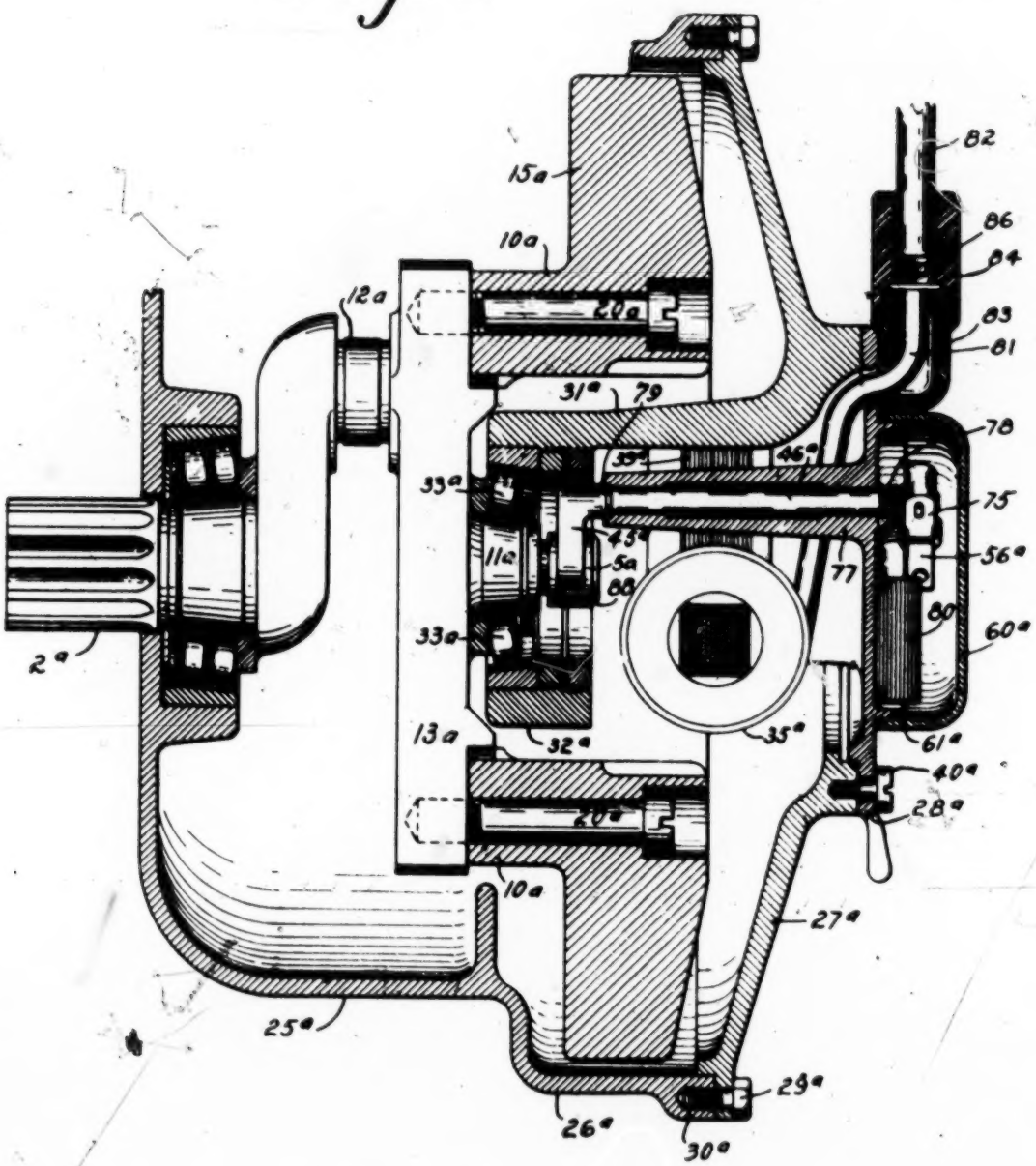

Inventor

Witnesses

S. L. Wheeler

Reuben Stanley Smith

By Erwin & Wheeler

Attorneys

R. S. SMITH.

MAGNETO GENERATOR.

APPLICATION FILED SEPT. 2, 1916.

1,291,216.

Patented Jan. 14, 1919.

5 SHEETS—SHEET 4.

Fig. 5.

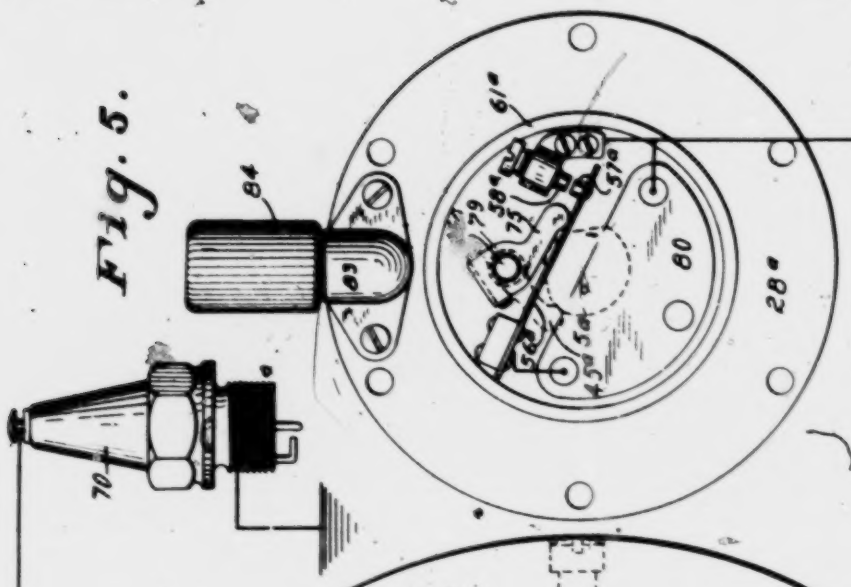

Fig. 4

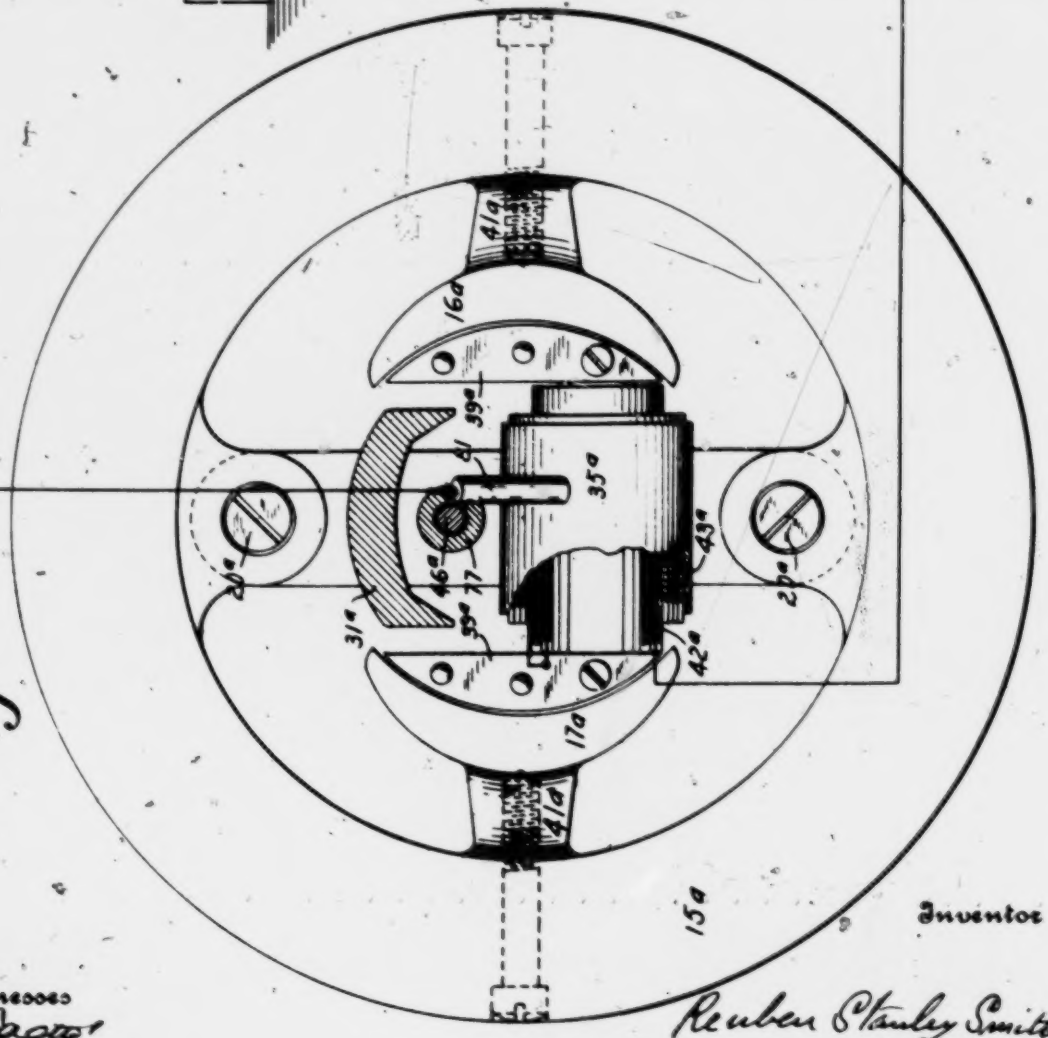

Witnesses

Jacob

S. L. Wheeler

Inventor

Reuben Stanley Smith

By Edson G. Wheeler

Attorneys

R. S. SMITH.
MAGNETO GENERATOR.
APPLICATION FILED SEPT. 2, 1916.

1,291,216.

Patented Jan. 14, 1919.

5 SHEETS-SHEET 5.

Fig. 6.

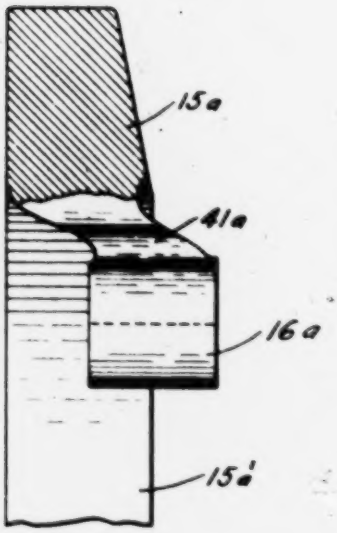

Fig. 7.

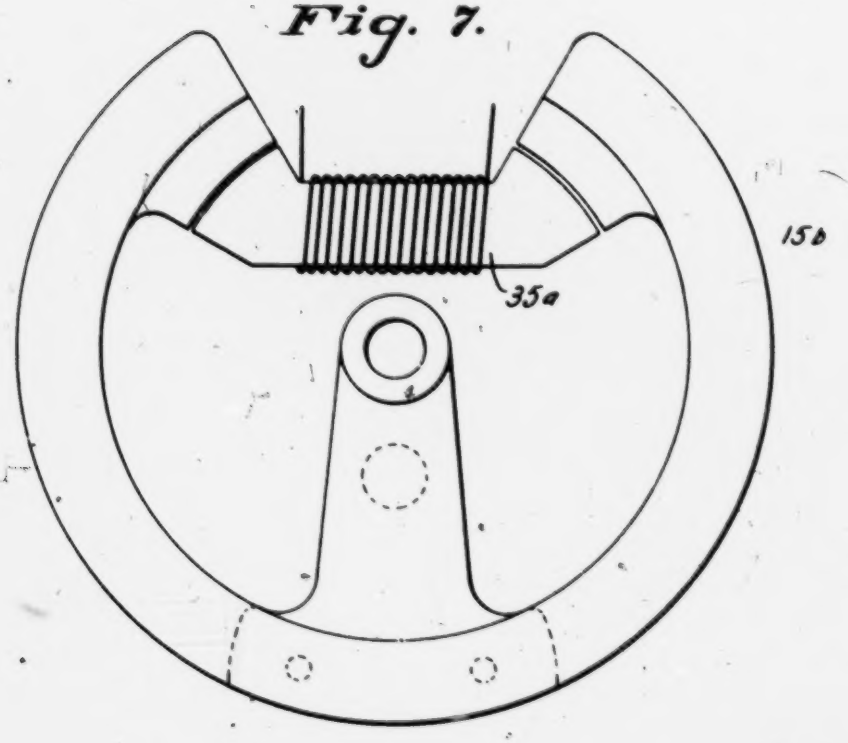

Witnesses
[illegible]
[illegible]

Inventor
Reuben Stanley Smith
By Evans & Wheeler
Attorneys

UNITED STATES PATENT OFFICE.

REUBEN STANLEY SMITH, OF MILWAUKEE, WISCONSIN.

MAGNETO-GENERATOR.

1,291,216. Specification of Letters Patent. Patented Jan. 14, 1919.

Application filed September 2, 1916. Serial No. 118,177.

To all whom it may concern:

Be it known that I, REUBEN STANLEY SMITH, citizen of the United States, residing at Milwaukee, county of Milwaukee, and State of Wisconsin, have invented new and useful Improvements in Magneto-Generators, of which the following is a specification.

My invention relates to improvements in magneto generators, with particular reference to generators of that type in which the field revolves about a stationary armature.

Magneto generators of this type are usually embodied in small units in which it is greatly desirable that all of the parts should be compact, durable, and inexpensive. The object of my invention is therefore to not only secure these characteristics to the fullest possible extent but to also eliminate all unnecessary weight and to secure increased reliability in operation.

I propose to attain these objects in part by employing a circular field magnet composed of a continuous ring of permanently magnetic material, having interior polar projections on diametrically opposite sides thereof, (either integrally formed or otherwise), and supporting this ring directly from a set of fork arms connected with the crank shaft of the driving motor, with the arms secured to the ring substantially midway between the polar projections. The ring is magnetized to establish or constitute these projections as the poles and therefore the middle points between these projections are the neutral points to which the supporting arms may be secured without disturbing or weakening the magnetic field. By employing an integral continuous ring, the rotary member is better able to resist the strains developed by centrifugal force, and I therefore prefer it, although my invention contemplates also the use of a ring divided into segments having their ends secured to the pole pieces if desired. The continuous ring is also less expensive, particularly if the polar projections are integral.

I also propose to provide a form of construction in which a stationary armature may be supported from the engine frame and this support utilized to provide an end bearing for the crank shaft, said support extending through the rotary field ring in such a manner as to leave room for a stationary armature and so arranged as to avoid any impairment of energy such as might result from diversion of the lines of force, or the development of electrical currents in the support. By providing an extension of the crank casing with a bracket arm projecting around the rotating field and through the ring from the side opposite that at which the crank is located, I am enabled to bring the generator into close proximity to the crank and to produce a compact, well balanced and durable structure, reducing the number of parts and cost of manufacture to a minimum.

I also propose to secure increased reliability by providing a circuit breaking mechanism which is located and operated within an inclosure which not only excludes dust, oil, or other foreign matter from the contacts, but also protects the parts from injury. This feature is important for large units but it is also of especial importance for small units and particularly so where my invention is applied to motor driven vehicles or other portable devices.

In the drawings—

Figure 1 is a side elevation of an internal combustion engine structure with portions of the casing broken away in vertival section to expose the operating parts of my improved magneto generator.

Fig. 2 is a front elevation, partly in vertical section, drawn generally to a plane which includes the longitudinal axis of the crank shaft, the latter, however, being illustrated in full.

Fig. 3 is a detail view in vertical section exposing the crank shaft, and the connecting bolts of the field ring, and showing a modified form of construction.

Fig. 4 is a diagram of the same showing the relation of the armature to the field ring and spark plug and also showing the supporting arm of the crank shaft bearing ring in cross section.

Fig. 5 is a detail view of the outer face of the armature supporting cap showing the circuit breaker.

Fig. 6 is a fragmentary view of the field and one polar projection showing the latter in its offset relation to the ring.

Fig. 7 is a detail showing a modified field magnet.

Like parts are identified by the same reference characters throughout the several views.

Figs. 1 and 2 show my invention as applied to a four cycle internal combustion en-

gine of which 1 is the cylinder, 2 the crank shaft, 3 the pitman rod, 4 and 5 the cam shaft and cam, respectively, for actuating the exhaust valve, 6 the valve actuating rod and 7 and 8 the gear members for transmitting motion from the crank shaft to the cam shaft.

The crank shaft 2 is provided with a set of arms 10 to support the magnetic field ring. These arms are preferably elbowed and comprise integral extensions of the crank 12 and the oppositely disposed balancing arm 13. Being formed of steel, they are adapted to rigidly support a magnetic ring 15 in close proximity to the crank, but slightly offset longitudinally. The ring 15 is continuous and is provided with interior polar projections 16 and 17. The magnetic circuit is indicated by the arrows. I have discovered that it is not necessary to employ brass rings or other non-magnetic supports with segmental magnets mounted therein as has heretofore been customary, for if the continuous ring is so magnetized as to establish the poles in the projections 16 and 17, the portions of the ring midway between these poles are magnetically neutral, and the bolts 20 may be passed through these neutral points and the ring secured directly to the steel shaft arms without affecting the magnetic field. The ring being integral, it is also adapted, in itself, to perform the function of a fly wheel.

The crank case 25 has a cylindrical extension 26 provided with a removable disk shaped end wall 27, the latter being preferably centrally apertured and provided with a removable cap 28. The end wall 27 is directly bolted at 29 to an annular flange 30 on the extension 26. An arm 31 extends from the end wall 27 inwardly toward the crank shaft and supports a ring 32 at its inner end which provides a bearing for the tapered end 11 of the crank shaft, anti-friction balls or rollers 33 being preferably employed. A single arm is preferably employed in order to avoid the development of induced currents in the support or a diversion of the lines of magnetic force.

A stationary armature 35 is supported from the cap 28 by bolts or rivets 37 which are threaded or secured into the armature heads 39 as shown. The armature core is preferably offset from the center line between the head pieces 39 whereby space is provided at one side of the core and its winding to allow the arm 31 to pass between these parts and the circular path of the field pole pieces or projections 16 and 17. The armature being wholly supported from the cap 28, it is obvious that by removing the bolts 40, which connect this cap to end wall 27, the armature may be removed with the cap without disturbing any other portion of the mechanism.

It will be observed that the segmental portions of the polar projections 16 and 17 are connected with the ring 15 by neck portions 41. But the neck portions are located near the rear ends of the segments, *i. e.* near that end which is last to leave the armature head, whereby the magnetic field will be intensified and the lines of force will be concentrated in the shortest possible path at the time of breaking the circuit.

The general arrangement of the circuit conductors including the primary and secondary armature windings 42 and 43, is similar to that adopted in ordinary practice, but the circuit breaker is constructed and operated as follows. The circuit breaker operating lever 45 is pivoted to the casing at 46 and has an arm provided with head 47 interposed between the cam 5 and valve actuating rod 6 which operates the exhaust valve of the engine. The other end of this lever 45 is in a position to engage and actuate a circuit breaking pin 50 supported from the crank casing by a resilient diaphragm 51. The pin 50 extends through and is clamped to this diaphragm at 52. The upper end of the pin also projects through aperture 53 in a removable cap nut 54 forming a part of the wall of the casing, the upper end of the pin being in position to engage and actuate a resilient circuit closing arm 57 and thereby raise its terminal electrode 57 out of normal position of contact with the fixed terminal 58, thereby breaking the primary circuit of the armature. A dust tight casing 60, preferably having the form of an inverted cup, is secured to a projecting tubular boss 61 on the crank casing, the cap nut 54 being screwed to the interior wall of said boss. The casing 60, the boss 61, and the diaphragm 51 form an oil tight chamber in which cap nut 54, the upper end of the circuit breaking pin 50, the resilient arm 56, and contact members 57 and 58 are located. It will be observed that the diaphragm 51 is clamped between cap nut 54 and the interior annular shoulder 65 formed on the wall of the crank casing at the base of the boss 60. Therefore, by removing casing member 61, access may be had to the contact terminals, after which cap nut 54 may be removed to permit removal of diaphragm 51 and pin 50.

The head 47 of lever 45 is held to the cam 5 by the spring actuated valve rod 6. The cam holds the lever 45 in actuating relation to the pin 50 during all stages of cam revolution except during the short interval when head 47 registers with and enters cam depression 57, at which time the lever head 47 is depressed sufficiently under downward pressure exerted by valve rod 6 to allow pin 50 to move downwardly until arm 56 reaches circuit closing position, with members 57 and 58 in contact. This closes the primary circuit of the magneto, and this circuit is

again broken by the cam preparatory to a reversal of the magnetic flux. Sufficient current will thus be induced in the secondary winding to operate a jump spark igniter in the usual manner, the engine cylinder being provided with an ordinary igniter plug at 70.

In the modification shown in Figs. 3, 4, and 5, the same reference characters are applied to the corresponding parts as in Figs. 1 and 2 but with the letter a added. In this construction, it will be observed that a balancing arm 13ª is employed on only one leg of the crank 12ª; also that instead of the elbowed arms 10, shown in Fig. 2, I have provided the magnetic ring 15ª with projecting spacing studs 10ª located at the neutral points and through which the connecting bolts 20ª may pass. The ends of the spacing studs abut directly against the crank and the spacing arm 13ª, respectively.

The magnetic ring 15ª is a complete or continuous ring and, as in Figs. 1 and 2, it requires no brass or other nonmagnetic mounting either to support it against centrifugal force, or to connect it with the actuating shaft. The polar projections 16ª and 17ª have necks 41ª detachably connected with the ring. The polar projections are segmental and the neck portions 41ª are centrally located instead of being located near one end of the segment as illustrated in Fig. 1.

The principal distinction, however, between the construction illustrated in Figs. 3, 4, and 5 and that illustrated in Figs. 1 and 2, is in the structure and arrangement of the circuit breaker. It will be observed that a cam 5ª is mounted upon the inclosed end of the crank shaft shown in Fig. 3, this cam being mounted upon the axial projecting portion of the shaft extending beyond the tapered portion 11ª which forms a cone having bearing rollers 33ª. A circuit breaking arm 56ª (Fig. 5) is mounted upon the outer face of the cap plate 28ª and carries a contact member 57ª in position for contact with the terminal electrode 58ª. Motion is transmitted periodically from the cam 5ª to actuate the resilient circuit breaking arm 56ª through the arm 45ª rocking shaft or rod 46ª and arm 75, the latter being located on the outer end of the rocking shaft 46ª in a position to engage and actuate a circuit breaking arm 56ª as best illustrated in Fig. 5. The rocking shaft 46ª has its bearings in arm 77 which projects inwardly from the cap 28ª underneath arm 31ª. The coiled spring 78 (Fig. 3) is arranged to oscilliate the shaft 46ª in a direction to retract arm 75 from the circuit breaking arm 56ª and also in a direction to hold the shaft arm 45ª in contact with the cam surface. It also holds rock shaft 46ª with its conically tapered shoulder 79 against the correspondingly tapered seat at the inner end of arm 77. The cam projection will periodically actuate the arm 45ª in the opposite direction, this motion being transmitted to cause arm 75 to swing into contact with and actuate arm 56ª to circuit breaking position. 80 is a condenser also mounted upon the cap plate 28ª, this being inclosed with circuit breaker and arm 75 by housing 60ª screwed to the projecting flange 61ª to form an oil tight, dust-excluding casing. The secondary armature coil 43ª has one end connected with the spark plug 70 by contacting wire extending through the conduit members 81 and 82. This conduit passes through supporting sleeve members 83 and 84, having screw threaded connection with each other and adapted to contain coupling fuse at 86.

The principle of operation of the modified structure is the same as that of the structure shown in Figs. 1 and 2, but in the construction illustrated in Figs. 3, 4, and 5, only the alternate igniting sparks will be utilized when connected with a four-cycle engine, since the circuit will be broken once for each revolution of the crank shaft, but this involves merely the waste of the intermediate sparks and the loss of energy is negligible. It will also be observed that in the structure shown in Fig. 3, the circuit breaker, together with the rocking shaft 46ª and its arms 45ª and 75, may be removed with the cap 28ª which also supports the armature. By removing the housing 60ª, access may be readily had to all portions of the circuit breaker and also to the armature when the cap 28ª is removed. The bearing ring 32ª together with the cam 5ª, the bearing rollers 33ª, etc., will all be exposed through the opening in the casing which is normally covered by said cap 28ª, but owing to the fact that the armature and the circuit breaking mechanism are removed with the cap, it is obvious that this portion of the crank chamber will be unobstructed and access to the crank shaft bearing will therefore be facilitated. The outer face of the cam number 5ª is beveled or conically tapered as shown at 88, whereby when the cap 28ª is replaced, arm 45ª will be pushed outwardly until it moves upon the curved outer surface of the cam.

In Fig. 3, the cap 28ª is shown adjustably mounted on the casing wall and held by a set screw 40ª. This allows a turning adjustment of the armature. Comparing Fig. 3 with Fig. 6, it will be observed that the segmental polar projections 16ª and 17ª are offset from the ring 15ª, whereby they travel a circular path concentric with the circle which includes the armature heads.

Referring to Fig. 7, it will be observed that I have illustrated a field ring 15ᵇ of what may be called the horse-shoe type, the ring being a split ring with polar projections on opposite sides of the gap, adapted

for simultaneous registry with the respective armature heads during the rotation of the ring. In this construction, the neutral point is diametrically opposite the gap in the ring and therefore the ring will be attached at this point to the crank. In this form of construction, the ring will have only one point of support instead of two, as illustrated in the other views, and this connection may be made either with the crank or the balancing arm.

I claim—

1. A magneto generator including the combination with a rotary shaft, of a ring composed of magnetic material provided with oppositely disposed polar projections and adapted by its continuity to resist centrifugal strains and to perform the function of a fly wheel, arms on the shaft directly connecting the shaft with the ring at points substantially midway between the polar projections, and adapted to support and actuate the ring, and an armature located in current generating relation to the ring.

2. The combination with a driving motor crank shaft, of a fly wheel wholly composed of magnetic materi l and having its peripheral portion connected at its magnetically neutral points with the crank shaft, segmental pole pieces connected with the wheel rim substantially midway between said neutral points, and a relatively stationary current generating armature having its heads in proximity to the circle described by said pole pieces.

3. The combination with a driving motor crank shaft, of a rotary annular field magnet supported from one end portion thereof, a stationary support, a bearing member for the crank shaft, an arm connected with said support and projecting inwardly through the space encircled by the field magnet and connected with the bearing member to support the latter, and a current generating armature in operative relation to the field magnet.

4. In a magneto generator the combination with an armature, of a unitary homogeneous rotor, comprising a shaft, shaft arms, and a field magnet, all of magnetizable material, the field magnet having permanently established magnetic poles, and being secured directly to the shaft arms at its magnetically neutral points and supported thereby in current generating relation to the armature.

5. A magneto generator including a rotor wholly composed of magnetizable material and comprising a shaft and a field magnet having permanently established magnetic poles, and wholly supported from the shaft through a magnetically neutral point in the field.

6. The combination with a driving motor crank shaft, of a rotary annular field magnet secured to one end portion thereof, an inclosing housing provided with an end cap and a current generating armature secured to said cap and supported thereby within the circle described by the field magnet.

7. The combination with a driving motor crank shaft, of a rotary annular field magnet secured to one end portion thereof, of an inclosing housing therefor having a removable end wall provided with an aperture, an arm secured to said wall and projecting inwardly through the annular field magnet, a bearing member for the crank shaft, carried by said arm, a removable cap for the end wall aperture and an armature supported by said cap within the rotary field.

8. In a magneto generator the combination with a permanently magnetic rotary field having definitely fixed poles, of a relatively stationary armature in current generating relation to the field, and a magnetizable support adapted to actuate the field through a neutral point substantially midway between its poles.

9. In a magneto generator, the combination with an actuating shaft, of a rotary annular field ring provided with interiorly projecting pole pieces, an armature having segmental heads in proximity to the circle described by said pole pieces at diametrically opposite points and having the axis of its core and winding therefor offset from the center of said ring, and a bearing for said shaft having a supporting arm connected with a relatively stationary support and projecting through the space between the armature winding and the ring and between the armature heads.

10. In a magneto generator, the combination of a rotary annular field ring having interiorly projecting segmental pole pieces, a current generating armature located within the circle described by the pole pieces, each pole piece being supported from the field ring by a neck portion located near the rear end of the segment, and a circuit breaker arranged to break the circuit of the armature when the magnetic field is substantially at maximum intensity.

11. The combination with an internal combustion engine provided with an igniter plug and crank shaft, of a permanently magnetic field ring secured by an arm of magnetizable material at a magnetically neutral point to the crank shaft, and an armature supported from the engine frame within the magnetic field of said ring and having a winding operatively connected to the igniter plug.

12. The combination with an internal combustion engine provided with an igniter and a crank shaft provided with a crank and an oppositely projecting balancing side arm, of a permanently magnetic field ring secured to said balancing arm and one side

arm of the crank, interior polar projections on said ring substantially mid-way between said points of connection, and a relatively stationary armature within the magnetic field of the ring and operatively connected with the igniter.

13. The combination with an internal combustion engine provided with an igniter and a crank shaft provided with a crank and an oppositely projecting balancing side arm, of a permanently magnetic field ring secured to said balancing arm and one side arm of the crank, interior polar projections on said ring substantially mid-way between said points of connection, and a relatively stationary armature within the magnetic field of the ring and operatively connected with the igniter, said armature having a plurality of windings, one being in circuit with the igniter, and the other constituting a primary circuit and provided with means controlled by the engine for periodically breaking such circuit.

14. The combination with an internal combustion engine, having a crank shaft provided with a balancing arm, of a magnetic field ring secured at its neutral points to said arm and one arm of the crank respectively, a housing for said ring, having a projection extending therethrough, a bearing for the crank shaft carried by said housing projection, an armature detachably supported from the housing within the ring, and an igniter and a circuit breaker each in circuit with said armature.

15. The combination with a driving shaft, of a magnetic field ring supported therefrom, an inclosing casing for the ring and shaft provided with a removable end cap, and a relatively stationary armature supported by the cap.

16. In a magneto generator, provided with an inclosing casing, the combination with such casing of a removable wall portion and an armature secured thereto.

17. In a magneto generator provided with an inclosing casing, having a removable portion, an armature secured to said removable portion of the casing and circuit breaking mechanism also secured thereto and removable therewith.

18. In a magneto generator the combination with a field magnet, of a support composed of magnetizable material directly connected with the field magnet at a magnetically neutral point.

19. An integrally continuous ring connected with a rotary support and adapted to serve as a fly wheel, said ring being magnetized to constitute poles on opposite sides of the connection with the support, said point of connection constituting a magnetically neutral point.

20. The combination with a driving motor crank shaft and supports therefor, of an annular field magnet having permanently established magnetic poles and carried by and rotating with the crank shaft, the crank shaft and the magnet being connected at a neutral point of the latter, and a current generating armature in operative relation to the field magnet.

In testimony whereof I affix my signature in the presence of two witnesses.

REUBEN STANLEY SMITH.

Witnesses:

LAWRENCE C. WHEELER,

J. J. STAMM.

A. ERICKSON.

IGNITION APPARATUS.

APPLICATION FILED NOV. 19, 1919.

1,401,058. Patented Dec. 20, 1921.

2 SHEETS—SHEET 1.

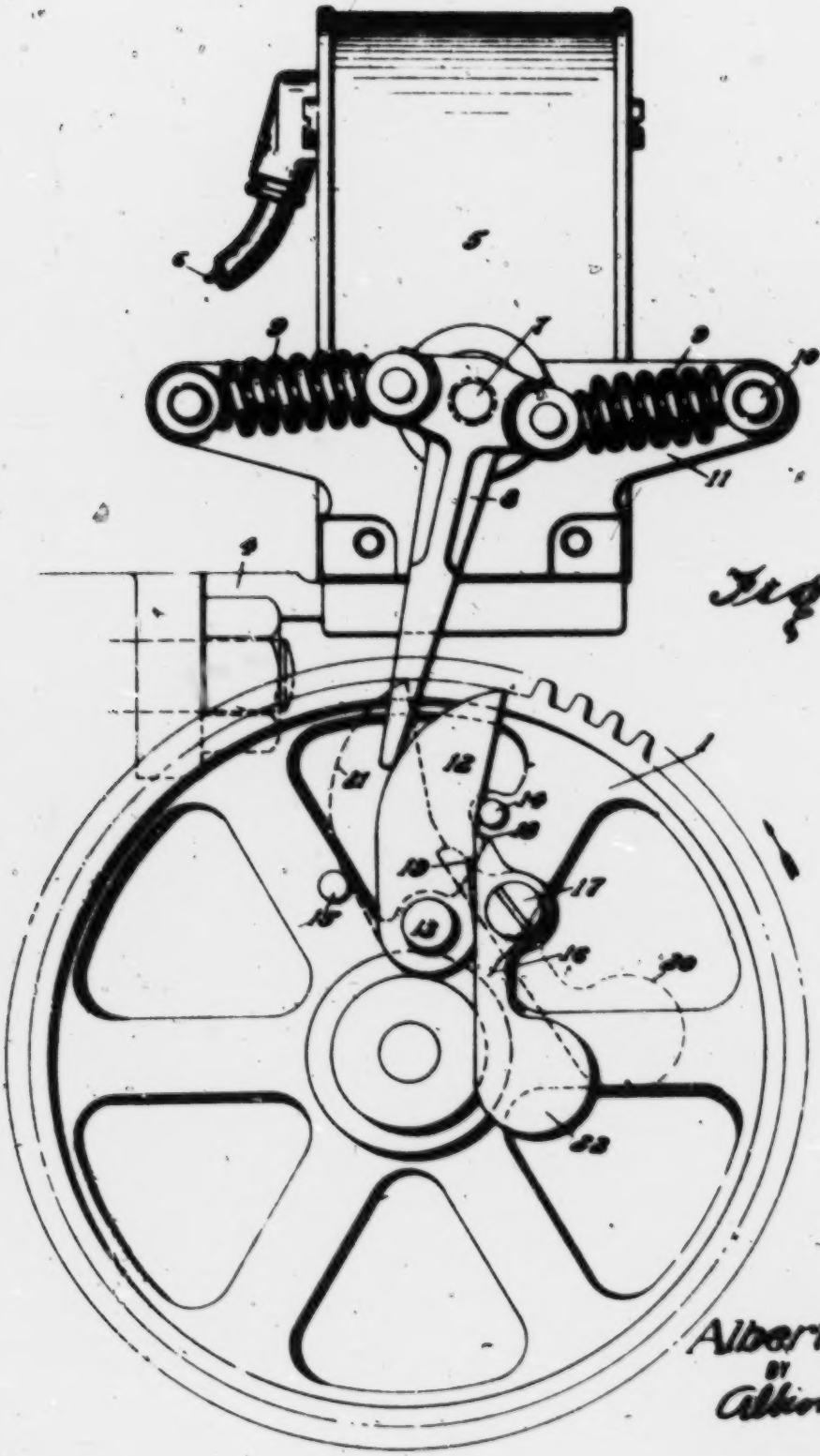

Fig-1

INVENTOR

Albert Erickson

BY

Albion D. J. Libby

ATTORNEY

P-153

A. ERICKSON.

IGNITION APPARATUS.

APPLICATION FILED NOV. 19, 1919.

1,401,058.

Patented Dec. 20, 1921.

2 SHEETS—SHEET 2.

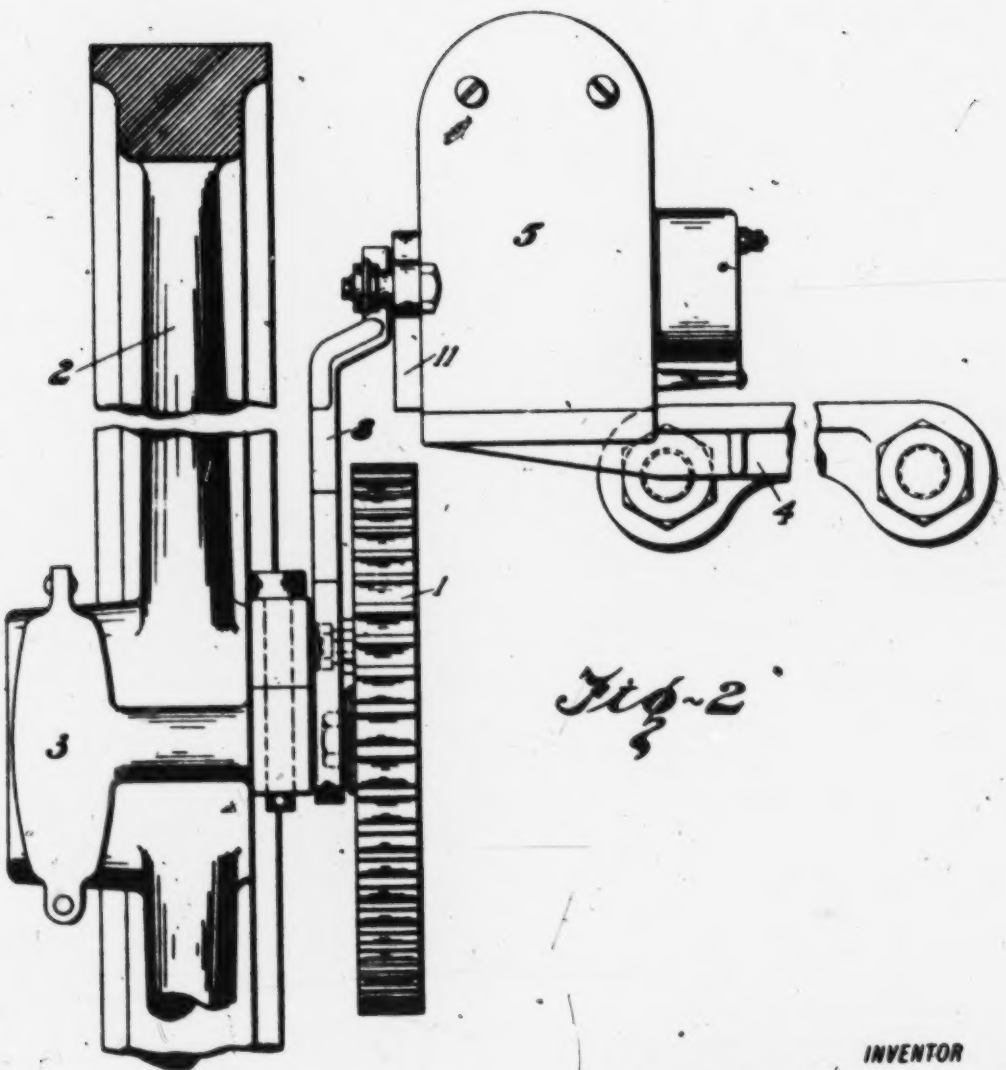

Fig-2

INVENTOR

Albert Erickson

BY

Albion F. Libby

ATTORNEY

UNITED STATES PATENT OFFICE.

ALBERT ERICKSON, OF CHICAGO, ILLINOIS, ASSIGNOR TO SPLITDORF ELECTRICAL COMPANY, OF NEWARK, NEW JERSEY.

IGNITION APPARATUS.

1,401,058. Specification of Letters Patent. Patented Dec. 20, 1921.

Application filed November 19, 1919. Serial No. 339,081.

To all whom it may concern:

Be it known that I, ALBERT ERICKSON, a citizen of the United States, residing at Chicago, in the county of Cook, State of Illinois, have invented certain new and useful Improvements in Ignition Apparatus, of which the following is a description, reference being had to the accompanying drawing and to the figures of reference marked thereon.

My invention relates to ignition apparatus in which the ignition generator is of the oscillating type and which supplies current to electrodes in an engine cylinder, one of which is adapted to be moved to introduce a spark gap substantially co-incident with the time of generation of maximum current by the ignition generator.

It is the principal object of my invention to provide a generator which will deliver its maximum current at a suitable time with reference to the position of the engine piston. In magnetos of the oscillating type with which I am familiar no good means have been provided for advancing the time of producing maximum current from the generator after the engine has been started. It is the usual practice to start a stationary engine with the spark occurring beyond "dead" center; that is to say, in retard position.

Certain attempts have been made to shift the position of the spark after the engine has been started manually but on account of the method of connection of an oscillating type magneto to the engine, it is not easy to do this automatically. It is, therefore, another object of my invention to provide a simple, inexpensive means of advancing the spark automatically after the engine has been started.

Other and further objects will be apparent to one skilled in the art after a study of the specification and the annexed drawings, wherein—

Figure 1 is a view of a portion of the engine showing an engine driven member in operative relationship to the ignition generator.

Fig. 2 is a partial view of the ignition generator and certain engine members.

In the drawings, 1 illustrates an engine driven member which, in the case at hand, is the cam shaft gear mounted adjacent the flywheel 2, 3 being a governor associated with the parts 1 and 2 for governing the throttle of the engine. Carried on a bracket 4 is an ignition generator 5. An electrical conductor 6 extends from generator 5 to an insulated electrode in the engine cylinder. These electrodes are not shown as they form no part of my invention and are well understood in their construction and operation and will, therefore, not be referred to in detail herein. The generator 5 has a shaft 7 which operates a rotatable member for the generation of electrical current. Fastened to the shaft 7 is a trip lever 8. Associated with the trip lever 8 are springs 9, having one end attached to an arm of the trip lever, and the other end attached to a suitable bearing 10, preferably carried on a bracket 11 fastened to the ignition generator. Carried on the engine driven member 1 is a cam member 12, the same being preferably supported on a pivotal bearing 13. A stop pin 14 limits the movement of the member 12 in one direction and the pin 15 limits its movement in the opposite direction. A pawl 16 is pivotally carried on the member 1 by pivot screw 17. The pawl 16 has a nose 18 adapted to engage the notch 19 in the member 12 when the pawl has moved to the dotted position indicated at 20, the member 12 then being in the position shown by dotted lines 21.

In operation, when the engine is being started the member 12 is in the position shown in full lines in Fig. 1 and as the member 1 turns in the direction of the arrow, the cam member 12 will act on the trip lever 8 to move the rotatable member of the generator 5 to a position which will tension the springs 9 and when the rotation of member 1 has proceeded far enough the trip member 8 will slip over the nose of the cam 12 and the springs 9 will rapidly return the rotatable member of the generator 5 to normal position, generating a relatively heavy current in the winding of the generator which current will be conveyed by conductor 6 to the spark plug or sparking electrodes that are operated by suitable engine mechanism (not shown) when a low tension generator is used. As soon as the engine comes up to its normal running speed the pawl 16, due to its weighted end 22, will move out to the position shown in dotted lines 20 pushing the cam member 12 to the position shown in dotted lines 21 and the nose 18

will engage the notch 19 thereby holding the cam member 12 in advanced position until the engine speed has dropped to a point considerably below normal.

It will be seen that I have provided a very simple and inexpensive mechanism to do this work and it will be apparent that various changes may be made in the details without departing from the spirit of my invention and the scope of the appended claims.

Having thus described my invention, what I claim is:—

1. An ignition generator for internal combustion engines, having a rotatable member for the generation of electric current, an oscillatory member secured thereto, rotary non-oscillatory means on the engine for intermittently engaging and moving said oscillatory member through a portion of a revolution and then releasing it, means for returning the oscillatory member to normal position after said release occurs, and means including a weighted pawl on said engine for automatically advancing said engine cooperating means for the purpose described.

2. An ignition generator for internal combustion engines, having a rotatable member for the generation of electric current, an oscillatory member secured thereto, rotary non-oscillatory means on the engine for intermittently moving said oscillatory member through a portion of a revolution and then releasing it, means for returning the oscillatory member to normal position after said release occurs, and means including a weighted pawl on said engine for automatically advancing said engine coöperating means and holding said coöperating means in advanced position during normal running of the engine.

3. In combination an ignition generator for internal combustion engines having a rotatable member for the generation of electric current, an oscillatory trip lever fastened to said rotatable member for rotating the same, a rotary non-oscillatory engine driven member, a member for intermittently engaging and actuating the trip lever carried on said engine driven member, spring associated with said lever for returning the trip lever and rotatable member after being actuated by said actuating member, and a weighted pawl operated by the engine for moving said actuating member to advanced position as described.

4. In combination an ignition generator for internal combustion engines having a rotatable member for the generation of electric current, a trip lever fastened to said rotatable member for rotating the same, an engine driven member, a cam for actuating the trip lever pivotally mounted on the engine driven member, springs associated with said trip lever set under tension by movement thereof, for quickly returning said trip lever and rotatable member after said trip lever has been released by said cam and a pawl carried on the engine member responsive to centrifugal force for moving the cam member to advanced position after the engine has been started.

5. In combination an ignition generator for internal combustion engines having a rotatable member for the generation of electric current, a trip lever fastened to said rotatable member for rotating the same, an engine driven member, a cam for actuating the trip lever pivotally mounted on the engine driven member, springs associated with said trip lever set under tension by movement thereof, for quickly returning said trip lever and rotatable member after said trip lever has been released by said cam and a pawl pivotally mounted on the engine member responsive to centrifugal force provided with means for automatically moving the cam to advance position after the engine has been started and for permitting the cam to return to retard position at a predetermined low speed of the engine.

6. In an ignition system, the combination of, an oscillating type of electric generator comprising a trip lever attached to the rotatable member of the generator and having springs for producing a quick impulse of the rotatable member after displacement and release thereof by the trip finger, a rotary non-oscillatory engine operated cam for actuating the trip lever and means responsive to the speed of the engine for advancing and holding the cam in an advance position during normal running of the engine.

7. In combination, an ignition generator for internal combustion engines having a rotatable member for the generation of electric current, a trip lever fastened to said rotatable member for rotating the same, an engine driven member, a cam for actuating the trip lever pivotally mounted on the engine driven member, springs associated with said trip lever set under tension by movement thereof, for quickly returning said trip lever and rotatable member after said trip lever has been released by said cam, a centrifugally responsive pawl pivotally mounted on the engine member and coöperative means on the pawl and cam member for moving the cam member to spark advanced position and for holding the cam member in such position, when the engine driven member has attained a predetermined angular velocity.

In testimony whereof, I affix my signature.

ALBERT ERICKSON.

P. BROWN.

ACTUATING MECHANISM FOR MAGNETOS.

APPLICATION FILED JUNE 25, 1920.

1,427,718. Patented Aug. 29, 1922.

2 SHEETS—SHEET 1.

Fig. 1.

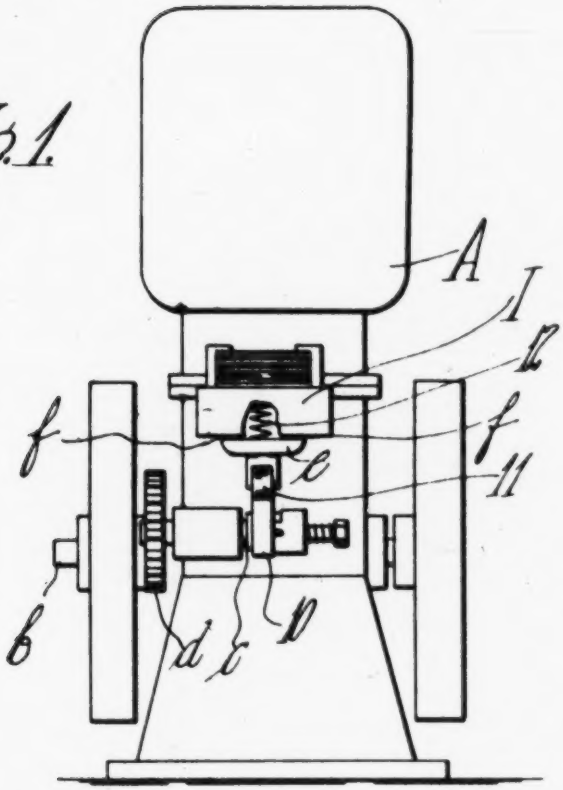

Fig. 2.

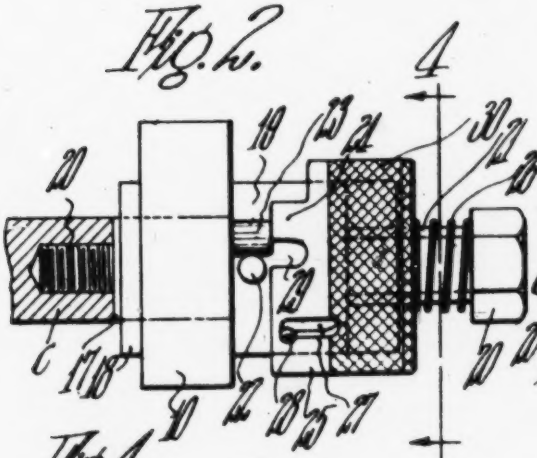

Fig. 3.

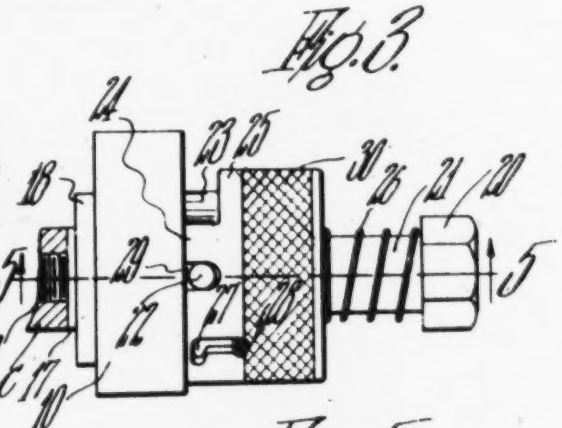

Fig. 4.

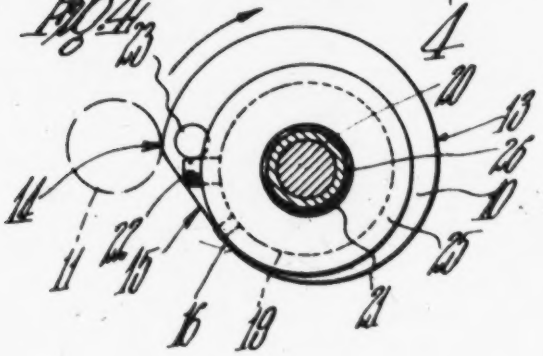

Fig. 5.

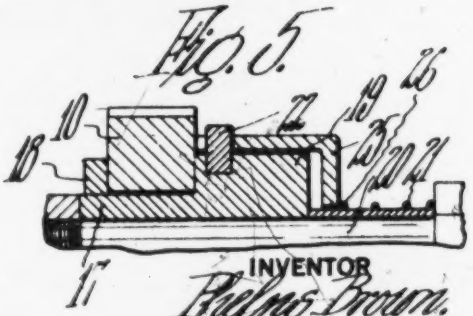

INVENTOR
Philip Brown.
BY Chapin & Neal
ATTORNEYS.

P. BROWN.

ACTUATING MECHANISM FOR MAGNETOS.

APPLICATION FILED JUNE 25, 1920.

1,427,718.

Patented Aug. 29, 1922.

2 SHEETS—SHEET 2.

Fig. 6.

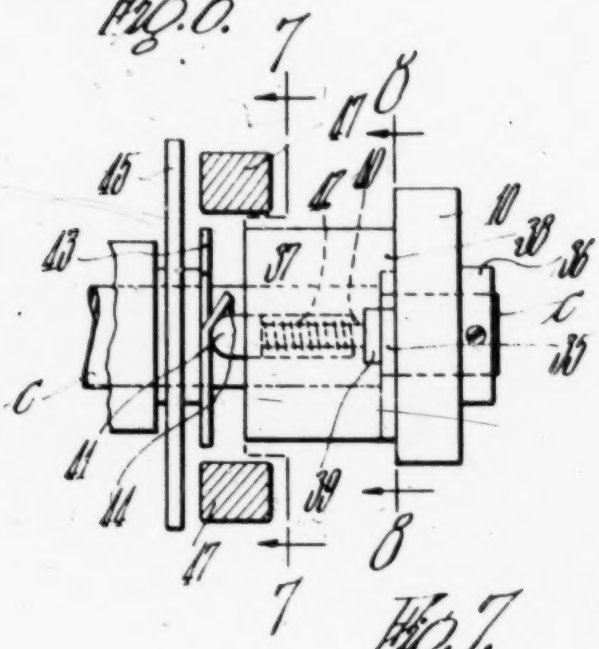

Fig. 8.

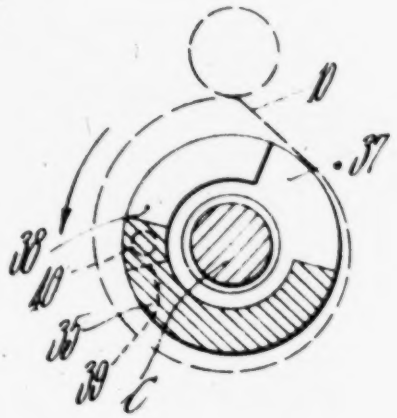

Fig. 7.

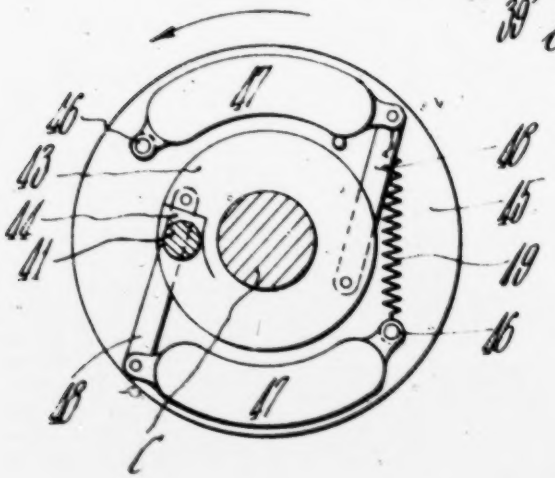

INVENTOR

Phelps Brown.

BY Chapin Neal

ATTORNEYS

UNITED STATES PATENT OFFICE.

PHELPS BROWN, OF SPRINGFIELD, MASSACHUSETTS.

ACTUATING MECHANISM FOR MAGNETOS.

1,427,718. Specification of Letters Patent. Patented Aug. 29, 1922.

Application filed June 25, 1920. Serial No. 391,712.

To all whom it may concern:

Be it known that J. PHELPS BROWN, a citizen of the United States, residing at Springfield, in the county of Hampden and State of Massachusetts, have invented new and useful Improvements in Actuating Mechanism for Magnetos, of which the following is a specification.

This invention relates to the driving or actuating mechanism of magnetos and, more particularly, to magnetos of the reciprocatory armature type.

While the invention is capable of general application, it finds one advantageous use in magnetos of the general character disclosed in U. S. Letters Patent No. 1,307,343, granted to me on June 24, 1919. The invention disclosed in such patent is directed, among other things, to improved means for moving the armature to and from the cores of the magnetos, which means are characterized in that they eliminate, to a large degree, the noisiness of operation heretofore incident to magnetos of the reciprocatory armature type. That is to say, the actuating means is designed with a view to avoiding the noise-producing sharp blows and impingements hitherto common in, and considered essential to the commercial success of, magnetos of this particular character. This invention is directed, among other things, to the same general problem.

An object of this invention is to provide improved driving means, in the nature of a cam, for moving the armature toward the cores of the magneto and subsequently releasing it for more rapid movement away from the cores, characterized in that the cam permits the armature to descend with relative rapidity but without the usual attending noise.

According to this object, the cam is of such contour as to gradually move the armature in one direction but is not, as is usual, provided with a sharp "let off" portion which allows the armature, and the cam follower which it engages, to fall freely and acquire considerable momentum before its fall is checked by a noise producing impingement. Rather, the cam has a relatively gradual fall, like an inclined plane, and is permitted to slip on its driving shaft in the direction of rotation. The arrangement is such that, after the high point of the cam passes under the cam follower, the pressure of the latter on the inclined plane forces the cam ahead very rapidly on its driving shaft and thereby accomplishes the desired relatively rapid descent of the cam follower without the undesirable noise usually incident to the rapid descent.

More particularly, it is an object of the invention to provide a cam, of the character described, which is loosely mounted on its drive shaft and can be driven by the engagement of an abutment on one with an abutment on the other, whereby the cam may be moved ahead relatively to its drive shaft and the abutments separated by pressure of the cam follower on the "fall" portion of the cam.

Another object of the invention is to provide in an actuating mechanism of the general type described, means for advancing the cam on its drive shaft for timing purposes, such means being in the character of a spacer which may be manually interposed between the described abutments with rapidity and convenience, even while the cam is in motion, or automatically, as desired.

Other objects and advantages will appear in the following description and in the illustrative embodiment of the invention in the accompanying drawings, in which.—

Fig. 1 is an elevational view of a magneto mounted on an explosive engine and driven therefrom by mechanism embodying the invention;

Figs. 2 and 3 are enlarged elevational views of the actuating mechanism, Fig. 3 showing the spacing device interposed between the coacting abutments to vary the "timing" of the cam;

Fig. 4 is a cross sectional view taken on the line 4—4 of Fig. 2;

Fig. 5 is a longitudinal section taken on the line 5—5 of Fig. 3;

Fig. 6 is a fragmentary elevational view, partly in section, illustrative of a modification; and

Figs. 7 and 8 are cross sectional views taken on the lines 7—7 and 8—8, respectively, of Fig. 6.

Referring to these drawings: A indicates conventionally an explosive or internal combustion engine, having a crank-shaft *b* and another shaft *c* which is driven, as by gears *d*, from shaft *b* at appropriate speed with relation to the frequency at which sparks are to be produced by the magneto for ignition purposes. The magneto, indicated conventionally at I, may be of any suitable type in which an armature *e* is movable to and from a core, or cores, *f* to vary the reluctance of a magnetic circuit. The magneto may, for example, be of the type disclosed in the patent above alluded to. For the present purposes, it will suffice to state that the armature *e* is gradually moved toward cores *f*, as by a cam 10, and cam follower 11, and is later released for movement with relative rapidity away from the cores *f*, at which time the ignition spark is generated. As illustrated, the release of the cam follower 11 occurs once on each revolution of shaft *c*, although the frequency of release relatively to the revolutions of shaft *c* may be varied, as desired. The movement of the cam follower 11 away from the cores may be accomplished by any suitable means capable of exerting sufficient pressure on cam 10 to move it forwardly on its drive shaft in a manner later to be described. A spring 12, for example, may be utilized to force the follower 11 toward cam 10 as indicated in Fig. 1 or the mechanism illustrated in the above-mentioned patent may be utilized for the same purpose.

The mechanism for controlling the movement of armature *e* will now de described with particular reference to Figs. 2 to 5 inclusive. The cam 10, as best shown in Fig. 4 is of the "edge" type and has its periphery formed to provide a gradual rise 13, which occupies the major portion of the periphery and terminates with the high part 14, and with a fall 15, which connects the part 14 with the low point 16 of the cam. The portion 15 is preferably a flat surface and, although of gradual slope, compared to the fall portion of the usual "let off" cam, is of considerably steeper slope than the rise 13. The cam 10 is intended to rotate in the direction of the arrow (although it is capable of being rotated in the opposite direction) and the portion 15 is so fashioned, as just described or otherwise, if desired, that a sufficient component of the pressure of the cam follower 11 upon it will be afforded to move the cam in the direction of its intended rotation, relatively to its driving shaft.

With this object in view, the cam 10 is mounted so as to be free to turn within limits relatively to its drive shaft *c*. As illustrated, the cam 10 is mounted to turn freely on a hub 17 and is held against axial displacement between a collar 18 suitably fixed thereto and a head 19 integrally formed with, or otherwise fixed to a, hub 17. The latter is fixed to shaft *c* in any suitable way as, for example, by a bolt 20 which passes axially through the hub and is threaded into shaft *c*. As illustrated, the head of bolt 20 does not directly abut the hub 17, but rather acts through the intermediary of a spacing sleeve 21 to clamp the hub against the end of shaft *c*. In order to drive the cam 10 from shaft *c*, or the hub 17 fixed thereto, interengageable abutments are provided one on the cam and one on the collar portion 19 of hub 17. Thus, a pin 22 is fixed to and projects radially outwards from collar 19 and a pin 23 is fixed to and projects axially outwards from an end face of cam 10 into the path of pin 22.

With the cam 10 travelling in the direction of the arrow (Fig. 4) and the follower 11 engaged with the "rise" 13, the pressure of the follower on the rise tends to turn the cam relatively to hub 17 in a direction opposite to the direction of rotation, whereby the pins 22 and 23 are held in engagement and the hub and cam rotate in synchronism until the follower reaches the high part 14 of the cam. When, however, the follower 11 rides onto the portion 15, its pressure, having a component in the direction of rotation of the drive shaft, forces the cam rapidly ahead on the drive shaft. The cam 10 thus moves ahead until the surface 15 becomes positioned at right angles to the line of pressure of the cam follower 11, at which time there is no force tending to move the cam in either direction. Consequently, the cam dwells in this position, until the pin 22 overtakes and engages the pin 23. Thus, a very rapid drop of the cam follower is permitted and this is accomplished without the usual attending noise. The follower never leaves engagement with the cam and thus there cannot be the noise incident to a subsequent re-engagement of these parts with impact of one upon the other, which occurs when one moving under momentum from a free fall is arrested by the other.

In order to provide for changing the angular position of the cam on shaft *c* to effect variations in timing, a spacer 24 is arranged to be interposed between pins 22 and 23 as shown in Fig. 3. The pins 22 and 23, when directly engaged as in Fig. 2, effect the release of the follower 11 at such time as to cause a retarded spark. These parts, when positioned as in Fig. 3, cause an advance in the time of the spark.

In order to conveniently interpose the spacer 24 to advance the spark while the

shaft *c* is in motion, it is formed as a part of a shell 25, which losely fits over the portion 19 of hub 17 and is capable of being moved angularly and axially within limits relatively thereto. To move the shell 25 axially, when released, a spring 26 is provided, which acts between the head of the bolt 20 and the head of the shell 25. A bayonet, or right angularly shaped, slot 27 is provided in the shell, into which slot a pin 28, fixed in collar 19 extends. Pin 28, when engaged in that portion of slot 27 which lies at right angles to the axis of the shell, prevents axial movement of the latter under the force of spring 26 and holds the shell and the spacer 24 in an inactive position, as shown in Fig. 2. The shell is further provided with a U-shaped recess 29 to receive pin 22, when the spacer 24 is interposed between the latter and pin 23. The shape of recess 29 is not particularly material, however, and it may be otherwise formed as long as it permits the shell 25 to move forwardly sufficiently to permit the interposition of spacer 24 between the pins 22 and 23. The shell 25, when turned sufficiently to bring pin 28 in line with that portion of slot 27 which is parallel to the axis of the shell, is likewise positioned that recess 29 is in line with pin 22. The shell 25 is preferably provided with a knurled portion 30, whereby it may be conveniently gripped manually.

Where it is desired to advance the spark automatically, I provide the slightly modified arrangement shown in Figs. 6, 7, and 8. The shaft *c*, as before, loosely carries the cam which is provided with an abutment 35 in the shape of an arcuate projection on a side face of the cam. The latter is held from endwise movement on shaft *c* between collars 36 and 37, both fixed thereon. The collar 37, on that face adjacent to the cam, carries an abutment 38, similar to and adapted for engagement by the abutment 35. The cam 10 is driven in the direction of the arrow by the engagement of the abutment 38 with abutment 35. During each revolution, cam 10 is forced ahead in the same manner as before, and the abutments 35 and 38 are separated. The spacer, for interposition between these abutments, consists of a "keystone" shaped member 39 which is fixed to a pin 40 slidably mounted in collar 37 for movement parallel to the axis of shaft *c*. Pin 40 has an enlarged rounded end 41 protruding from that end of the collar 37 remote from cam 10 and a spring 42 acting between this end 41 and a shoulder in the collar holds the spacer 39 retracted, as shown, in a recess in the collar and out of the path of the abutments 35 and 38.

For automatically moving the spacer 39, a ring 43 is loosely mounted on shaft *c* and carries a cam 44 which, when the ring is shifted around the shaft *c* and thus relatively shifted with respect to collar 37, will engage the end 41 and move spacer 39 into the path of the abutments. Ring 43 may be shifted by any suitable means, but I prefer to shift it automatically when the engine reaches a predetermined speed. To this end, a disc 45 is fixed to shaft *c* and on the disc and on opposite sides of shaft *c* are pivoted at 46 relatively heavy members 47. The free ends of these members are connected to disc 45 by means of links 48. A spring 49, connecting the pivot of one member 47 to the free end of the other, normally holds the members 47 in their inner positions and ring 43 in such position that pin 40 is not advanced by cam 44. When the engine reaches a predetermined speed, which may be gauged as desired, the members 47 tend to move outwardly by centrifugal force and shift ring 43 around shaft *c*. This shifting, of course, cannot take place until the abutments 35 and 38 separate but immediately that such separation occurs the ring 43 shifts and cam 44 moves the spacer 39 between the abutments and holds it thus positioned as long as the speed of the engine is maintained at or above the chosen predetermined speed.

In operation, the shell 25 is positioned, as shown in Fig. 2, on starting of the engine A, the cam 10 being so located on its drive shaft as to cause the production of a retarded spark from the magneto I. In the case of the device shown in Figs. 6 to 8, this is automatically accomplished. The cam operates the armature *e* of the magneto as already set forth in detail. After the engine has been started and it is desired to advance the spark, the shell 25 is momentarily lightly gripped sufficiently to cause pin 28 to move out of the "bayonet" portion of slot 27 and free the shell for axial movement, which occurs rapidly and automatically under the action of spring 29. The interposition of spacer 24 between the pins 22 and 23 occurs, of course, when the latter separate as the cam 10 is moved rapidly ahead on its drive shaft. The operation of the device shown in Figs. 6 to 8 has already been explained.

The invention has been disclosed herein for illustrative purposes, but the scope of the invention is defined by the appended claims rather than by the foregoing description.

What I claim is,—

1. In a magneto, a movable armature, an actuating cam, and a cam follower therefor, a driving member with relation to which the cam is free to turn, a device on the cam and a device on said member to drive the cam from the latter by abutment, and means forcing said follower against the cam; the latter having a part which, when engaged

by said follower, will, by the force of said means, move the cam ahead of its driving member and permit a rapid movement of the follower without disengagement from the cam.

2. In a magneto, a movable armature, an actuating cam therefor, a driving member with relation to which the cam is free to turn, a device on the cam and a device on said member to drive the cam from the latter by abutment, and means forcing said armature toward the cam, the cam having a part so inclined to the direction of pressure from the armature that pressure from the latter on such part will move the cam ahead relatively to its driving member.

3. In a magneto, a movable armature, an actuating cam for moving the armature in one direction and releasing it for movement in the other direction, means for moving the armature in the second direction, a driving member with relation to which the cam is free to turn, interengageable devices one on the cam and one on said member to drive the former from the latter, said cam having a surface for moving the armature in the first direction, and a second surface so inclined to the direction of pressure from the armature that the cam will be moved ahead of its driving member by the force that moves the armature in the second direction.

4. The combination, with a cam follower, of a cam for moving it in one direction and releasing it for movement in an opposite direction, a driving member with relation to which the cam is free to turn, and interengageable devices one on said cam and one on said member for driving the former from the latter, the contour of said cam for moving the follower in the first-named direction being such that a component of the pressure of the follower on the cam tends to hold said means in engagement, the contour of the cam for releasing the follower for movement in the other direction being such that the pressure of the follower moves the cam ahead relatively to the driving member in the direction of its rotation.

5. In a magneto, a movable armature provided with a cam follower, a drive shaft, a cam thereon with which said follower is constantly engaged under all operating conditions and means periodically permitting a relative slip about the axis of said shaft between said cam and follower so that the change in relative positions of the cam and follower may be periodically increased over that effected by said drive shaft.

6. In a magneto, a movable armature, driving means, an actuating cam for the armature free to turn relatively to said means, interengageable devices one on said cam and one on said means arranged by abutment to drive the former from the latter, and spacing means movable between said devices to vary the position of the cam on its driving means.

7. In a magneto, a movable armature, driving means, an actuating cam for the armature free to turn relatively to said means, interengageable devices one on said cam and one on said means arranged by abutment to drive the former from the latter, spacing means movable between said devices to vary the position of the cam on its driving means, and means to releasably hold the spacing means in an inactive position.

8. In a magneto, a movable armature, driving means, an actuating cam for the armature free to turn relatively to said means, interengageable devices one on said cam and one on said means arranged by abutment to drive the former from the latter, spacing means movable between said devices to vary the position of the cam on its driving means, means to move said spacing means toward said devices, and manually releasable means to hold said spacing means in an inactive position.

9. In a magneto, a movable armature, an actuating cam, and a cam follower therefor, a driving member with relation to which the cam is free to turn, a device on the cam and a device on said member to drive the cam from the latter by abutment, and means forcing said follower against the cam, the latter having a part so inclined to the direction of pressure of the follower that pressure of the latter on such part will move the cam ahead of its drive shaft and separate said devices, a second member axially movable relatively to said driving member and carrying a spacer for interposition between said devices when separated, means to move said members the one relatively to the other, and manually releasable means to hold the second member in inactive position.

10. In a magneto, a movable armature, an actuating cam, a cam follower therefor, a driving member with relation to which the cam is free to turn, a device on the cam and a device on said member to drive the cam from the latter by abutment, means forcing said follower against the cam, the latter having a part so inclined to the line of travel of the follower that pressure of the latter on such part will move the cam ahead of its drive shaft and separate said devices, a second member axially and angularly movable relatively to said driving member and carrying a spacer for optional interposition between said devices when separated, means to move said members axially, the one relatively to the other, means operable by relative angular movement of said members to release the latter for axial movement.

11. In a magneto, a movable armature, driving means, an actuating cam for the armature free to turn relatively to said means, interengageable devices one on said cam and

one on said means arranged by abutment to drive the former from the latter, and spacing means automatically movable between said devices to vary the position of the cam on its driving means.

12. In a megneto, a movable armature, driving means, an actuating cam for the armature free to turn relatively to said means, interengageable devices one on said cam and one on said means arranged by abutment to drive the former from the latter, and spacing means operable as the engine reaches a predetermined speed to move between said devices to vary the position of the cam on its driving means.

In testimony whereof I have affixed my signature.

PHELPS BROWN.

C. F. KETTERING.

ENGINE.

APPLICATION FILED APR. 1, 1918.

1,430,524. Patented Sept. 26, 1922.

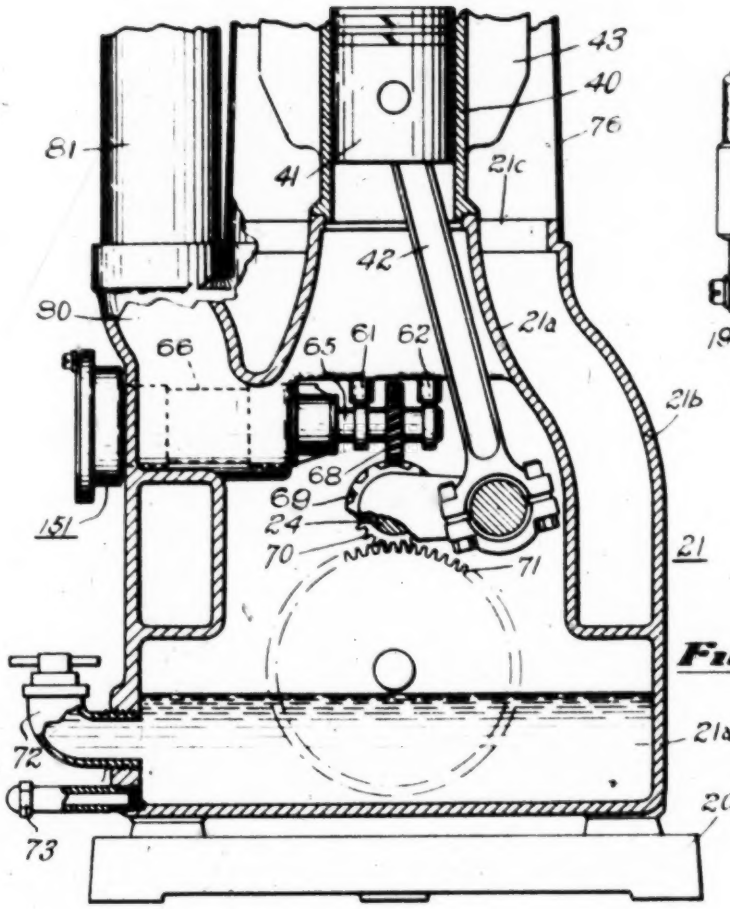

Fig. 1.

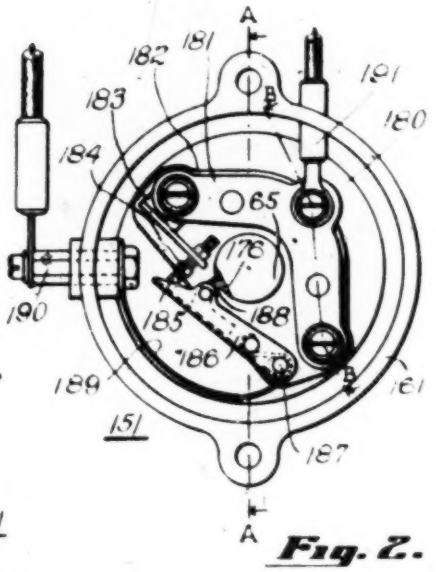

Fig. 2.

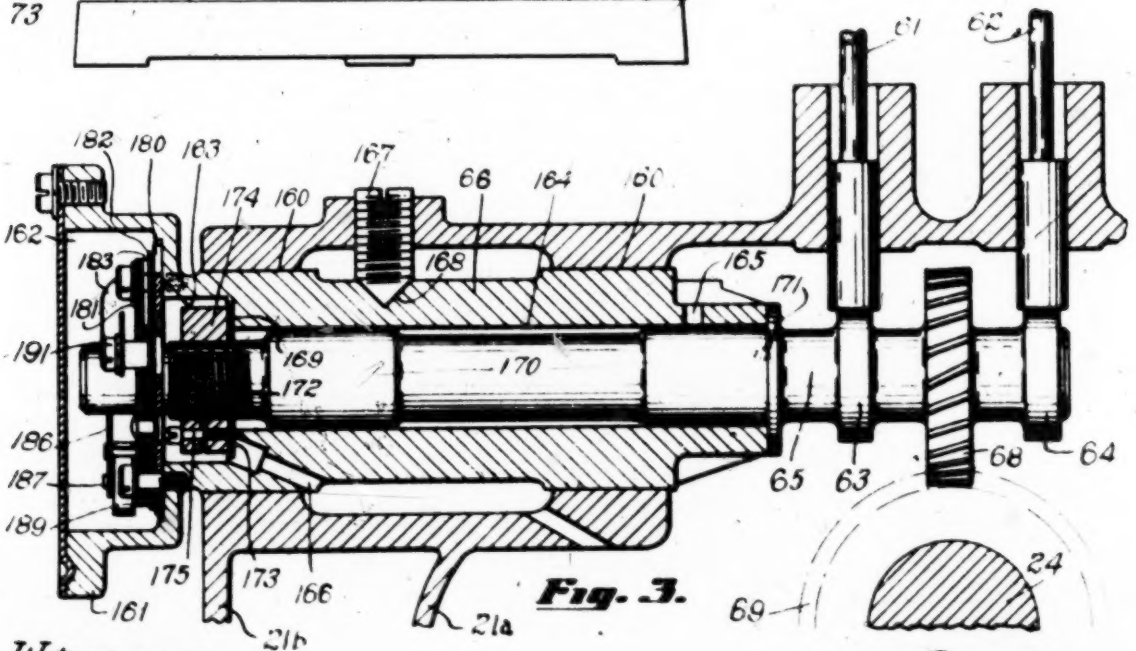

Fig. 3.

Witnesses
Warren Schmidling
Geo. H. Wallace

Inventor
Charles F. Kettering
By J. Ralph Dehn
Attorney

Patented Sept. 26, 1922. 1,430,524

UNITED STATES PATENT OFFICE.

CHARLES F. KETTERING, OF DAYTON, OHIO, ASSIGNOR, BY MESNE ASSIGNMENTS, TO DELCO-LIGHT COMPANY, OF DAYTON, OHIO, A CORPORATION OF DELAWARE.

ENGINE.

Application filed April 1, 1918. Serial No. 225,902.

To all whom it may concern:

Be it known that I, CHARLES F. KETTERING, a citizen of the United States of America, residing at Dayton, county of Montgomery, and State of Ohio, have invented certain new and useful Improvements in Engines, of which the following is a full, clear, and exact description.

This invention relates to an internal-combustion engine and has for its principal object the provision of improvements in the construction thereof.

An object of the invention is to provide an ignition timer and cam shaft assembly which may be removed as a unit from the crank case of the engine while maintaining the crank case substantially intact.

More specifically, it is an object of the invention to provide the crank case with an opening adapted to receive a bearing member for the engine cam shaft, the opening being of such size as to permit the withdrawal of the bearing member and cam shaft, together with all operating parts carried thereby, to the exterior of the crank case without removing any substantial part of the crank case or gaining access to the interior thereof.

Other objects of the present invention will be apparent from the following description of a preferred embodiment thereof, reference being had to the accompanying drawings.

In the drawings:

Fig. 1 is a central longitudinal sectional view of an engine embodying the present invention, parts thereof being shown in elevation;

Fig. 2 is an end view of the cam shaft bearing member showing the ignition timer elements mounted thereon; and

Fig. 3 is a sectional view of a portion of the crank case showing the ignition timer and valve shaft assembly partly in section and partly in elevation, the bearing member and timer housing being a section on the line A—A of Fig. 2 and the timer mechanism within the timer housing being a section on the irregular line B—B of Fig. 2.

Referring to the drawings, 20 designates a base supporting a crank case casting 21. Casting 21 comprises the crank case proper 21^a, which includes a lubricant reservoir located at the bottom of the casting, and a chamber extending upwardly from the reservoir which provides a housing for the crank shaft, connecting rod, and other moving parts. The crank case casting 21 also includes a jacket 21^b surrounding the upper portion of the crank case, said jacket terminating with a circular flange 21^c substantially on the level with the upper end of the crank case 21^a, and cooperating with crank case 21^a to form an annular passage surrounding said crank case for a purpose to be described.

The crank case 21^a supports cylinder 40, in which is mounted for reciprocation a piston 41, which is connected by means of connecting rod 42 to crank shaft 24 journaled in the walls of the crank case. The engine is provided with the usual intake and exhaust passages, puppet valves therefor, and suitable valve gear for operating the valves, all operating in a manner well understood by those skilled in the art and for that reason not deemed necessary to be illustrated. The valve gear includes push rods 61 and 62 adapted to be actuated by cams 63 and 64 carried by the cam shaft 65 which is mounted for rotation in a sleeve bearing member 66 extending through an opening in the wall of the crank case casting. The cam shaft and its bearing member carry at their outer ends the ignition timer mechanism designated generally by the reference character 151. The cam shaft and timer mechanism are operated from the engine crank shaft by means of cooperating gears 68 and 69 mounted on the cam shaft and crank shaft respectively.

The engine herein illustrated is provided with a breather 81 which is connected at its upper end with the intake passage and at its lower end communicates with the crank case through passage 80. The breather is substantially the same as that which forms the subject matter of my Patent Number 1,380,974, dated June 7, 1921. Around the cylinder and its associated parts there is disposed a draft tube 76 which fits over the flange 21^c on the crank case jacket 21^b and which, with the cylinder 40, forms a continuation of the passage between the crank case 21^a and the crank case jacket 21^b. Suitable means may be provided for causing the circulation of cooling air through the passage about the cylinder and the crank case, and to more effectively cool the cylinder 40 it is provided with radiating fins 43.

Gear 71 mounted upon casting 21 cooperates with gear 70 carried by the crank shaft 24 for the purpose of throwing oil which is contained in the lower part of the crank case 21ª, to the various moving parts contained within the crank case. Oil may be introduced through pipe 72 and may be drained off through pipe 73.

The cam shaft and ignition timer assembly will next be described. Referring to Figs. 1 and 2, the crank case casting 21 is bored transversely at 160 to provide an opening for the reception of cam shaft bearing member 66, which is provided with finished surfaces adapted to engage with the corresponding finished surfaces of the bore 160 adjacent both ends thereof as shown. One end of the cam shaft bearing member 66 is flared outwardly to form a cup shaped extension or timer cup 161, concentric with the cam shaft which forms a chamber 162 for housing the ignition timer elements. The bearing member 66 is further provided with a recess 163 for a purpose to be described, and is bored out longitudinally at 164 to form a bearing for the cam shaft 65. Bearing member 66 is secured in position within the crank case and located with relation to the crank shaft, by means of set screw 167 which seats in socket 168 drilled in the bearing.

Cam shaft 65 is provided with journals 170, a shoulder 171 and with a threaded portion 172 which is engaged by lock nut 174 adapted to be locked in position by means of screw 175. Cam shaft 65 is located with respect to the bearing member 66 by means of shoulder 171, abutting one end of said bearing member and by means of nut 174 and washer 173, located in recess 163 and abutting shoulder 169 formed on the other end of said bearing member. Lubrication for the cam shaft bearing is provided for by means of passage 165 conducting lubricant, which is splashed up by means of the crank shaft 24 and the lubricating gear 71, around the cam shaft journals 170. Passage 166 conducts away the surplus lubricant which returns to the crank case.

The outer end of the cam shaft is flattened at 176 to provide the timer camming surface. Mounted within the chamber 162 and upon timer cup 161, is the timer base 180. Carried by the base 180 and insulated therefrom by the insulating plates 181 and 182, between which it is secured, is a conducting plate 183 terminating in a bracket which adjustably supports stationary timer contact 184. Cooperating with stationary contact 184 there is contact 185, mounted upon contact arm 186 which is pivotally mounted upon insulating plate 182 by means of pivot 187. Contact arm 186 carries a fiber cam follower 188, which cooperates with the timer cam surface at the end of cam shaft 65. A spring 189 serves to maintain the timer contacts in touching relation, except at such times as the cylindrical surface of the outer end of the cam shaft 65 engages with cam follower 188. Spring 189 serves also to conduct current from timer terminal 190 to contact arm 186. Timer terminals 190 and 191 may be connected in series with a battery and the primary winding of an ignition coil, not shown. It is evident that the closing of timer contacts will permit the current to build up in the primary winding of the ignition coil, and at the separation of the contacts will produce a sparking impulse in the secondary winding to give the necessary ignition spark at the spark plug of the engine.

It will be apparent from the foregoing description that there has been provided a cam shaft, which carries valve operating cams and the timer cam, and also a gear adapted to be driven by a gear on the crank shaft. By virtue of this construction there is but one driving connection between the crank shaft and the cam shaft and no geared connection between the cam shaft and the timer cam. The cam shaft gear, the valve operating cams and the timer cam may be accurately located with respect to each other, or may be formed integrally with the cam shaft in a very simple manner. It follows that the problem of locating the various cams with respect to the engine crank shaft has been solved in an extremely simple manner. It is also apparent, that there has been provided a bearing member for the cam shaft which serves as a housing for the ignition timer elements, and that said bearing member and parts carried thereby, including the cam shaft, may be removed in assembled relation as a unit from the crank case. This is possible because the diameter of the bore or opening 160 is made larger than the cam shaft gear 68 and cams carried by the cam shaft, so that these operating parts may clear the opening formed in the crank case.

The removal of the ignition timer and cam shaft assembly may be readily and quickly accomplished by simply loosening the set screw 167, raising the push rod 61 until it clears the gear 68 and then, by taking hold of the timer cup 161, withdrawing the entire assembly axially through the bore or opening 160, the gear 68 unmeshing with gear 69 during this movement. To reassemble, the operation is of course reversed except that it may be necessary, in addition to raising the push rod 61 until it clears the gear 68, to also raise the push rod 62 to clear the cam 64 as the latter is moved into place under the push

rod 62. In any event, it will be observed, the operating parts or means 63, 64, and 68 may be readily disengaged from the parts cooperating therewith, and the cam shaft and parts assembled thereon either withdrawn or inserted through the opening 160 while maintaining the crank case substantially intact. Where the expression "substantially intact" is used in the claims as applied to a crank case it should be clearly understood that this has reference to any suitable or desired construction of crank case, whether completely closed or only partially closed, in which the cam shaft and operating parts assembled thereon may be removed through an opening in the crank case without removing some substantial part of the crank case or first gaining access to the interior thereof for the purpose of adjusting, disengaging, or removing some interferring or cooperating part on the interior of the crank case.

While the present invention is herein shown and described as applied to the crank case of an internal-combustion engine, it should be understood that this is not to be considered as a limitation in any respect, since the invention is equally useful in any other device or apparatus requiring the removal of a shaft and the parts assembled thereon for inspection, repair or replacement.

While the form of mechanism herein shown and described constitutes a preferred embodiment of one form of the invention, it is to be understood that other forms might be adapted and various changes and alterations made in the shape, size, and proportion of the elements therein, without departing from the spirit and scope of the invention.

What I claim is as follows:

1. In a device of the kind described, the combination in an internal-combustion engine including a crank case, a crank shaft supported thereby, an operating valve, and an ignition device; of a cam shaft provided with a valve cam and an ignition timer cam; a bearing member supporting the cam shaft and provided with means for supporting ignition timer elements which include cooperating stationary and movable contacts adapted to be connected in an ignition circuit; a contact arm carrying the movable contact, mounted on the bearing member, and provided with a portion engaging the timer cam; gearing within the crank case between the cam shaft and crank shaft; and means provided on the crank case for removably supporting the cam shaft bearing member, said supporting means being constructed and arranged so as to permit the removal of the cam shaft and bearing member, and parts assembled thereon, to the exterior of the crank case, while maintaining the latter substantially intact.

2. In a device of the kind described, the combination in an internal-combustion engine including a crank case, a crank shaft supported thereby, an operating valve, and an ignition device; of a driving gear on the crank shaft; a cam shaft bearing member having a bearing within which a cam shaft may be supported for rotation, and having a cup-shaped extension on one end thereof; ignition timer elements mounted upon the cup-shaped extension including movable and stationary contact elements adapted to be connected in an ignition circuit; a cam shaft supported in said bearing, and provided with a valve cam and a timer cam adapted to cooperate with the movable contact element of the ignition timer, and having a gear adapted to cooperate with the driving gear of the crank shaft; and provisions formed upon the crank case for supporting the cam shaft bearing member with said gears in engagement within the crank case, said bearing member and said supporting provisions being constructed and arranged so that the bearing member and parts supported thereon may be removed in assembled relation from the crank case to the exterior thereof, while maintaining the crank case substantially intact.

3. In a device of the kind described, the combination in an internal-combustion engine having a crank case and a crank shaft; of an ignition circuit-controlling device including circuit breaking elements; a shaft provided with means for operating the engine valves and the circuit breaking elements; a common element for supporting the shaft and ignition circuit-controlling device upon the crank case; and gearing within the crank case for driving the second mentioned shaft from the crank shaft, the common element and second mentioned shaft being removable in assembled relation from the crank case to the exterior thereof, while maintaining the crank case substantially intact.

4. In a device of the character described, in combination, a crank case provided with an opening in the wall thereof; a crank shaft journaled in the crank case; a shaft extending through said opening and supported for rotation therein; a driving connection between said shaft and the crank shaft including a gear mounted on said shaft within the crank case of a size adapted to pass through said opening; and means cooperating with said shaft and adapted to be actuated thereby, said cooperating means being constructed and arranged to permit the removal of said shaft and parts assembled thereon through said opening while maintaining the crank case substantially intact.

5. In a device of the character described, in combination, a crank case provided with an opening in the wall thereof; a crank shaft journaled in the crank case; a shaft extending through said opening and supported for rotation therein; a driving connection between said shaft and the crank shaft including a gear mounted on said shaft within the crank case of a size adapted to pass through said opening; and means cooperating with said shaft and adapted to be actuated thereby, said means including a cam on said shaft and being constructed and arranged to permit the removal of said shaft and parts assembled thereon through said opening while maintaining the crank case substantially intact.

6. In a device of the character described, in combination, a crank case provided with an opening in the wall thereof; a crank shaft journaled in the crank case; a shaft extending through said opening and supported for rotation therein; a driving connection between said shaft and the crank shaft including a gear mounted on said shaft within the crank case of a size adapted to pass through said opening; and means cooperating with said shaft and adapted to be actuated thereby, said means including a cam on said shaft within the crank case and being constructed and arranged to permit the removal of said shaft and parts assembled thereon through said opening while maintaining the crank case substantially intact.

7. In a device of the character described, in combination, a crank case provided with an opening in the wall thereof; a crank shaft journaled in the crank case; a shaft extending through said opening and supported for rotation therein; a driving connection between said shaft and the crank shaft including a gear mounted on said shaft within the crank case of a size adapted to pass through said opening; and means cooperating with said shaft and adapted to be actuated thereby, said means including valve and timer actuating cams driven by said shaft, and said means being constructed and arranged to permit the removal of said shaft and parts assembled thereon through said opening while maintaining the crank case substantially intact.

8. In a device of the character described, in combination, a crank case provided with an opening in the wall thereof; a crank shaft journaled in the crank case; a shaft extending through said opening and supported for rotation therein; a driving connection between said shaft and the crank shaft including a gear mounted on said shaft within the crank case of a size adapted to pass through said opening; and means including timer mechanism cooperating with said shaft and adapted to be actuated thereby, said cooperating means being constructed and arranged to permit the removal of said shaft and parts assembled thereon through said opening while maintaining the crank case substantially intact.

9. In a device of the character described, in combination, a crank case provided with an opening in the wall thereof; a crank shaft journaled in the crank case; a shaft extending through said opening and supported for rotation therein; a driving connection between said shaft and the crank shaft including a gear mounted on said shaft within the crank case of a size adapted to pass through said opening; and means cooperating with said shaft and adapted to be actuated thereby, said cooperating means being constructed and arranged to permit the removal of said shaft and parts assembled thereon through said opening while maintaining the crank case substantially intact, and said means including ignition timer-mechanism adapted to be actuated by the outer end of said shaft.

10. An engine of the character described comprising in combination, a casing provided with an opening in the wall thereof; a crank shaft; a second shaft; means for journaling said shafts for rotation in the casing, said means including a bearing member for one of said shafts in said opening; a driving connection between said shafts including a gear on said last-mentioned shaft within the casing of a size adapted to pass through said opening; and means on said last-mentioned shaft adapted to cooperate with other movable engine parts, said means and said cooperating engine parts being constructed and arranged to permit endwise removal of said last-mentioned shaft with said gear and said bearing member assembled thereon through said opening while maintaining the casing substantially intact.

In testimony whereof I affix my signature.

CHARLES F. KETTERING.

Witnesses:
WARREN SCHMIEDING,
J. W. McDONALD.

P-173

Mar. 6, 1923. 1,447,245

W. W. GORE

INTERNAL COMBUSTION ENGINE

Filed Sept. 25, 1918 2 sheets-sheet 1

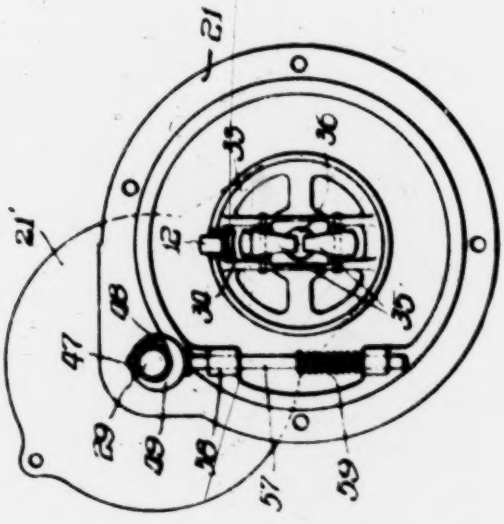

Fig 3

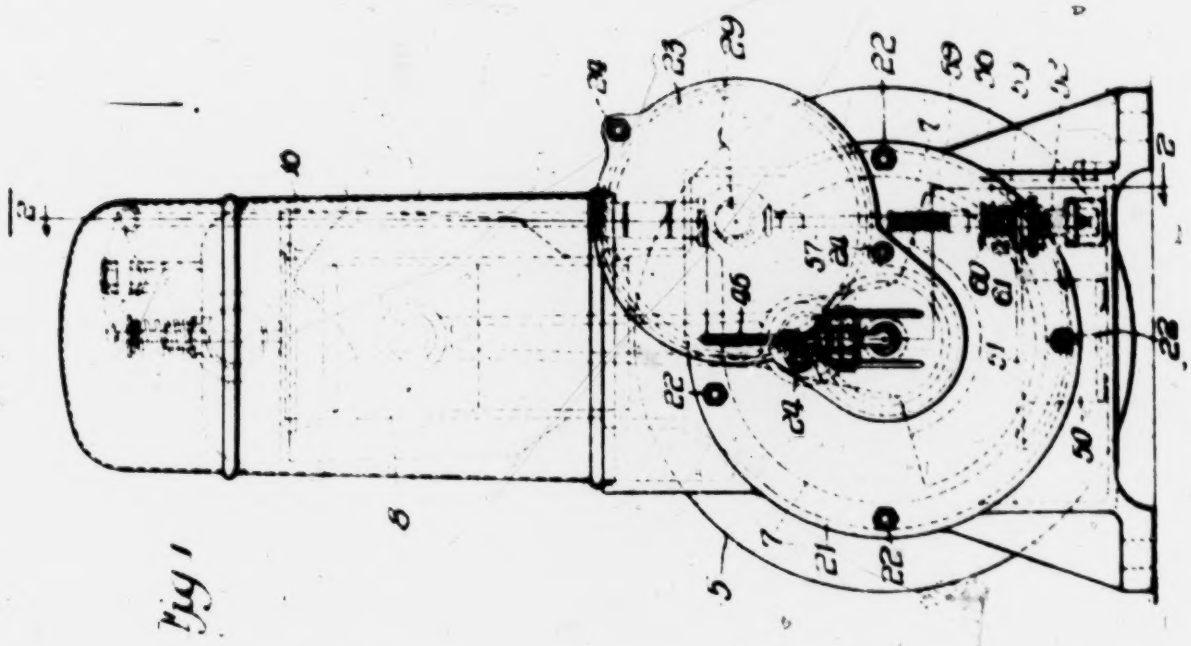

Fig 1

Witness
A Burkhardt

Inventor
Warren W. Gore,
By Pond + Wilson
Atty's

P-175

Mar. 6, 1923. 1,447,245

W. W. GORE

INTERNAL COMBUSTION ENGINE

Filed Sept. [illegible], 1918 [illegible] sheets sheet

Fig 2

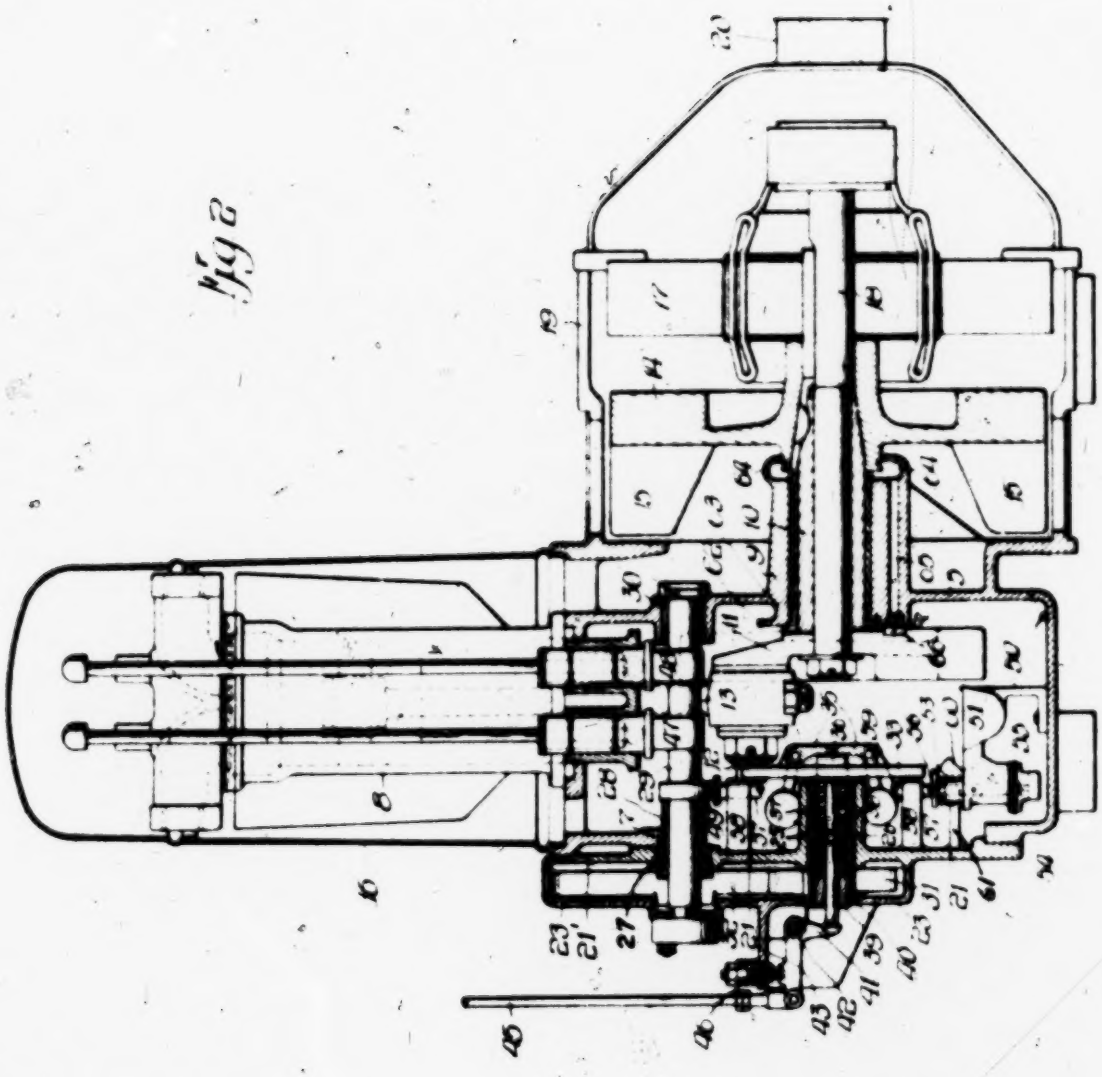

Witness
[illegible] Burkhardt

Inventor
Warren W. Gore,
By Pond & Wilson.
Attys.

Patented Mar. 6, 1923. 1,447,245

UNITED STATES PATENT OFFICE.

WARREN W. GORE, OF MADISON, WISCONSIN, ASSIGNOR TO FULLER & JOHNSON MFG. CO., OF MADISON, WISCONSIN, A CORPORATION OF WISCONSIN.

INTERNAL-COMBUSTION ENGINE.

Application filed September 25, 1918. Serial No. 255,560

To all whom it may concern:

Be it known that I, WARREN W. GORE, a citizen of the United States, residing at Madison, in the county of Dane and State of Wisconsin, have invented certain new and useful Improvements in Internal-Combustion Engines, of which the following is a specification.

This invention relates to internal combustion engines, and has reference more particularly, although not exclusively, to single-cylinder stationary engines of the upright type such as are extensively employed as a power unit in domestic use for pumping water, generating electric current, etc.

Since gas engines of this character are generally owned and used by persons not particularly skilled in their construction and operation, it is desirable to make them not only as simple, durable and completely automatic as possible, but also to make them easy of access, especially as regards the crank-chamber and its contained parts, for inspection, cleaning, adjustment, and repairs when necessary, with a minimum of labor and trouble in the disassembling and reassembling of parts; and one of the objects of the present invention is to provide an internal combustion engine possessing in a superior degree the advantages stated. More specifically, one object of the invention is to provide a gas engine of the enclosed crank-case type, wherein the crank-case is provided with a removable side or cover plate carrying the cam-shaft and the driving mechanism of the latter, said driving mechanism being automatically engaged with and disengaged from the crank-pin of the engine shaft when the detachable side of the crank-case is applied and removed. In the most complete and approved form of the invention herein illustrated this detachable side may also carry the governing mechanism of the engine throttle. Another object of the invention is to provide in the crank-case an improved oil pan through which the lower end of the connecting rod sweeps to distribute oil to the cylinder walls on the splash principle, with a pump also located in the crank-case to maintain a supply of oil to said pan, and a pump-driving mechanism carried by said removable side of the crank-case and automatically registering with the oil-pump plunger when the removable side is applied to the crank-case.

Other objects and advantages secured by the invention will be apparent to those skilled in the art from the following detailed description, taken in connection with the accompanying drawings wherein I have illustrated one practical embodiment of the invention, and in which—

Fig. 1 is a side elevation of the engine;

Fig. 2 is a vertical section, substantially on the offset line 2—2 of Fig. 1;

Fig. 3 is a detail view from the inner side of the detachable side plate or cover of the crank-case and parts carried thereby.

Referring to the drawings, 5 designates as an entirety the body of the crank-case formed with supporting feet 6, and having a large substantially circular opening 7 at one side thereof. Superposed on the crank-case is the engine cylinder 8, equipped with the usual piston, intake and exhaust valves, and ignition mechanism, with which parts my present invention is not concerned. On the opposite side of the crank-case from the opening 7 is a main bearing 9 for the engine shaft 10, on the inner end of which shaft is the usual balanced crank-arm 11 carrying crank-pin 12 on which is mounted the lower end of the piston-rod 13. Keyed on the crank-shaft is a fly-wheel 14 carrying fan-blades 16 by which air is drawn down through a hood 16 surrounding the cylinder to cool the latter. Beyond the fly-wheel I have indicated in Fig. 2 an electric generator 17, the armature shaft 18 of which is mounted within the hollow engine shaft 10. Secured to one side of the crank case and surrounding the fly-wheel and generator is a casing 19 formed at its outer end with a bearing 20 to receive a pulley-shaft extension of the engine shaft for power transmitting purposes, when the generator is not used.

21 designates a substantially circular plate that forms a cover or closure for the side opening 7 of the crank-case, being detachably secured to the rim of the opening by four machine screws 22 (Fig. 1). This plate 21 is formed with an integral eccentric extension 21′ that, with a portion of the plate 21, constitutes the inner wall of a gear case, the outer wall of which is formed by a flanged plate 23 secured to the inner wall by three

machine screws 24. On and centrally of the main cover-plate 21 is an integral inwardly extending boss 25 that forms a bearing for a hollow shaft 26, and in an opening 27 of said plate 21 is fitted a bearing sleeve 28 for the cam shaft 29, the other end of said cam shaft being journaled in a bearing sleeve 30 mounted in the opposite wall of the crank-case. Fast on the shafts 26 and 29 are the usual two-to-one gears 31 and 32. Fast on the inner end of shaft 26 is a skeleton disk 33 formed with a peripheral notch 34 (Fig. 3) that fits over the squared outer end of the crank-pin 12, being engaged with and disengaged from said crank-pin under a simple lateral movement of said disk.

Pivoted on the disk 33 are the governor elbow levers 35, the inner ends of which abut against a sliding rod 36 mounted in the hollow shaft 26 and pressed against the thrust of the governor levers by a spring 37. The inner end of rod 36 presses, through a ball thrust-bearing 38, against an alined rod 39 slidably mounted in a bearing sleeve 40 secured in the outer end of shaft 26. The outer end of rod 39 abuts against the depending arm 41 of an elbow lever pivoted at 42 to a bracket 43 on the outer side of the gear cover plate 23, and to the horizontal arm 44 of said elbow lever is pivoted an upwardly extending rod 45 that is connected to the throttle of the carbureter (not shown). An adjustable spring 46 mounted on bracket 43 bears downwardly on the horizontal arm 44 of the elbow lever and tends to open the throttle in opposition to the closing tendency of ball governor.

The cam shaft 29 carries the two cams 47 and 48 (Fig. 2) for operating the intake and exhaust valves of the cylinder, as usual in this type of overhead-valve engine. The cam shaft also carries an eccentric 49 for effecting the discharge stroke of an oil pump hereinafter described.

Secured to the bottom wall of the crank-case is a bracket 50 that supports an oil-pan 51 through which the lower end of the piston-rod sweeps at each revolution of the crank-shaft. This oil-pan is supplied with oil from the bottom of the crank-case by means of a pump comprising a cylinder 52, vertical plunger 53 and intake and discharge valves 54 and 55. The plunger is raised on its suction stroke by a spring 56, and is depressed on its working or discharge stroke by a rod 57 that is guided in lugs 58 on the inner face of the cover plate 21; the upper end of said rod being held in engagement with the eccentric 49 by a spring 59. On one side of the pump cylinder is pivoted a latch 60, the laterally bent upper end of which is adapted to engage over the upper end of the pump plunger to hold the same down against spring 56 when the detachable cover is being applied to the crank-case so as to bring the lower end of rod 57 into working engagement with the upper end of the plunger. While this engagement is being effected, the latch is kicked off by a lug 61 projecting inwardly from the inner face of cover plate 21.

My invention also includes an improved construction for effecting the lubrication of the main shaft bearing and the return to the crank-case of the oil that works through the main bearing. It will be observed that the main bearing 9 projects slightly inwardly of the side wall of the crank-case, and is formed on its upper side with a channel or pocket 62 to catch the oil splash, and with a duct 63 leading from said channel or pocket to the bearing. At the outer end of the main bearing is an annular channel 64 that catches the oil working through the bearing, and from the lowest point of channel 64 is a drain duct 65 drilled through a rib under the main bearing and leading into the crank-case, the inner end of said duct being provided with a check-valve 66. The crank-case is provided with the usual breather, which allows part of the air in the crank-case to discharge on the down stroke of the piston. On the up stroke of the piston a partial vacuum is formed in the crank-case which tends to create a suction through the bearings and also through the drain duct 65, thus returning to the crank-case the oil that has worked through the bearing into the oil-collecting channel 64. The check-valve 66 prevents the oil from being blown outwardly through the drain duct 65 on the down stroke of the piston. In this way a continuous circulation of oil through the main shaft bearing is maintained.

The principal advantage of the described construction resides in the facility and ease with which access may be obtained to the interior of the crank-case for inspection, cleaning, adjustment, or repairs, or any other purpose without partially dismantling or disassembling the various working parts of the engine. All that is necessary is to disconnect the governor-rod 45 from the throttle, remove the four machine screws 22, and withdraw the cover plate and gear casing with the parts carried thereby, as a unit, from the open side of the crank-case. This automatically disconnects the driving disk 33 of the cam-shaft and governor from the squared end of the crank-pin by a mere sliding movement. In reassembling it is impossible to disarrange the proper timing of the parts, since the registration of the notch 34 with the end of the crank-pin 12 insures the correct position of the valve cams.

It is believed that the foregoing will make clear to those skilled in the art the novel structural features, mode of operation, and

advantages of the present invention. Without limiting the invention to the specific details shown and described for purposes of illustration,—

I claim—

1. In an internal combustion engine, the combination of a crank-chamber having an engine-shaft bearing in one side wall thereof and a relatively large opening in the opposite side wall, an engine shaft mounted in said bearing, a crank-arm on said shaft, a crank-pin on said arm having a free end, a detachable cover-plate for said opening, and a cam-shaft and cam-shaft driving mechanism mounted on and removable as a unit with said cover-plate, said cam-shaft driving mechanism being automatically engaged with and disengaged from the free end of said crank-pin as said cover-plate is applied to and removed from said opening.

2. In an internal combustion engine, the combination of a crank-chamber having an engine-shaft bearing in one side wall thereof and a relatively large opening in the opposite side wall, an engine shaft mounted in said bearing, a crank-arm on said shaft, a crank-pin on said arm having a free end, a detachable cover-plate for said opening, and a cam-shaft and cam-shaft driving mechanism mounted on and removable as a unit with said cover-plate, said cam-shaft driving mechanism including a peripherally notched rotatable element that is slidable into and out of driven engagement with the free end of said crank-pin as said cover-plate is applied to and removed from said opening.

3. In an internal combustion engine, the combination of a crank-chamber having an engine-shaft bearing in one side wall thereof and a relatively large opening in the opposite side wall, an engine shaft mounted in said bearing, a crank-arm on said shaft, a crank-pin on said arm having a free end, a detachable cover-plate for said opening, a cam-shaft and cam-shaft driving mechanism mounted on and removable as a unit with said cover-plate, said cam-shaft driving mechanism being automatically engaged with and disengaged from the free end of said crank-pin as said cover-plate is applied to and removed from said opening, and a governor mechanism mounted in said cover-plate and actuated by an element of said cam-shaft driving mechanism.

4. In an internal combustion engine, the combination of a crank-chamber having an engine-shaft bearing in one side wall thereof and a relatively large opening in the opposite side wall, an engine shaft mounted in said bearing, a crank-arm on said shaft, a crank-pin on said arm having a free end, a detachable cover-plate for said opening, a cam-shaft and cam-shaft driving mechanism mounted on and removable as a unit with said cover-plate, said cam-shaft driving mechanism including a peripherally notched rotatable member journaled in said cover-plate and slidable into and out of driven engagement with the free end of said crank-pin as said cover-plate is applied to and removed from said opening, and a governor mechanism mounted in said cover-plate and actuated by said rotatable member of said cam-shaft driving mechanism.

5. In an internal combustion engine, the combination of a crank-chamber having an engine-shaft bearing in one side wall thereof and a relatively large opening in the opposite side wall, an engine shaft mounted in said bearing, a crank-arm on said shaft, a crank-pin on said arm having a free end, a detachable cover-plate for said opening, a cam-shaft journaled in said cover-plate, a gear-shaft also journaled in said cover-plate, co-operating gears on the outer ends of said shafts respectively, a gear-case attached to the outer side of said cover-plate, and a disk on the inner end of said gear-shaft having an opening to receive the free end of said crank-pin under a relative sliding movement as said cover-plate is applied to said opening of the crank-chamber, said cover-plate, shafts, gears, gear-case and disk being removable as a unit from said crank-chamber.

6. In an internal combustion engine, the combination of a crank-chamber having an opening in one of its side walls, an oil-pan mounted in said crank-chamber beneath and in the path of travel of the lower end of the piston-rod, a pump in said crank-chamber for supplying oil to said oil-pan, a detachable cover-plate for said opening, and operating mechanism for said pump mounted on the inner side of said cover plate and removable as a unit with the latter.

7. In an internal combustion engine, the combination of a crank-chamber having an opening in one of its side walls, an oil-pan mounted in said crank-chamber beneath and in the path of travel of the lower end of the piston-rod, a pump in said crank-chamber for supplying oil to said oil-pan, a detachable cover-plate for said opening, and operating mechanism for said pump, including a shaft, an eccentric on said shaft, and a rod driven by said eccentric and actuating the plunger of said pump, all mounted on, and removable as a unit with, said cover-plate.

8. In an internal combustion engine, the combination of a crank-chamber having an opening in one of its side walls, an oil-pan mounted in said crank-chamber beneath and in the path of travel of the lower end of the piston-rod, a pump in said crank-chamber for supplying oil to said oil-pan, a spring to actuate the plunger of said

pump on its suction stroke, a detachable cover-plate for said opening, operating mechanism, including a reciprocating rod engaging the outer end of said pump plunger, mounted on and removable as a unit with said cover-plate, a latch engaging said plunger to hold the same retracted and permit engagement of said plunger by said rod as said cover-plate is applied to said opening, and means carried by said cover-plate for disengaging said latch from said plunger after said rod has been engaged with the latter.

WARREN W. GORE.

Aug. 7, 1923. 1,463,958

C. F. KETTERING

MAGNETO IGNITION SYSTEM

Filed March 25, 1920 2 Sheets-Sheet 1

Fig. 1.

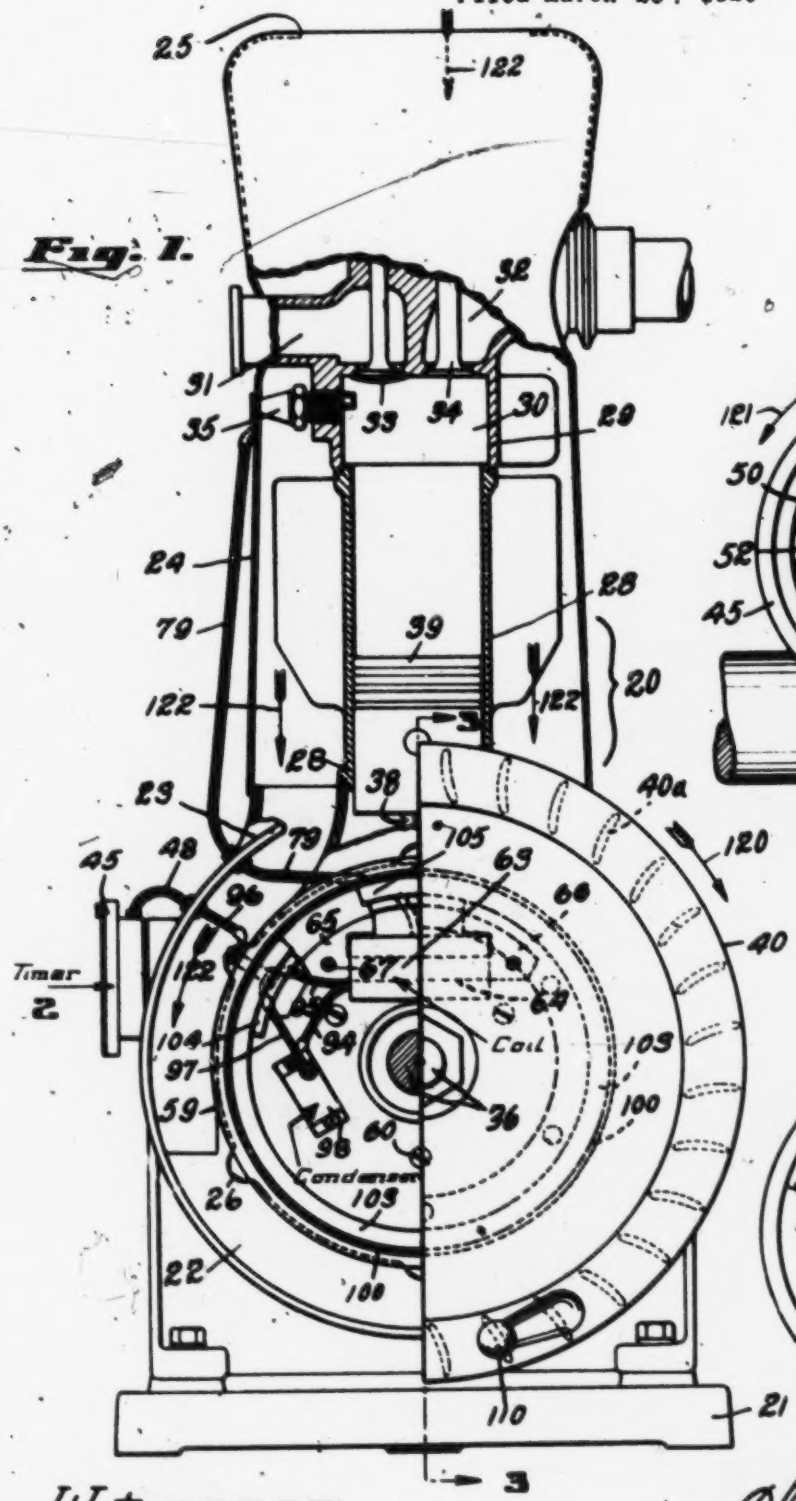

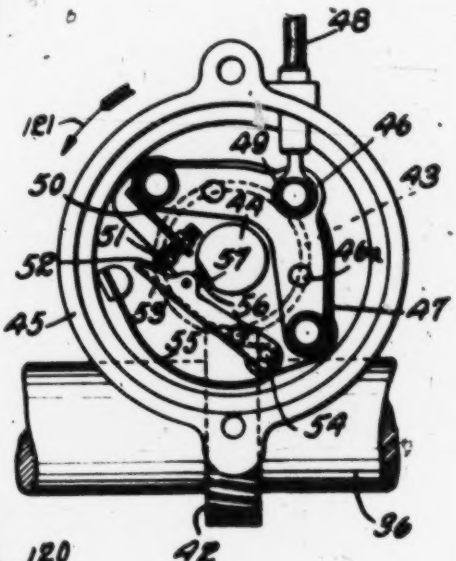

Fig. 2.

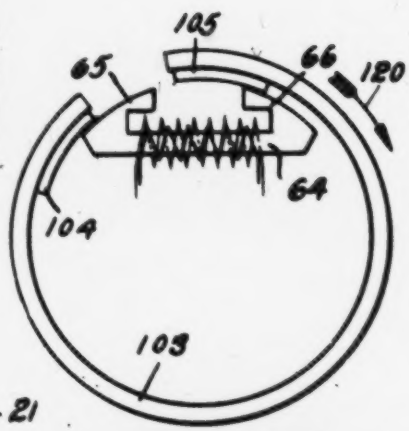

Fig. 5.

Witnesses
Warren Schmieding
Walter W. Riedel

Inventor
Charles F. Kettering
By Kerr, Page Cooper and Hayward
Attorneys

Aug. 7, 1923. 1,463,958

C. F. KETTERING

MAGNETO IGNITION SYSTEM

Filed March 25, 1920 2 Sheets-Sheet 2

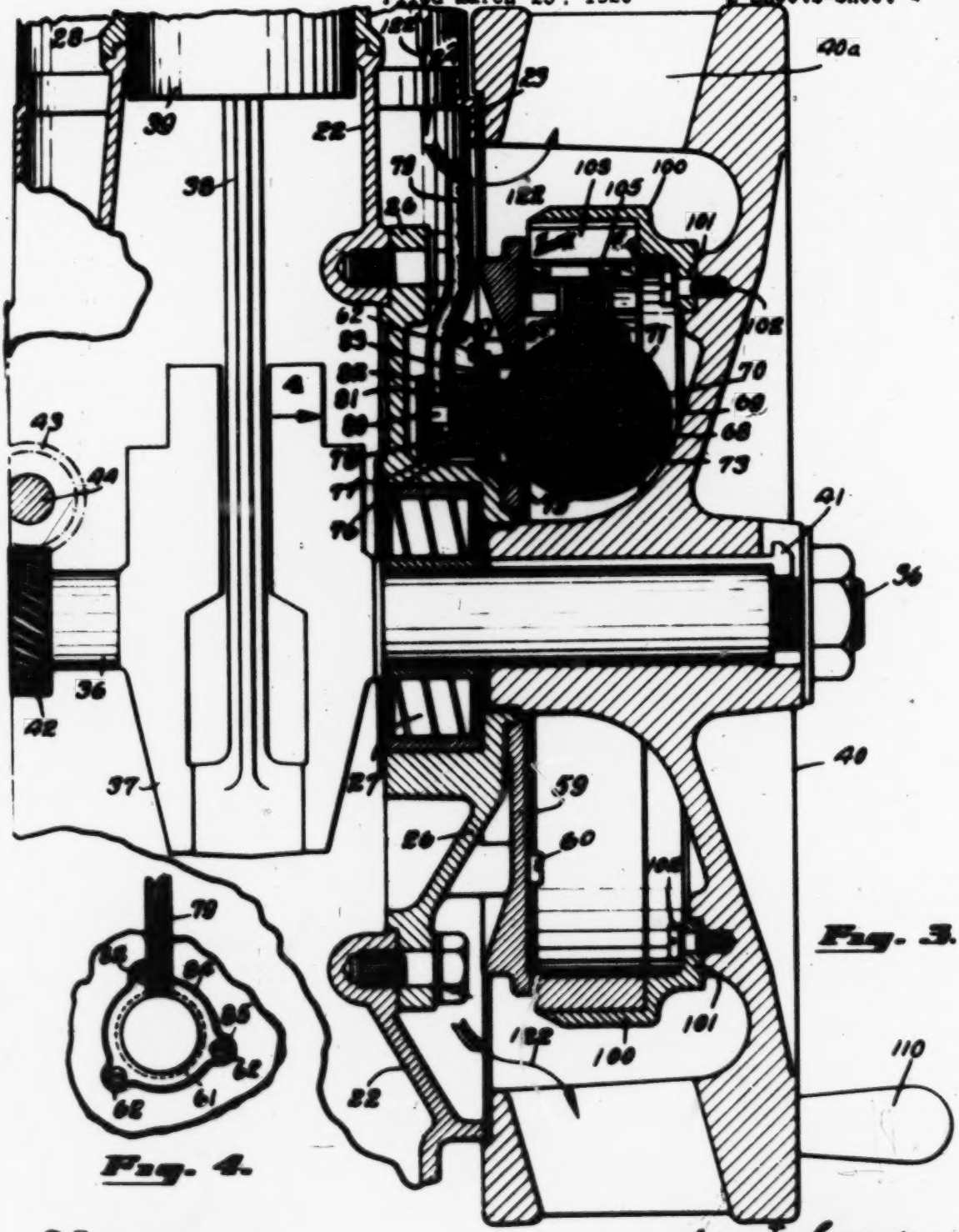

Fig. 3.

Fig. 4.

Witnesses
Warren Schmieding
Walter W. Riedel

Inventor
Charles F. Kettering
By Kerr, Page, Cooper & Hayward
Attorneys

Patented Aug. 7, 1923. 1,463,958

UNITED STATES PATENT OFFICE.

CHARLES F. KETTERING, OF DAYTON, OHIO, ASSIGNOR TO DELCO-LIGHT COMPANY, OF DAYTON, OHIO, A CORPORATION OF DELAWARE.

MAGNETO IGNITION SYSTEM.

Application filed March 25, 1920. Serial No. 368,789.

To all whom it may concern:

Be it known that I, CHARLES F. KETTERING, a citizen of the United States of America, residing at Dayton, county of Montgomery, and State of Ohio, have invented certain new and useful Improvements in Magneto Ignition Systems, of which the following is a full, clear, and exact description.

This invention relates to ignition systems for internal-combustion engines, and particularly to systems including a magneto having a rotatable part mounted upon the engine flywheel. Such a magneto is generally termed a "flywheel magneto"

It is an object of the invention to provide for the mounting of the rotatable magneto part upon the flywheel of an air-cooled engine wherein the flywheel is constructed to operate as a fan to cool the engine, the manner of mounting being such as not to interfere with the function of the flywheel as a fan. In this connection it is a further object to provide a housing for the magneto in order to protect it from particles of dirt or dust, such as might pass around the engine during the operation of the engine cooling system.

As a means of carrying out the foregoing objects, the flywheel and the engine frame have cooperating provisions which form the magneto housing.

A further object is to provide a separate location for the magneto timer which shall be accessible without requiring the removal of the flywheel.

It is a still further object of the present invention to provide a simple means for connecting the secondary winding of the magneto to the conductor leading to the spark plug.

Further objects and advantages of the present invention will be apparent from the following description, reference being had to the accompanying drawing, wherein a preferred embodiment of one form of the present invention is clearly shown.

In the drawing:

Fig. 1 is an elevation partly in section taken on the flywheel end of an internal-combustion engine, part of the flywheel being broken away showing the electrical connections between the different parts of the ignition system;

Fig. 2 is a front elevation of the timer shown in Fig. 1, looking in the direction of the arrow 2;

Fig. 3 is a fragmentary sectional view taken on line 3—3 of Fig. 1;

Fig. 4 is a view of the high tension terminal shown in Fig. 3, looking in the direction of the arrow 4; and

Fig. 5 is an elevational view, looking in the direction of Fig. 1, of the armature and magneto of the flywheel magneto, the magnet being shown in the position when the primary magneto circuit is interrupted to induce a sparking impulse.

Referring to the drawings, an internal combustion engine 20 includes a base 21 supporting a crank case 22, having an outer jacket 23 to provide an air space around crank case 22 for cooling purposes. Jacket 23 supports a draft tube 24 open at the upper end at 25. Crank case 22 is provided with a removable end cover 26 carrying a crank shaft bearing 27. Crank case 22 supports cylinder 28 carrying cylinder head 29 provided with explosion chamber 30. Chamber 30 is provided with intake passage 31 and exhaust passage 32 controlled by valves 33 and 34, respectively. Spark plug 35 projects into chamber 30.

A crank shaft 36 which is journalled within bearings, one of which is shown at 27, carries a crank 37. A connecting rod 38 connects the crank 37 with the piston 39. Crank shaft 36 carries a flywheel 40 which is keyed thereto by key 41. A gear 42 is provided on the crank shaft 36 which cooperates with a gear 43 carried by the timer shaft 44.

One end of timer shaft 44 rotates within a timer casting 45 projecting outwardly from the internal-combustion engine. A plate 46 is secured to the timer casting 45 by rivets 46ª and insulated from the casting by insulation strip 47. A conductor 48 is connected to plate 46 at terminal 49. A contact arm 50 which projects from the plate 46 carries an adjustable contact 51 which cooperates with a contact 52. Contact 52 is carried by an arm 53 which is pivotally mounted on stud 54 mounted on the casting 45. A spring

55 which is connected to the arm 53 normally tends to hold contacts 51 and 52 in contact. A block 56 provided on the arm 53 cooperates with cam shaft 44, said shaft having a flat portion 57 forming a cam cooperating with the block 56 intermittently to open contacts 51 and 52.

A non-magnetic bracket or plate 59 is secured to the end cover 26 by screws 60. Plate 59 is provided with an aperture 61 surrounded by an annular boss 62. A coil 63 is provided with an armature core 64 having armature heads 65 and 66, said heads being secured to the plate 59 by screws 67. A primary winding 68 is wound around core 64 and insulated therefrom by insulating material 69. Secondary winding 70 is wound around the primary winding 68 and insulated therefrom by insulating material 71. Insulating material 73 encircles the coil 63 and is provided with an opening 74 through which a hollow rivet 75 projects. A conically shaped non-conducting block 76 is riveted to the insulation 73 by the rivet 75 and is provided with a recess 77. A non-conducting plug 78 has an internally tapered surface which forms a seat for the block 76. A conductor 79 having a clip 80 attached thereto is inserted within a hole in the plug 78 and is held in place by a screw 81. One end of the winding 70 projects through the hollow rivet 75 into the recess 77 and is in contact with a spring 82. Spring 82 bears against screw 81. A flanged portion 83 on the plug 78 fits within the aperture 61 of the plate 59 and is secured therein by ring 84 which is held by screws 85 against the boss 62 of the plate 59.

Conductor 79 passes through crank case 22 and jacket 23 and is connected with spark plug 35. The other end of the secondary 70 is grounded on the primary 68 having one end grounded by means of wire 94 on the plate 59. Wire 95 connects the other end of the primary 68 with a terminal 96 which is mounted on plate 59 but insulated therefrom. Wire 48 connects terminal 96 with the timer.

Wire 97 connects terminal 96 with condenser 98 which is grounded upon plate 59.

A non-magnetic ring 100 having a flange 101 is secured to flywheel 40 by screws 102, and carries a permanent magnet 103 provided with pole shoes 104 and 105.

The engine is started manually by rotating by means of a handle 110 the flywheel 40 in the direction of arrow 120. Some time during the compression stroke of the engine the permanent magnet 103 will be in a position such that the armature head 65 will just bridge the gap between poles 104 and 105, short circuiting the flux of the magnet 103 from the armature core 64. Just prior to the proper firing time, the pole 105 will be leaving the head 65 and overlapping head 66, and the pole 104 will be overlapping the head 65. At this time there is a sudden inrush of flux from the magnet 103 across the armature core 64 causing the building up of current in the primary coil 68. By the time the magnet 103 is in the position shown in Fig. 5, the coil 68 will have built up to the maximum. This is the proper instant for firing, and the flat portion 57 on shaft 44 is arranged at this instant to cooperate with arm 53 to separate contacts 51 and 52 to interrupt the primary circuit. The direction of rotation of cam shaft 44 is indicated by arrow 121.

The interruption of the primary circuit will cause a sparking impulse to be induced in the secondary winding 70 thereby causing a spark to jump at the spark plug 35.

This particular construction and operation of the magneto generating elements is not of itself my invention but is described and claimed in the patent to R. A. Oglesby No. 1,279,750, issued September 24, 1918.

During each engine cycle there will be two revolutions of the flywheel hence there will be two abrupt reductions of magnetic flux in the armature core 64 during each engine cycle. By providing that the cam shaft 44 operates at one half engine speed there will be but one interruption of the primary circuit during each engine cycle to provide for the induction of a sparking impulse in the secondary. For a two cycle internal-combustion engine the cam shaft 44 may be operated at engine speed.

The periphery of the flywheel 40 is provided with spaced blades 40ª which during the operation of the engine create a draft causing the circulation of air about the cylinder 28 and between the crank case 22 and the jacket 23 and out through the flywheel, this current being indicated by the arrows 122 in Figs. 1 and 3. Referring to Fig. 3 it will be noted that the plate 59 and the ring 100 cooperate together to form an enclosure or housing for the magneto elements in such a manner as not to interfere with the function of the flywheel 40 as a fan. Ring 100 serves to direct air currents to the fan blades 40ª. This housing protects the magneto elements from particles of dirt and moisture which may be drawn through the flywheel during the cooling of the engine. The ring 100 also protects the magneto elements from anything which may happen to be dropped down through the spaces between the flywheel fan blades 40ª when the engine is stationary.

Instead of locating the magneto timer within the housing for the magneto generating elements, the timer is located outside of the flywheel and in a position which is readily accessible for purposes of adjustment or making repairs. This location of the timer is much more advantageous than

where the timer is located adjacent the magneto generating elements and within the flywheel structure. In the present invention the timer is accessible without removing the flywheel, whereas in the usual construction it is necessary to remove the flywheel to get at the timer.

It is apparent from the foregoing description that the construction and arrangement of the magneto elements is conducive to simplicity of manufacture. The flywheel together with the ring 100 supporting the permanent magnet 103 forms one unit, which is easily assembled upon the crank shaft 36, and the plate 59 or support carrying the magneto armature and windings and the terminals leading to the timer and spark plug forms another unit which may be easily attached to the crank case cover 26.

While the form of mechanism herein shown and described constitutes a preferred embodiment of one form of the invention, it is to be understood that other forms might be adopted and various changes and alterations made in the shape, size and proportion of the elements therein without departing from the spirit and scope of the invention.

What I claim is as follows:

1. In a device of the kind described, the combination with an engine comprising a flywheel cooling fan; of means carried by the engine frame and flywheel fan adapted to cooperate to form a housing within the flywheel fan; and a magneto-generator having stator and rotor elements carried within said housing by the engine frame and flywheel fan respectively.

2. In a device of the kind described, the combination with an internal combustion engine comprising a flywheel fan; of a magneto-generator including a stator and a rotor; a housing mounted on the flywheel and adjacent the engine frame, said rotor being carried by the flywheel within the housing and a support for the stator mounted on the engine frame adjacent the flywheel, said housing and support cooperating together to provide an enclosure for the magneto generator while permitting the passage of air through the fan.

3. In a magneto ignition system, the combination with an internal combustion engine having air cooling provisions including a jacket providing an air passage opening out adjacent one end of the engine frame, and a flywheel provided with peripherally arranged blades and located adjacent said jacket opening; of a magneto generator including a stationary armature and a movable magnet; a circular plate supported by the engine frame adjacent said jacket opening and providing an annular air passage communicating with the fan blades, said plate supporting the magneto armature; and a ring mounted upon the flywheel for supporting the magnet and extending adjacent to the plate to cooperate therewith to provide a magneto housing, said ring serving also to direct air currents to the fan blades.

4. In a magneto ignition system, the combination with an internal combustion engine having air cooling provisions including a jacket providing an air passage having a circular opening adjacent one end of the engine frame, and a flywheel provided with peripherally arranged blades and located closely adjacent to said circular jacket opening; of a magneto-generator including a stationary armature and a movable magnet; means for supporting the magnet by the flywheel; an armature support carried by the engine frame adjacent said jacket opening; and a high tension conductor connected with the armature and detachably secured to said armature support and extending within said jacket opening and thence out through said jacket.

5. In a magneto-ignition system, the combination with an internal combustion engine having a cup-shaped flywheel fan located adjacent one end of the engine frame; of a magneto-generator including a stationary armature and a movable magnet; means for supporting the magnet within the flywheel fan; a plate supported by but spaced from the engine frame and permitting the circulation of air therebetween, said plate supporting the magneto armature within the flywheel fan, and provided with an aperture; and a high tension conductor extending between the plate and engine frame and having a connection with the armature through said aperture.

6. In a magneto ignition system, the combination with an internal combustion engine having a flywheel fan located adjacent one end of the engine frame; of a magneto-generator including a stationary armature and a movable magnet; means for supporting the magnet upon the flywheel fan adjacent the engine frame; a plate supported by but spaced from the engine frame and permitting the circulation of air therebetween, said plate supporting the magneto armature adjacent said magnet, and provided with an aperture; and a high tension conductor extending between the plate and engine frame and having a connection with the armature through said aperture.

7. In a magneto ignition system, the combination with an internal combustion engine having a flywheel located adjacent one end of the engine frame; of a magneto-generator including a stator and a rotor; means for supporting the rotor upon the flywheel adjacent the engine frame; a plate supported by but spaced from the engine frame and supporting the stator adjacent said magnet, and provided with an aperture; and a high

tension conductor extending between the plate and engine frame and having a connection with the armature through said aperture, said connection including a nonconducting plug for said aperture attached to said conductor and provided with a recess enclosing a conductor, and including a block projecting into said recess and provided with a conductor attached to said armature and contacting with said plug conductor.

8. In a magneto ignition system, the combination with an internal combustion engine having a flywheel located adjacent one end of the engine frame; of a magneto-generator including a stator and a rotor; means for supporting the rotor upon the flywheel adjacent the engine frame; a plate supported by but spaced from the engine frame and supporting the stator adjacent said magnet, and provided with an aperture; and a high tension conductor extending between the plate and engine frame and having a connection with the armature through said aperture, said connection including a nonconducting recessed plug for said aperture attached to said conductor by means of a fastening having a head located within said recess, and including a block attached to said armature and carrying a spring electrically connected with said armature and adapted to cooperate with said fastening head; and means for detachably securing said plug upon said plate with the block extending into the plug recess.

9. In a device of the kind described, in combination, an engine having a crank case provided with a removable end wall; a flywheel cooling fan for the engine supported for rotation adjacent said removable end wall; means carried by said removable end wall and flywheel fan adapted to cooperate to form a housing within the flywheel fan; and a generator having stator and rotor elements carried within said housing by the removable end wall and flywheel fan respectively.

In testimony whereof I affix my signature.

CHARLES F. KETTERING.

Witnesses:
MILDRED PEARE,
MARY LAYTON.

Aug. 21, 1923. 1,465,644

C. F. KETTERING ET AL

IGNITION APPARATUS

Original Filed Oct. 4, 1915

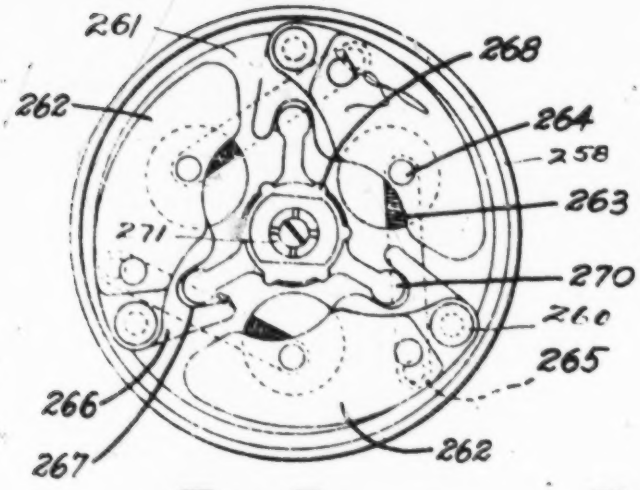

Fig. 2.

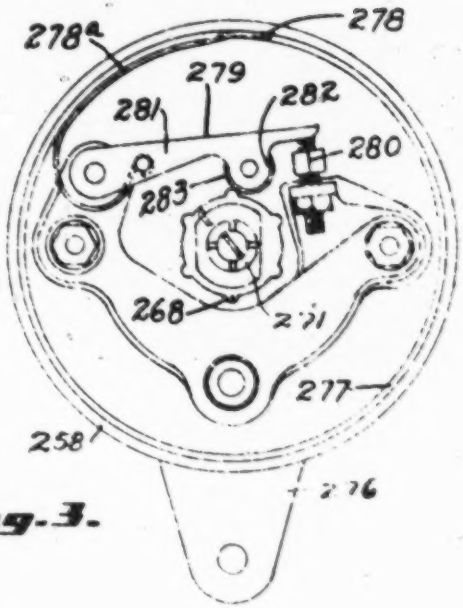

Fig. 3.

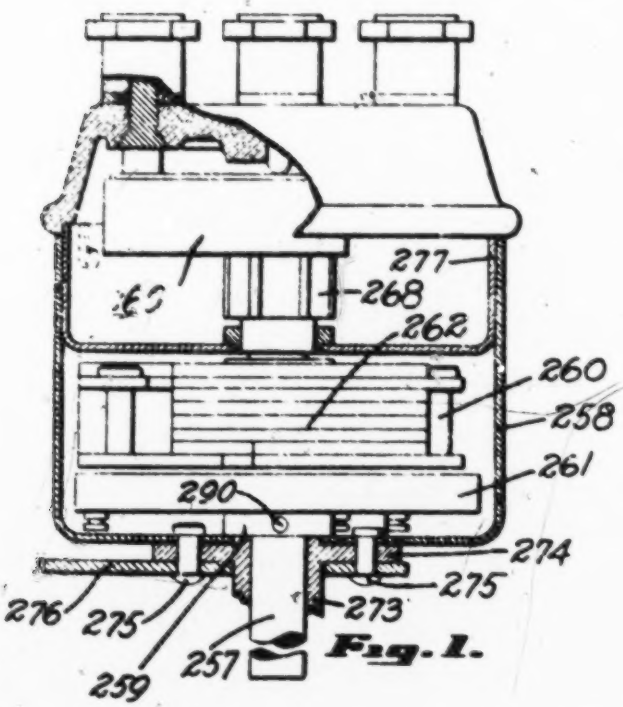

Fig. 1.

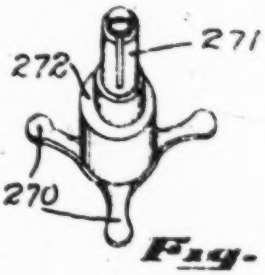

Fig. 4.

Fig. 5.

Witnesses
Walter H. Riedel
Warren Schmieding

Inventors
Charles F. Kettering
William A. Chryst
By Kerr, Page, Cooper & Hayward.
Attorneys.

Patented Aug. 21, 1923. 1,465,644

UNITED STATES PATENT OFFICE.

CHARLES F. KETTERING AND WILLIAM A. CHRYST, OF DAYTON, OHIO, ASSIGNORS TO THE DAYTON ENGINEERING LABORATORIES COMPANY, A CORPORATION OF OHIO.

IGNITION APPARATUS.

Original application filed October 4, 1915, Serial No. 55,160. Divided and this application filed September 16, 1918. Serial No. 254,175.

To all whom it may concern:

Be it known that we, CHARLES F. KETTERING and WILLIAM A. CHRYST, citizens of the United States, residing at Dayton, county of Montgomery and State of Ohio, have invented certain new and useful Improvements in Ignition Apparatus, of which the following is a full, clear, and exact description.

This invention relates to ignition timing and distributing devices for internal combustion engines and the like, and particularly to the type of apparatus disclosed in our patent No. 1,303,831, dated May 13, 1919, of which this application is a division.

One of the objects of this invention is to provide an ignition unit, wherein the time of occurrence of the sparking impulses in the ignition circuits may be automatically controlled, or may be manually or mechanically controlled, as may be desirable.

It is a further object of the present invention to combine the automatic control of the ignition system in such a manner that this type of control will automatically actuate the timer cam, and the rotor of the distributor, by the movement of these parts, relative to the timer contacts and the distributing contacts, respectively, in combination with a manually operated control which is arranged to actuate the timer contacts and the distributor contacts, relative to the timer cam and the rotor of the distributor.

A further object is provide an ignition timing and distributing unit in which the construction is greatly simplified in order to reduce the amount of material and the cost of manufacture.

A further object is to provide an ignition timing and distributing unit in which the construction has been standardized in order that many parts will be common to a series of such units which may differ from one another in order to suit the requirements of different engines.

Further objects and advantages of the present invention will be apparent from the following description, reference being had to the accompanying drawing, wherein a preferred embodiment of the present invention is clearly shown.

In the drawings:—

Fig. 1 is a view in elevation of a timing and distributing unit for the ignition system embodied in the present invention, certain of the parts of this unit being shown in section for the sake of clearness.

Fig. 2 is a top plan view of the unit disclosed in Fig. 1, with the distributor head and the casing, carrying the timer contacts and rotor of the distributor, removed to more clearly disclose the centrifugal governor or control.

Fig. 3 is a top plan view similar to Fig. 2, with the casing carrying the timer contacts and showing the timer cam in position.

Figs. 4 and 5 are detail views of certain of the elements embodied in the ignition unit.

By referring to the drawings, it will be seen that a shaft 257 extends into a casing 258, but this shaft is operable relative to said casing, and is not connected thereto. The shaft 257 may be termed the driving shaft of the ignition unit, but it is not thought necessary to describe or illustrate the driving connections between this shaft and the engine actuated parts, inasmuch as these connections are clearly described in our patent No. 1,229,754, dated June 12, 1917.

This shaft is pinned to a collar 259, by means of the pin 290, said collar being formed integral with or secured to the disc 261. This disc or plate 261 carries a plurality of pins 260, which form pivotal mountings for weight elements 262, see Figs. 1 and 2 particularly. Each of these weights is preferably made up of a number of different punchings or formed pieces, as is clearly shown in Fig. 1, but, of course, may be made of a single solid piece if so desired.

By using fabricated weight elements formed by a series of punchings, it is possible to vary the mass of the weight elements simply by varying the number of punchings. Therefore in constructing ignition units to meet different engine requirements, the weight members employed can be constructed from punchings of the same size.

The free ends of the respective weight elements are connected to the disc 261, by

means of the resilient or flexible connections 263, which in the present instance constitute coil springs. One end of each of these springs is secured to a pin 264, carried by the weight elements, while the opposite ends of said springs are connected to points 265, which are carried by the disc 261. These springs normally maintain the weights in what may be termed closed position. Each of the weight elements are provided in turn with a flanged portion or bottom plate 266, provided with a notch 267, which is adapted to receive an arm 270 of the spider 272, see Figs. 2 and 4.

This spider forms the carrying element for the timer cam 268, and the rotor 269 of the distributor.

By referring to Fig. 3, the relative location of the timer cam 268 and the timer contacts is clearly shown, while in Fig. 1, the relative location of the rotor of the distributor and the distributor contacts is clearly shown.

The spider 272, shown in detail in Fig. 4, comprises a plurality of arms 270, so spaced as to readily engage within the notches 267 formed in the weights 262, each of these arms having an enlarged rounded end portion to snugly fit within the notch formed in the weight, and still readily permit movement of the weight relative to the arm. This spider is connected to the driving shaft 257 solely by its connection above described, with each of the weight elements 262.

The upper end of the spider is provided with a reduced portion 271, which carries the timer cam 268 and the rotor of the distributor, as described hereinafter.

The casing 258 which contains the elements heretofore described, and through which the shaft 257 passes, is provided with a sleeve 273 having a flange portion 274, said sleeve surrounding the shaft 257 and being connected to the casing 258, by means of fastening bolts or rivets 275, which also secure a suitable handle or operating rod 276 rigidly to the casing.

From the above description, the operation of the device shown in Figs. 1 to 5 inclusive, will be as follows:

When the engine or other driving means actuates the shaft 257, the disc 261, the weight elements 262 and the spider 272 which carries the timer cam and rotor of the distributor will all turn the rod concomitantly with the shaft 257.

Now, as the speed of this shaft increases, which of course is the equivalent to the speed of the engine increasing, the weight elements 262, under the effect of centrifugal force, will tend to fly apart, against the tension of the springs 263. The movement of the weights 262, due to the effect of centrifugal force, will be transmitted to the timer cam and rotor of the distributor, through the connection of the weights with the spider element 272.

It will therefore be seen that as the weights move outwardly, the timer cam will be moved relative to the timer contacts and will therefore effect an advance in the time of closing the primary circuit of the ignition system, and inasmuch as the rotor of the distributor is carried by the same member as the timer cam, the time of closing the secondary circuits by the operation of the rotor of the distributor, relative to the distributor contacts, will be advanced or moved in exactly the same proportion as the timer cam.

However, it will be appreciated that under certain conditions, it may be desirable to manually control the time of occurrence of the sparking impulses, and in the present instance, this is effected by connecting the casing which carries the distributor contacts and the timer contacts with a controlling member which may be readily actuated by the operator, to advance or retard the time of occurrence of the sparking impulses.

The timer contacts are mounted within a cup 277, which fits within the casing 258, and is secured thereto in any suitable manner by means of a bayonet joint construction. This cup is prevented from movement relative to the outer casing, not only by means of this bayonet joint construction, but also by providing a spring 278a, one end of which projects through an opening formed in this inner casing, pressing against the inner face of the outer casing as at 278. The opposite end of said spring is connected to the movable contact element 279, which is adapted to be moved into and out of contact with the fixed contact 280, and thereby controls the making and breaking of the primary circuit of the ignition circuit.

This movable contact element comprises a plate 281, formed to provide a pair of lugs 282, between which the contact roller 283 is suitably positioned. From the above, it will be seen that the spring 278a not only tends to prevent relative movement between the cup 277 and the outer casing 258, but it also tends to maintain the movable contact plate 281 in engagement with the stationary contact point 280, except when the same is actuated by the lobes of the timer cam.

By providing a timer cup which is readily removable from the timer casing, repair and replacement of units and parts of the apparatus are facilitated.

While the form of mechanism herein shown and described constitutes a preferred form of embodiment of the present invention, it is to be understood that other forms might be adopted, all coming within the scope of the claims which follow:

1. In an ignition timer, the combination with a casing and a drive shaft supported for rotation thereby; of a disc mounted on

said shaft; a plurality of laminated weight members pivotally mounted on said disc, each weight member having a bottom plate adjacent the disc provided with a notch and other plates mounted on said bottom plate; springs restraining movement of the weights located below the disc; a cam support mounted for rotation within the casing and having arms located in the plane of the bottom plates of the weight members, each arm being received by one of said notches; a timer cam mounted on the cam support above the weight members; breaker mechanism controlled by the cam; and a support for the breaker mechanism located between the cam and weights.

2. In an ignition timer, the combination with a casing and a drive shaft supported for rotation thereby; of a disc mounted on said shaft; a plurality of weight members pivotally mounted on said disc, and each provided with a notch located below the top surface of the weight; springs for restraining movement of the weights located below the disc; breaker mechanism located above the weights; a support for said mechanism located closely adjacent the weight members; a cam support including arms cooperating with said notches and rotatably mounted within the casing; and a cam mounted on the cam support above the breaker support.

3. In an ignition timer, the combination with a casing and a drive shaft supported for rotation thereby; of a disc mounted on said shaft; a plurality of weight members mounted on said disc; springs for restraining the weight members; a breaker support located above the weight members; a bearing mounted on the breaker support; a cam support cooperating with the weight members below the breaker support and journalled upon said bearing; a cam mounted on the cam support above the breaker support; and breaker mechanism mounted on said breaker support; said breaker support being removable from the casing without disturbing the weights and springs, and carrying with it the cam and cam support all in assembled relation.

In testimony whereof we affix our signatures.

CHARLES F. KETTERING.
WILLIAM A. CHRYST.

Witnesses:
J. W. McDONALD,
GRIER MARÉCHAL.

July 19, 1927. W. F. SMITH 1,636,017

MAGNETO

Filed Dec. 5, 1924 3 Sheets-Sheet 1

Fig. 1.

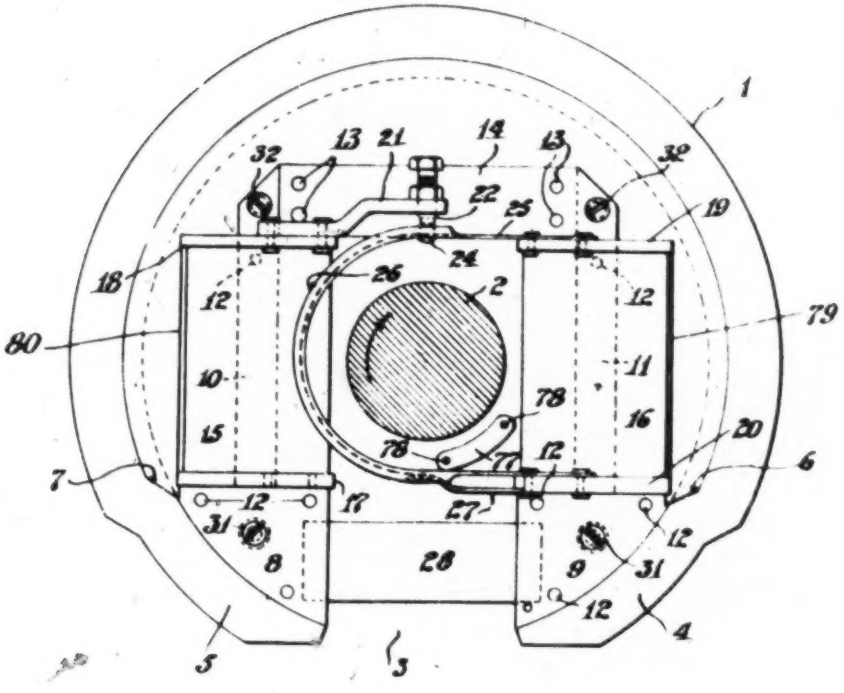

Fig. 2.

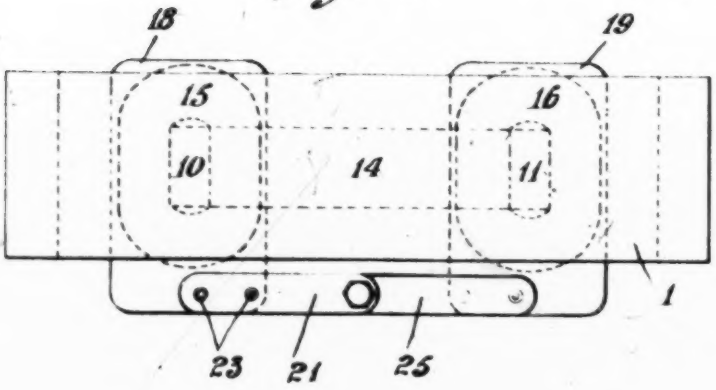

INVENTOR
W. F. Smith
BY Paul Holcomb
his ATTORNEY

July 19, 1927. 1,636,017

W. F. SMITH

MAGNETO

Filed Dec. 5, 1924 3 Sheets-Sheet 2

Fig. 3.

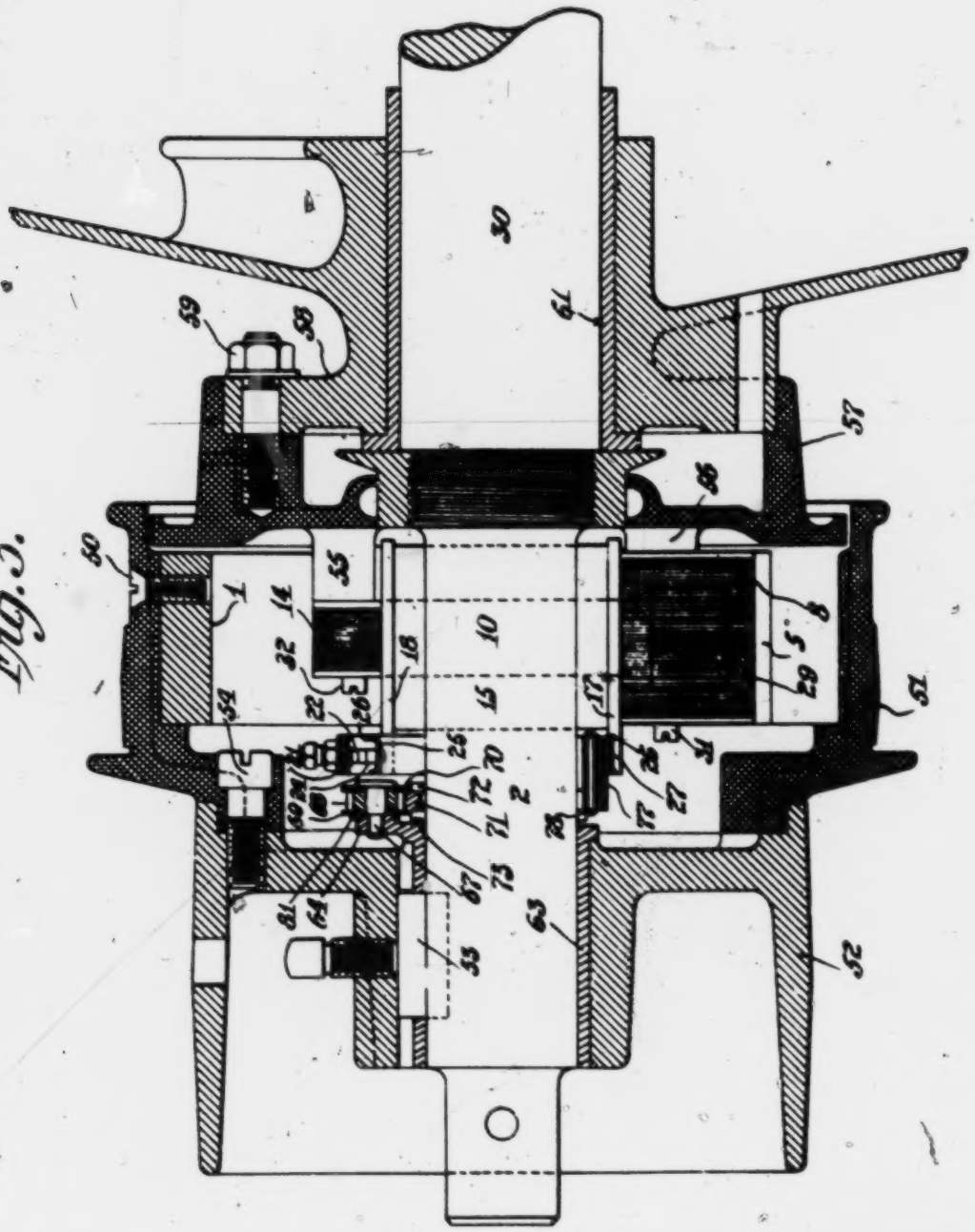

INVENTOR
W. F. Smith
BY
ATTORNEY

July 19, 1927. 1,636,017

W. F. SMITH

MAGNETO

Filed Dec. 5, 1924 3 Sheets-Sheet 3

Fig. 4.

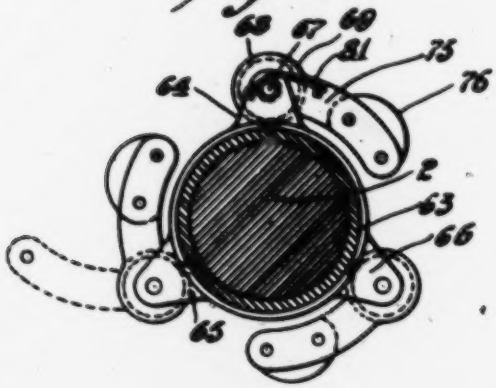

Fig. 5.

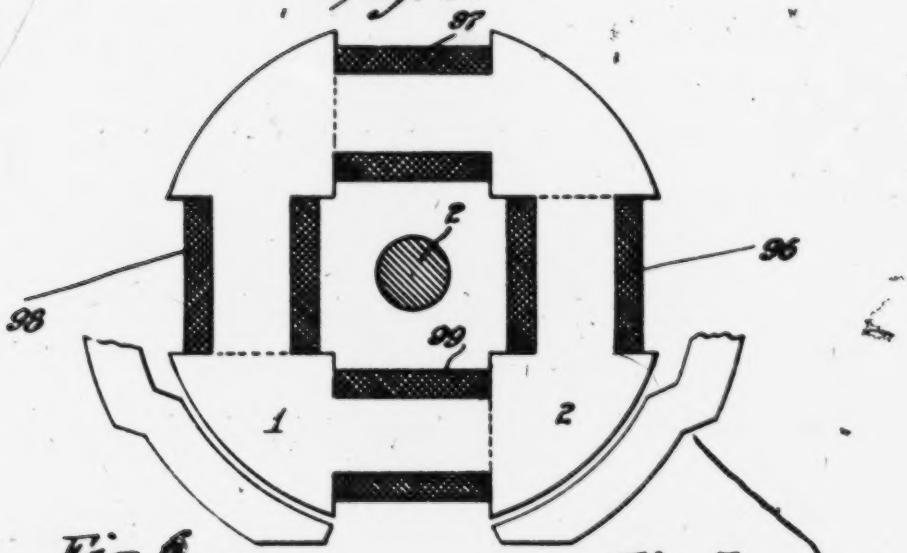

Fig. 6.

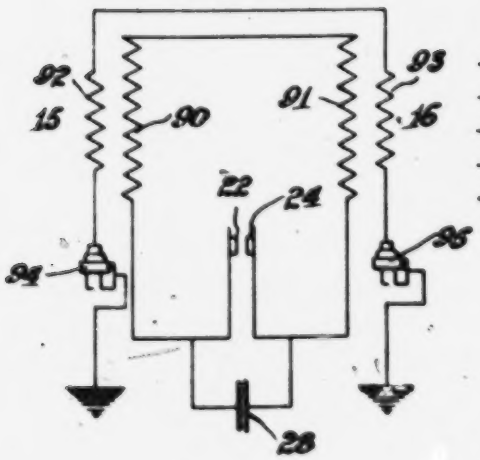

Fig. 7.

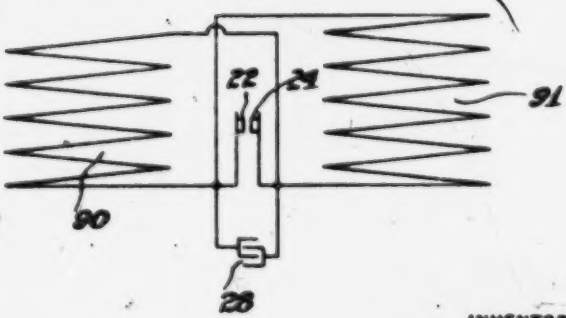

INVENTOR
W. F. Smith
BY
his ATTORNEY

Patented July 19, 1927. 1,636,017

UNITED STATES PATENT OFFICE.

WILLIAM F. SMITH, OF POUGHKEEPSIE, NEW YORK, ASSIGNOR OF ONE-HALF TO HERMAN A. SCHAFF, OF POUGHKEEPSIE, NEW YORK.

MAGNETO.

Application filed December 8, 1926. Serial No. 753,114.

This invention relates to improvements in magneto-electric generators adapted for a variety of uses, though more particularly constructed to be employed in conjunction with internal combustion engines.

The purpose of the present invention is to provide a magneto of compact and sturdy construction and adapted to operate as an efficient ignition apparatus for internal combustion engines. The various features of the invention have to do with the construction of the magnet and armature structures and their mounting on a crank-shaft extension of an internal combustion engine, an improved automatic ignition timing means, and other features described in the following detailed description and the appended claims. The invention is disclosed as applied to the crank-shaft of a single cylinder internal combustion engine and a tractor propelled by it described and claimed in my copending applications, Serial Nos. 722,360 and 715,536, filed June 26, 1924 and May 23, 1924, respectively. It will be obvious, however, to those skilled in the art that the various features of the invention are capable of a wide variety of different uses without departing from its spirit.

The preferred embodiment of the invention is illustrated in the drawings in which Fig. 1 is a plan view of the magneto structure; Fig. 2 is a sectional view along lines 2—2 of Fig. 1; Fig. 3 illustrates in vertical cross-section the magneto mounted on an extension of the crank-shaft of an internal combustion engine; Fig. 4 is an enlarged view of the spark advance controlling mechanism; Fig. 5 illustrates in plan view a modified structure; and Figs. 6 and 7 are illustrations of two circuit diagrams adapted for use in conjunction with the magneto.

Referring now to Figs. 1 and 2 of the drawings, a substantially circular permanent magnet 1 mounted on an extension 2 of the crank-shaft is arranged to rotate therewith in the direction of the arrow. The ends of the permanent magnet 1 are separated by an air-gap 3, these ends being formed into polepieces 4 and 5. Instead of attaching separate polepieces to the permanent magnet 1, the ends of the magnet are upset at 6 and 7, raising the inner faces of the polepieces 4 and 5 into close proximity with pole heads 8 and 9 of the armature cores 10 and 11. The laminated pole heads 8 and 9 form a unitary structure with the cores which are built up of iron laminations in the form of stampings of a contour clearly illustrated in Fig. 1. The laminations are held together by means of rivets 12, and the upper ends of the core laminations are dove-tailed into the ends of a laminated yoke 14. The laminations of the yoke are riveted together at 13.

Coils 15 and 16, each comprising primary and secondary windings, surround the cores 10 and 11. The coils are provided with spool heads 17, 18 and 19, 20 of insulating material. A bracket 21 carrying an adjustable contact point 22 is riveted to the spool head 18 at 23. The contact 22 cooperates with contact 24 carried by a leaf spring 25, the two ends of which are riveted respectively, to the spool heads 19 and 20. The spring 25 has two upturned flanges 26 to give it rigidity, the spring being normally pressed with its contact 24 into engagement with the contact 22 by means of a leaf spring 27 riveted to the under side of the spool head 20. A condenser 28 is held between the pole heads 8 and 9 within recesses such as 29 provided by cutting away portions of some of the laminations that go to make up the pole heads 8 and 9.

Referring now to Fig. 3, the manner in which the magneto is mounted on an extension 2 of the crank-shaft 30 of an internal combustion engine will be explained. The permanent magnet 1 is held by means of screws like 50 against a casting 51 of aluminum or other non-magnetic material which in turn is secured by means of screws like 54 to a casting 52 keyed to the shaft 2 at 53. The castings 51 and 52 (the outside surface of the latter serving as a belt-drive) rotate therefore with the shaft 2. The armature core is fastened by means of screws 31 and 32 into bushings 55 and 56 projecting from a casting 57 of non-magnetic material. The screws project through the pole heads 8 and 9 and the ends of yoke 14. The casting 57 is rigidly held against the crank-shaft casing 58 by means of bolts like 59. The casing 58 is stationary with respect to shaft 30 which is free to rotate within a sleeve bearing 61 provided in the casing. It should be noted in this connection that the whole magneto structure is made accessible for inspection or repair simply by removing casting 52 without dismantling the internal combustion engine.

The key 53 serves also to fasten to the

shaft 2 a sleeve 63 from the end of which project three brackets 64, 65 and 66 (see Fig. 4). Each bracket carries a pin 67 on which is mounted between two guides 69 and 70 a pinion 68. The guides project beyond the teeth of the pinions 68 and hold against lateral displacement a gear 71 provided around the shaft 2. The gear 71 is provided with shoulders 72 and 73 against which the ends of the guides 69 and 70 abut. There is a clearance between the shaft 2 and the gear 71 and the latter is supported only by the three pinions 68 intermeshing therewith. Each guard of the pinions 68 is provided with an arm 75, and a weight 76 is carried between the ends of each pair of arms. A cam 77, built up of fibre or other insulating laminations and adapted to engage the spring 25 is fastened to the gear 71 by means of rivets 78.

During the rotation of the shaft 2 the casting 51 is caused to rotate with the permanent magnet 1, the polepieces 4 and 5 of which, in passing by the pole heads 8 and 9 of the armature cause, in the well-known manner, the magnetic flux to pass through the core 10, 11 and yoke 14, and this in turn results in the generation of alternating current fluctuations in the secondary windings, and by induction, with primary windings of coils 15 and 16. The pole pieces 4 and 5 are so dimensioned that they span the gap 3 between the pole heads 8 and 9, whereby the magnetic flux is short-circuited twice during each revolution of the permanent magnet 1. Inasmuch as the electrical characteristics of such magneto structures are well known in the art, their description will be dispensed with. It should be noted, however, that owing to the type of magnet structure used, losses which result from interruptions in the magnetic circuit when separate polepieces are fastened to the ends of the permanent magnet are entirely avoided by forming the polepieces 4 and 5 homogeneously with the magnet 1. The magnet 1 and the armature structure being rigidly mounted on heavy castings, the maintenance of a very narrow air-gap between the polepieces and the pole heads is insured. In order to prevent the setting up of an opposing flux through the cores 10 and 11 when one polepiece of the permanent magnet 1 passes by a pole head and the other polepiece by the upper end of the core (see Fig. 1 in which the path of the polepieces is indicated in a dotted circle), iron shields 79 and 80 are provided. These shields are in the form of strips, the ends of which are fastened to the spool heads 17, 18 and 19, 20, respectively, and serve to afford a shunt path for the magnetic flux when the polepieces 4 and 5 pass near the ends of such shields.

The sleeve 63 being also rotated with the shaft 2 will drive the gear 71, through the agency of the three pinions 68, at the same rate of speed as the shaft is rotated, and each time that the cam 77 engages the spring 25 at or near the point where it is pressed upward by the leaf spring 27, it will force these springs down, causing the opening of the primary circuit in contacts 22 and 24.

The arms 75 are normally held down by means of springs 81 wound around the heads of the brackets 64, 65 and 66 and having their ends attached to the arms 75 and brackets 64, 65 and 66, respectively. When the speed of rotation of shaft 2 is increased then owing to the centrifugal action of the weight 76, the arms 75 will be moved into or towards the positions indicated in dotted lines in Fig. 4. Such movement of an arm 75 will cause the associated pinion 68 to rotate, which movement is transmitted to the gear 71. The gear 71 is thus caused to advance in addition to the above described rotary motion normally imparted by the pinions, whereby the cam 77 will engage the spring 25 at a point to the left of the one indicated in Fig. 1. Depending, therefore, on the speed at which the shaft 2 is rotated, i. e., on the speed of the internal combustion engine the opening of the primary circuit is automatically timed to occur at more or less advanced positions of the crank-shaft and therefore of the piston or pistons carried by this shaft.

The automatic spark advance arrangement is provided in a manner to make possible a simple and compact arrangement. The gear 71 being out of contact with shaft 2, oiling of the parts which would detrimentally affect the electrical contacts is avoided. Furthermore, the predetermined setting of gear 71 and the pinions 68 is not disturbed by wear, as would be the case if some solid coupling were provided between the shaft and the gear. Another important feature of this arrangement consists in that the relative adjustments of the armature and magnet are not interfered with by its operation.

The electrical circuit connections may be provided in any one of a plurality of suitable combinations. Fig. 6 illustrates a circuit in which the primary coils 90, 91 are connected in series with the interrupter springs 22, 24, the latter being shunted by means of condenser 28 to eliminate sparking. The secondary coils 92, 93 are also connected in series and each with one electrode of spark plugs 94 and 95 the other electrodes of these plugs being grounded.

In the circuit diagram illustrated in Fig. 7, the primary coils 90 and 91 are connected in parallel with each other and with the contacts 22 and 24.

Fig. 5 illustrates the manner in which four coils 96, 97, 98 and 99 may be mounted in the structure herein disclosed, the dotted lines indicating where the cores and pole

heads of adjacent coils come in contact with each other.

What I claim is:

1. In a magneto, a shaft, means for rotating said shaft at varying speeds, a magnet carried by said shaft, a stationary armature, contacts in the armature circuit, and means comprising a gear and pinion responsive to the speed at which said shaft rotates for opening said contacts in different rotary positions of said shaft.

2. In a magneto, a shaft, means for rotating said shaft at varying speeds, a stationary armature, contacts in the armature circuit, a gear rotating at the speed of said shaft but free to revolve with respect thereto, a cam carried by said gear for opening said contacts, and means responsive to the speed at which said shaft rotates for causing said gear to revolve independently of said shaft.

3. In a magneto, a shaft, means for rotating said shaft at varying speeds, a stationary armature, contacts in the armature circuit, a pinion carried by said shaft and revolving therewith, means responsive to the speed of said shaft for rotating said pinion relative to said shaft, a gear intermeshing with said pinion, and a cam carried by said gear for actuating said contacts.

4. In a magneto, a shaft, means for rotating said shaft at varying speeds, a stationary armature, contacts in the armature circuit, a rotating element, a cam carried thereby for actuating said contacts, another element fastened to said shaft and in operative contact with said rotating element, and means responsive to the speed of said shaft for rotating said other element to displace said rotating element.

5. In a magneto, a rotating shaft, a magnet carried thereby, an armature including a primary and a secondary winding, contacts in the circuit of said primary winding three pinions fastened to said shaft, a gear supported by and intermeshing with said pinions, and means carried by said gear for actuating said contacts.

6. In a magneto, a rotating shaft, a substantially circular permanent magnet surrounding said shaft and carried thereby, a stationary armature including a primary and a secondary winding surrounded by said magnet, contacts in the circuit of said primary winding, a sleeve fastened to said shaft, three brackets radially projecting from said sleeve, a pinion carried by each bracket, two guard plates of larger diameter than said pinions mounted on each pinion, eccentric weights carried by said guard plates, springs normally forcing said weights towards said shaft, a gear provided with lateral shoulders surrounding said shaft but free thereof, the teeth of said gear being in mesh with the teeth of said three pinions and said gear being held against lateral and vertical displacements by the edges of the guard plates engaging the shoulders on said gear, a leaf spring bent in a semi-circle and held at both ends carrying one of said contacts, and a cam fastened to said gear and adapted to engage said spring at any one of a plurality of points to cause the separating of said contacts.

7. In a magneto, an operating shaft, means for rotating said shaft at varying speeds, an armature circuit, contacts in said circuit, a cam arranged to open said contacts during each revolution of said shaft, and means comprising a gear and pinion responsive to the speed at which said shaft rotates for causing said cam to actuate said contacts in varying angular positions of said shaft.

8. In a magneto, a magnet, an armature comprising a core and a coil mounted thereon, insulating spool heads for said coil, a contact in the armature circuit, and a spring carrying said contact fastened with its two ends to said spool heads.

9. In a magneto, a magnet, an armature comprising two coils, spool heads for said coils, two cooperating contacts in the armature circuit, a bent leaf spring carrying one of said contacts fastened with its two ends to two spool heads, and a bracket carrying the other contact fastened to another spool head.

10. In a magneto, a substantially circular permanent magnet the ends of which are upset to form polepieces, a laminated armature core having laminated pole heads in close proximity to said polepieces, two coils each comprising a primary and a secondary winding mounted on said core, spool heads of insulating material for said coils, a leaf spring bent in a semi-circle and having its ends riveted to the spool heads of one of said coils, a contact point carried by said leaf spring, an adjustable contact point cooperating with said first mentioned contact and mounted on a spool head of the other coil, and a cam for actuating said leaf spring.

11. In a magneto, a shaft, a magnet carried thereby, an armature comprising two cores straddling said shaft and surrounded by said magnet, contacts in the armature circuit, a spring carrying one of said contacts partially encircling said shaft, and a cam between said shaft and spring for actuating the latter.

12. In a magneto, a shaft, a magnet carried thereby, an armature comprising two cores straddling said shaft and surrounded by said magnet, contacts in the armature circuit, a leaf spring carrying one of said contacts and partially encircling said shaft beyond the plane of said magnet, a cam between said shaft and spring for actuating

the latter, and means for causing said cam to rotate around said shaft.

13. In a magneto, a substantially circular permanent magnet the ends of which are upset to form polepieces separated from each other, two laminated cores parallel with each other, a laminated yoke interconnecting the cores at one end, laminated pole heads on the other ends of said cores and projecting in close proximity to said polepieces, the distance between said pole heads being such that they may be spanned by a polepiece, a coil on each core comprising a primary and a secondary winding, spool heads of insulating material for said coils, a magnetic shield for each core mounted on the spool heads of the associated coil, a leaf spring bent in a semi-circle and having its ends riveted to the spool heads of one of said coils, a contact point in circuit with said primary windings carried by said spring, an adjustable contact point cooperating with said first mentioned contact, a bracket carrying said adjustable contact fastened to one of the spool heads of the other coil, and a cam for actuating said spring.

14. In a magneto, a rotating shaft, a casing through which said shaft projects, a non-magnetic casting fastened to said casing, two parallel armature cores straddling said shaft mounted on said casting, a second non-magnetic casting overlapping said first mentioned casting and fastened to said shaft, and a permanent magnet attached to said second casting.

15. In a magneto, a magnet, an armature core, a pole head for said core, a recess in said pole head, and a condenser held in said recess.

16. In a magneto, a magnet having two polepieces, an armature comprising two pole heads cooperating with said polepieces, and a condenser held between said pole heads.

17. In a magneto, a magnet having polepieces, an armature comprising two opposite pole heads cooperating with said polepieces, recesses in opposite faces of said pole heads, and a condenser fitted with its two ends in said recesses.

18. In a magneto, a rotating shaft, a casing through which said shaft projects, a disc of non-magnetic material mounted on said casing, armature core mounted on said disc, a second disc of non-magnetic material overlapping said first mentioned disc and fastened to said shaft, and a permanent magnet attached to said second disc.

In testimony whereof, I have signed my name to this specification this 3rd day of December 1924.

WILLIAM F. SMITH.

Nov. 19, 1929. I. E. HENDRICKSON 1,736,441

MAGNETO

Filed Aug. 31, 1928 3 Sheets-Sheet 1

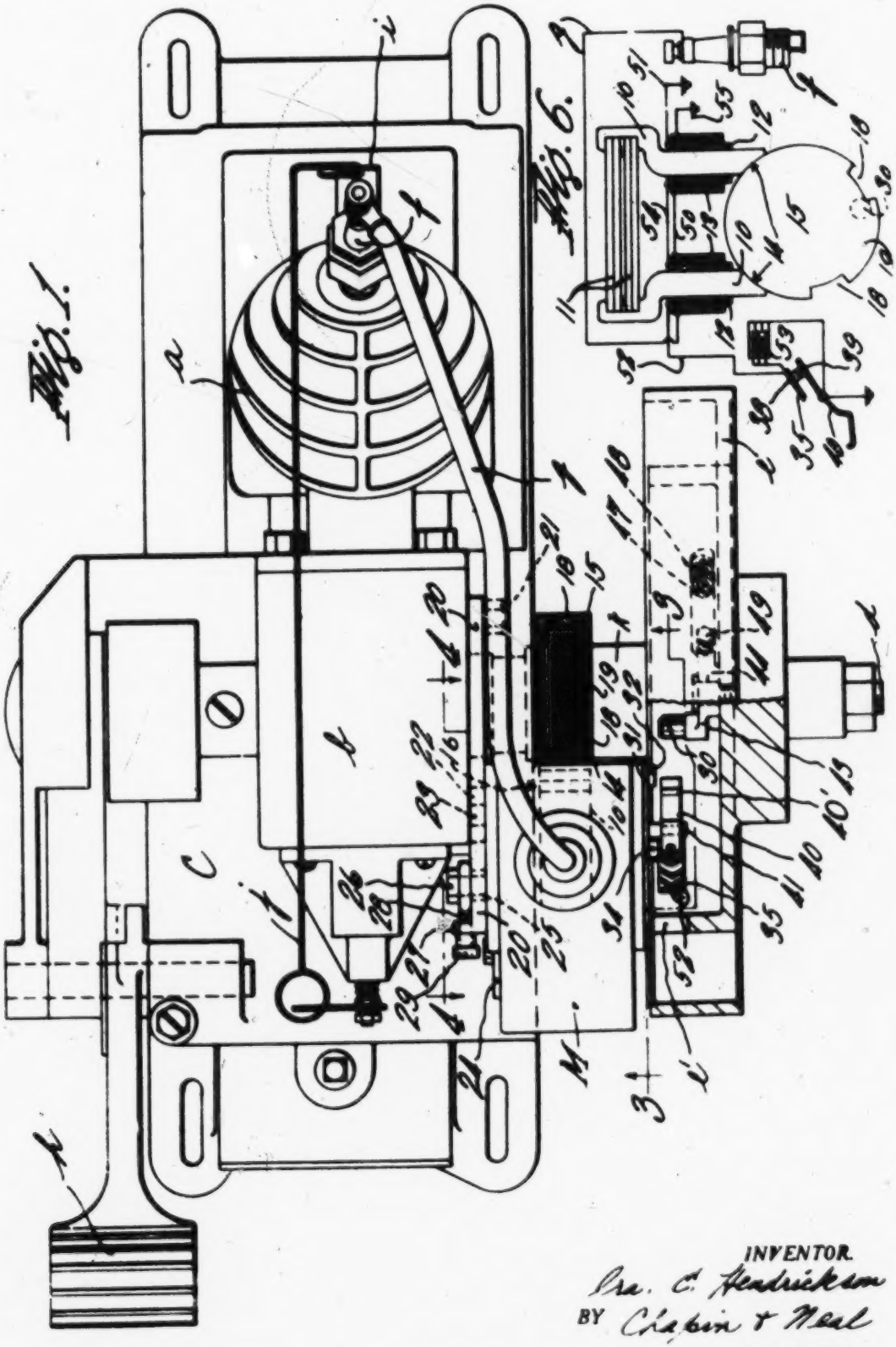

INVENTOR.
Ira. E. Hendrickson
BY Chapin & Neal
ATTORNEYS.

Nov. 19, 1929. I. E. HENDRICKSON 1,736,441

MAGNETO

Filed Aug. 31, 1928 3 Sheets-Sheet 2

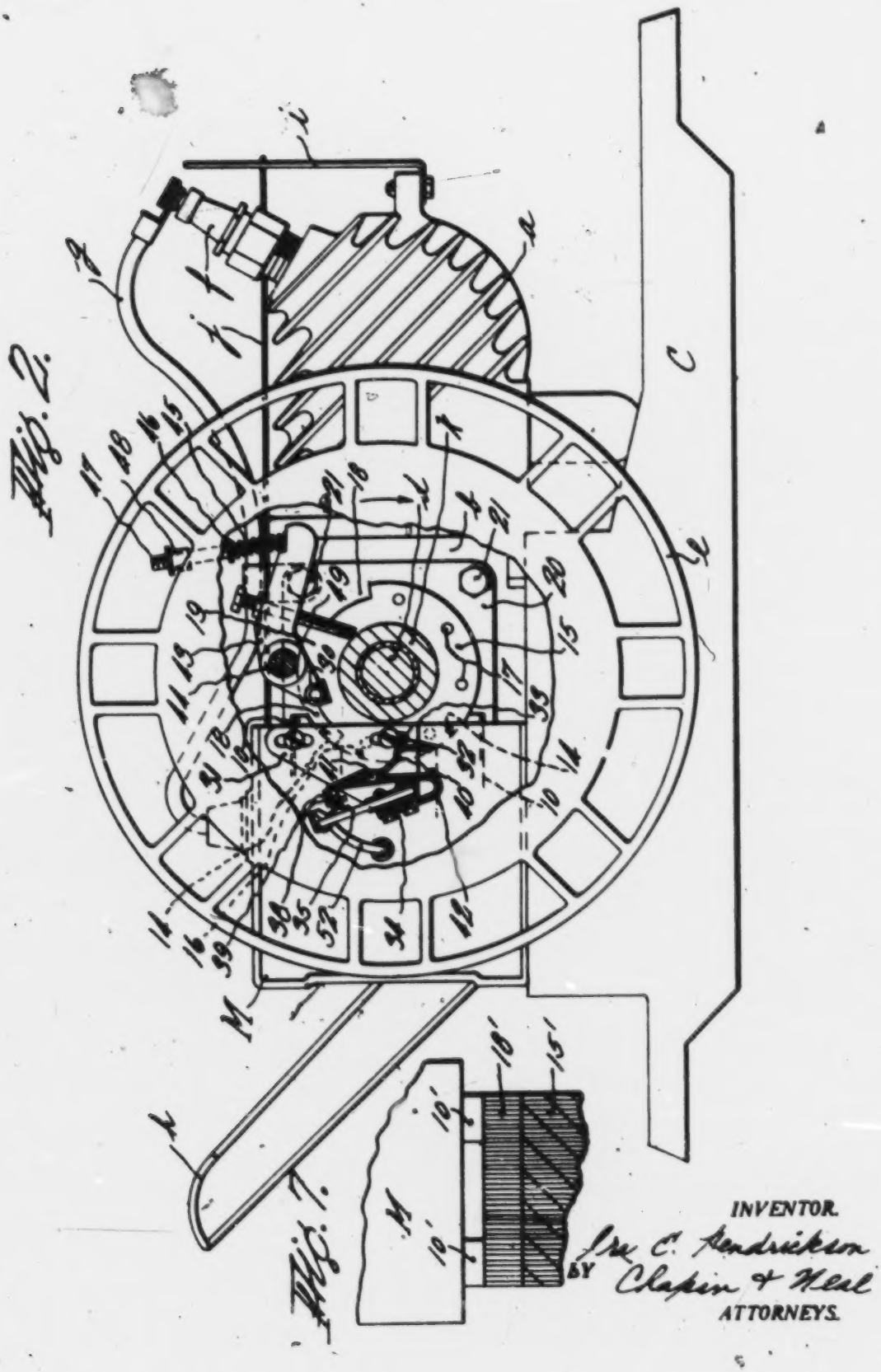

INVENTOR.
Ira C. Hendrickson
BY Clapin & Neal
ATTORNEYS.

Nov. 19, 1929. I. E. HENDRICKSON 1,736,441

MAGNETO

Filed Aug. 31, 1928 3 Sheets-Sheet 3

Fig. 3.

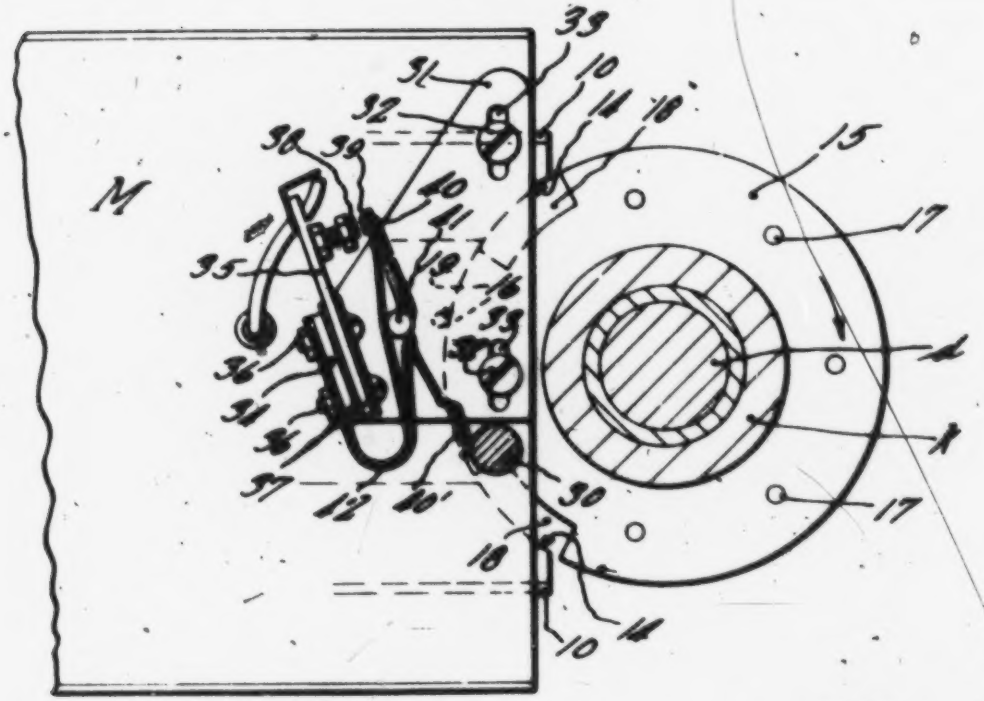

Fig. 4.

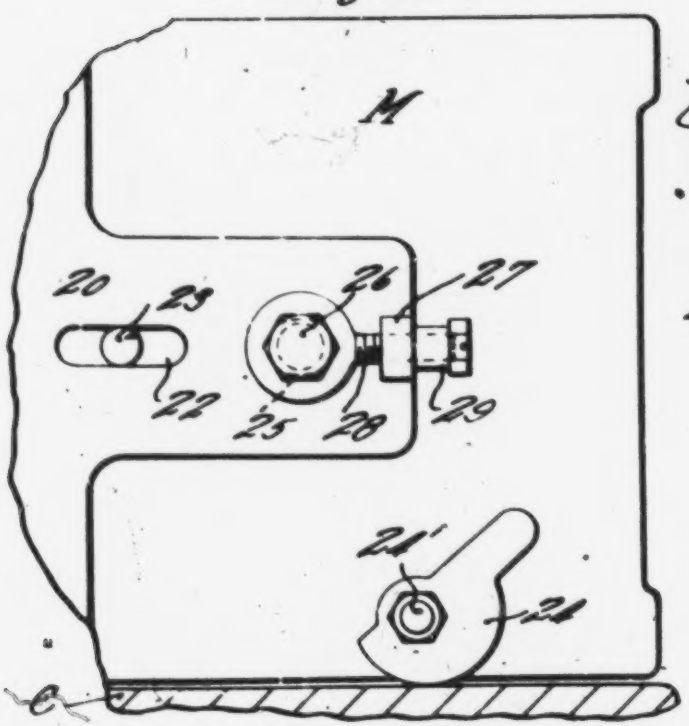

Fig. 5.

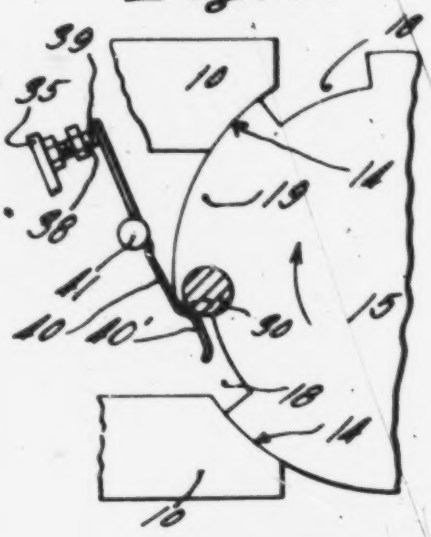

INVENTOR.
Ira C. Hendrickson
BY Clapp & Neal
ATTORNEYS.

Patented Nov. 19, 1929 1,736,441

UNITED STATES PATENT OFFICE

IRA E. HENDRICKSON, OF WEST SPRINGFIELD, MASSACHUSETTS, ASSIGNOR TO WICO ELECTRIC COMPANY, OF WEST SPRINGFIELD, MASSACHUSETTS, A CORPORATION OF MASSACHUSETTS

MAGNETO

Application filed August 31, 1926. Serial No. 303,303.

This invention relates to an improved magneto of the type having an unwound, rotary inductor or armature,—sometimes known as the flywheel type when the flywheel is utilized as the inductor.

The prior art discloses a large number of magnetos of this type, which may for convenience be subdivided into two general classes. In one of these classes, the magnetic field elements,—except for the inductor,—and the generating coils are maintained stationary,—leaving the inductor as the only rotary element. In the other class, the magnets rotate. The only magnetos of the stated type which have had any substantial commercial success, so far as I am aware and have been able to determine, are of the second-named class and these have many disadvantages.

Contrasted with magnetos of the first class, magnetos of the second class are more expensive to manufacture. Also, their use leads to many complications. Usually they must be specially designed for each engine installation and thus "built into" the engine as distinguished from a unitary structure which can be added on to any engine without necessitating special design of engine parts. Long magnets, bent up into substantially circular form, are often used and these are expensive due to the special work in shaping them, as well as to the large amount of material involved. Such magnets have to be surrounded by non-magnetic material, which is more expensive than cast iron. For example, it is common to make the flywheel of aluminum. It is also common to house the magnets, as well as all other parts of the magneto in the flywheel. This practice makes the magneto relatively inaccessible,—difficult to install and difficult to remove when servicing is required. Also, it is not feasible in magnetos of the second class to reduce the clearance between the pole pieces and the inductor to such low limits as is practical in magnetos of the first class and, therefore, the former are less efficient than the latter, other factors being equal.

That there are so many disadvantages to magnetos of the second class has led me to direct my invention entirely to magnetos of the first class, and I seek by the utilization of a less amount of material in a less expensive way to produce better results. In this field, however, there are many troubles to be overcome. The prior art abounds in examples of magnetos of this class, but it is, I believe, a fact that no one of such magnetos has ever met with any substantial degree of commercial success. Something has been lacking in each instance which prevented a commercially successful solution of the problem. At intervals over a long period of years attempts have been made to solve this problem, but no one heretofore has happened to secure just the right combination of elements to admit of results which would bring full commercial success.

My invention is directed to, and has for its general object, the provision of a magneto of the first-named class which satisfies the exacting demands of commercial service. Various good features individually disclosed in the prior art have been retained and other bad features eliminated, and the result is a novel arrangement of elements cooperating in an improved way to produce successful results.

More particularly, I set forth the objects of my invention by stating conditions which I deem necessary to assure successful results in a magneto of the stated type and class. The magnets, cores, and coils should be stationary and assembled as one compact, unitary structure, which can be applied to any engine in a conveniently accessible location and without substantial alterations in the latter. This unit, which should include two magnetic pole pieces, should preferably be mounted for convenient adjustment toward or away from the rotary inductor in order to adjust the clearance between the rotor and pole pieces and, for efficient utilization of the magnetic flux, such clearance should be exceedingly small and as near physical contact as possible. For proper adjustment and maintenance of such clearance, it is essential that both pole pieces should lie on the same side of the engine crankshaft. Due to the lack of actual contact between the arma-

ture and pole pieces, it is essential that the magneto have both primary and secondary coils,—otherwise, the spark produced will be too feeble to satisfy the requirements. The inductor, for maximum efficiency, must provide for a sharp and double break in the magnetic circuit and, so far as is practical, must at other times hold the magnetic circuit closed. A simple form of breaker point mechanism should preferably be used to control the primary circuit, which requires one opening and closing for each cycle of operation of the magneto. These breaker points should normally hold the primary circuit closed and should preferably open at substantially the time when the double break in the magnetic circuit occurs to allow the spark to be produced on breaking, rather than on making, of the magnetic circuit. The breaker points should close shortly thereafter. Preferably, the inductor should be so arranged as to move into position to at least partially complete the magnetic circuit before the breaker points close so that a substantial building up of flux occurs under the favorable condition of an open circuited primary winding. The inductor should hold the magnetic circuit closed as long as possible to hold such flux as has been built up, during the instant that the breaker points are open, and also to allow time for additional building up of the flux, if and when necessary, under the slower and less favorable condition of a closed circuited primary winding.

So far as I am aware there has been no magneto heretofore which will satisfy all these conditions and therein I believe is the reason for the failure of magnetos of this class to attain commercial success.

Perhaps the closest approach to a satisfactory solution of the problem is disclosed in the Clark Patent No. 1,486,229, dated March 11, 1924, which states many of the difficulties encountered in magnetoes of this type and offers as a solution a special quick-opening and quick-closing breaker-point mechanism. Such mechanism leads to complications which I desire to avoid. As distinguished from the Clark patent, I have provided a different type of inductor, which enables me to dispense with the necessity of using his special breaker point mechanism and enables me to utilize one of ordinary construction. At the same time, by so doing, I have secured greatly improved results, in so far as spark output is concerned.

It is another object of my invention to utilize, with comparatively little modification, a magneto of a standard and efficient type, which has met with substantial commercial success, when used with a reciprocating and contacting armature. Such magnetos have for some time been produced in large quantities and are available at low cost. By a slight change in the shape of the polar faces and a change in the breaker point mechanism, this magneto is suitable for use with a rotary inductor. I need, then, to provide merely a simple mounting to support the magneto unit from the engine and to place a rotary inductor on the crank shaft or other suitable rotary part of the engine, in order to equip any engine with a satisfactory rotary inductor type magneto and this can be done at a cost far lower than that of magnetoes of the second-named class, as above defined.

Other objects and advantages will appear from the following description and will be pointed out in the appended claims.

The invention will be disclosed with reference to the accompanying drawings, in which—

Fig. 1 is a plan view, with parts broken away, showing a magneto, embodying my invention, applied to an internal combustion engine;

Fig. 2 is a side elevation view thereof,—a part of the flywheel being broken away to reveal the magneto;

Figs. 3 and 4 are fragmentary sectional views taken on the lines 3—3 and 4—4, respectively, of Fig. 1;

Fig. 5 is a diagrammatical view taken similarly to Fig. 3 but showing a different relative positioning of parts;

Fig. 6 is a diagrammatical view illustrative of the magnetic and electrical circuits of the magneto; and

Fig. 7 is a fragmentary longitudinal sectional view illustrative of a modification.

Referring to Figs. 1 and 2, the invention has been illustrated as applied to a standard type of small internal combustion engine. Such engine, in so far as a description of it is necessary to an understanding of this invention, includes a single cylinder *a*, bolted to a crank case *b*, mounted on a suitable bed plate *c*. The crankshaft is indicated at *d* and carries a flywheel *e* of usual form and material. A spark plug *f* is connected by a high tension cable *g* to the magneto unit M. The pedal *h* is part of the usual mechanism for cranking the engine. To stop the engine, a flexible, metallic arm *i*, secured to cylinder *a* and thereby grounded, is arranged to be flexed and drawn into contact with the terminal of the spark plug *f* by pulling on the wire *j*. The particular engine shown is of the two cycle type. Accordingly, for this particular engine, the magneto is required to produce one spark per revolution. This engine, of course, is merely illustrative of one of many suitable types with which my magneto may be used and other installations may require a different number of sparks per revolution.

The magneto unit M may be of any suitable type embodying a magnetic source and a pair of cores with primary and secondary coils

thereon. Such parts are shown conventionally in Fig. 6, wherein two cores 10, connected one to each polar extremity of a bank of permanent magnets 11, carry primary and secondary coils 12 and 13, respectively, and terminate with polar faces 14 arranged to be engaged by an unwound rotary inductor 15. The unit M, except for the change in shape of the polar faces and a different form of inductor and breaker point mechanism is, or may be, like the magneto disclosed in Brown and Louis Patent No. 1,557,976, dated October 20, 1925, to which reference is made for a more complete disclosure. The parts described are all housed in a casing, as shown in the last named patent, forming a small compact unit easily handled and readily applied to any engine. The standard type of magneto shown in such patent may be used by removing the breaker point mechanism and substituting another later to be described, and by milling or otherwise shaping the lower ends of cores 10, and any intervening part, to conform to the curvature of the inductor. In Figs. 2 and 3 the cores 10 are indicated in part only but sufficiently to show the polar faces 14 and the recess 16 which permits the inductor 15 to rotate in close proximity to such faces.

The inductor 15 is simply a cylindrical body of magnetic material which is built up of circular laminations suitably held together, as by rivets 17, and which is substantially equal in length to the thickness of cores 10. This body is suitably fixed to turn with crankshaft *d*, as by being driven on to the hub *k* of flywheel *e*. The inductor, for the particular engine shown, is provided with two non-magnetic portions 18 which are so spaced as to simultaneously register with the two polar faces of cores 10, as shown in Fig. 3. These portions 18, as shown, are formed by notching the periphery of the inductor, but the prior art shows that notches filled with some metallic and non-magnetic material are equivalents for the purpose. The notches, or non-magnetic portions 18, are preferably a little wider than the polar faces 14 with which they cooperate. Otherwise, the optimum break in the magnetic circuit would not be obtained. The preferred length of each notch 18, relative to that of its polar face, has been shown in Fig. 3, and this has been found to yield the best magnetic break. Notches of any greater length add nothing to the effectiveness of the magnetic break and are bad because they interfere with the building up of flux and lessen the dwell period during which the magnetic circuit is closed, as will appear in greater detail hereinafter.

The effort in the present case has been to cut away as little of the periphery of the inductor as is practical and restrict the length of the non-magnetic portions 18 to the minimum necessary for the proper and most efficient performance of their function. The intervening part 19 is most important and without it successful results could not be obtained because this part, not only adds to the dwell period in which the magnetic circuit is closed, but also enables a substantial part, and it is believed, the larger part of the flux to be built up under the most favorable condition; i. e., before the breaker points close, as will appear in more detail hereinafter. Another important feature is that the notches 18 are spaced apart by an angle less than 180 degrees and therefore both notches lie on one side of the shaft as distinguished from a diametrically opposed relationship of such notches, which would render most difficult the adjustment and maintenance of the clearance between the inductor and polar faces within the small limits sought for in this case.

For the maximum efficiency the polar faces 14 should contact with the inductor and, while it is not feasible to obtain the intimate and actual contact of the inductor with these polar faces, which can be obtained in a magneto of the reciprocating armature type, the object here is to approach that condition as closely as is feasible. To this end, both polar faces 14 are located on the same side of the shaft and provisions are made whereby the unit M may be thrust bodily and in a radial direction to simultaneously carry both polar faces into exceedingly close proximity to the inductor with only what may be termed "rubbing" clearance. Any suitable means may be provided for this purpose.

As shown in Figs. 1 and 2, a plate 20 is suitably secured as by bolts 21 to one side of the crankcase *b* of the engine to serve as a support for the magneto unit M. In plate 20, there is a slot 22 (Figs. 1 and 4) which is disposed horizontally and substantially radially with respect to crankshaft *d*. A stud 23, fixed to the magneto unit M, projects into this slot and closely fits the same. This arrangement allows the magneto unit M to be moved radially in or out with respect to inductor 15 and also to be tilted up or down as may be necessary to bring the polar faces 14 into proper relation with the inductor and with equal clearance. A cam 24 (Fig. 4), fulcrumed at 24′ on the unit M, bears on bed plate *c*, and provides a means for tilting the unit M. The plate 20 also has a second slot, marked 25 through which a cap screw 26 passes. Slot 25 is wide enough to allow enough up or down play of stud 26 therein to enable the vertical adjustment of the unit M by cam 24 to be effected, and is long enough to permit the radial movement described. The outer end of plate 20 has an outwardly turned lug 27 in which the shank of an eyebolt 28 is slidable. The stud 26 passes through the eye of eyebolt 28 as well as through slot 25 and threads into the frame of the magneto unit M. Stud 26 serves to clamp such unit

in adjusted position. A nut 29 threaded on the outer end of the shank of eyebolt 28, serves as a means for drawing the magneto unit M away from the inductors, when stud 26 is loosened. With stud 26 loosened, the unit M is thrust inwardly until magnetic attraction draws the polar faces into contact with the inductor and cam 24 is adjusted to hold the magneto at the proper elevation. The nut 29 is then turned to pull the unit M outwardly just enough to create the very small clearance above described. The means described for effecting the radial and vertical adjustments of unit M are merely illustrative of one of various suitable means which may be used for the stated purposes.

For convenience, I have mounted the breaker point mechanism on the outside of the magneto but in such a manner that it is sheltered by the flywheel, as will be clear from Fig. 1. This location of such mechanism simplifies the character of the means used for controlling its operation, such means being carried by the flywheel *e*, or any other suitable rotary part, and herein taking the form of a roll 30. The breaker point mechanism is mounted on a plate 31, held to unit M by screws 32, which pass through slots 33 in the plate, whereby the mechanism may be bodily shifted to effect changes in the timing of the opening of the breaker points, by causing roll 30 to open them earlier or later in the revolution of crankshaft *d*, accordingly as plate 31 is moved down or up from the position shown in Fig. 3. Pate 31 has an outwardly turned part 34 to which a conducting arm 35 is secured by bolts 36. Arm 35 is suitably insulated from part 34, as indicated at 37, and carries the fixed, but adjustable, breaker point 38. The cooperating breaker point 39 is carried by one end of a lever 40, which is pivotally supported at a point intermediate its ends by a stud 41 secured to plate 31. A spring 42 tends to normally hold points 38 and 39 in contact. The other end of lever 40 is suitably shaped for engagement by roll 30 and preferably, as shown, has a tail 40′, whereby roll 30 will hold the points 38 and 39 open for a short interval. In some cases this tail may be dispensed with, especially where the installation permits time enough for the flux to build up against a closed circuited primary winding.

In this particular case, it is desired to control the speed of the engine by cutting out the ignition after the engine reaches a certain speed. For this purpose roll 30 is carried by one end of a lever 43, fulcrumed at a point intermediate its ends on a stud 44, secured to flywheel *e*. The other end of the lever is relatively heavy and is adapted to be thrown outwardly by centrifugal force but is normally restrained by a spring 45. The latter is interposed between the outer end of the lever and an adjustable abutment 46 carried by a screw 47, threaded into flywheel *e*. A lock nut 48 holds screw 47 in adjusted position. When the engine exceeds the speed, predetermined by adjustment of screw 47, arm 43 will be moved against the force exerted by spring 45 and roll 30 will be moved inwardly so as not to engage the breaker-point lever 40. A screw 49, threaded into lever 43, engages the hub *k* and limits the outward movement of roll 30.

The electrical connections are shown diagrammatically in Fig. 6 and are essentially as disclosed in the Brown & Louis patent, above identified. For example, the primary coils 12 are or may be connected in series by a wire 54 and one terminal of the primary winding is grounded as at 51. The other terminal of such winding is connected by a wire 52 to arm 35 and thus to the fixed breaker point 38. Breaker point 39 is grounded. A condenser 53 is bridged across the breaker points in the usual manner. The secondary coils are, or may be, connected in series by a wire 50 and one terminal of the secondary winding is grounded, as at 55. The other terminal of the secondary winding is connected by wire *g* to spark plug *f*.

The preferred operation of the magneto will next be described with particular reference to Figs. 2, 3, and 5. Assuming that the flux has been built up in the magnetic circuit to the desired intensity, the rotor 15, revolving in the direction of the arrow, will eventually come into the position shown in Fig. 3 and cause an effective and double break in the magnetic circuit. Both notches 18 then register with their respective polar faces 14 and there is a substantial air gap between the upper edge of each radial wall of each notch and the adjacent end edges of the polar faces 14. As set forth above, the notches are made just enough longer than the polar faces to afford gaps, such as have just been alluded to, and secure maximum effectiveness of the magnetic break. The proportions shown in Fig. 3 are those which have been found to yield the best results. At substantially the same time that this double break occurs, roll 30 engages lever 40 and causes a quick separation of the breaker 38 and 39 and an opening of the primary circuit, which has theretofore been maintained closed for the purpose of holding the flux in the magnetic circuit. On the substantially simultaneous opening of both the magnetic and the primary circuits, a very rapid decrease of flux occurs and an E. M. F. is generated in the secondary, resulting in a spark at plug *f*. The flux change, utilized for the production of the spark, is that which occurs on the breaking rather than the making of the magnetic circuit and this is important because a more rapid and more effective change of flux occurs under the former condition than under the latter.

Having described the production of the spark, the next and a most important consideration is the building up of the flux in the magnetic circuit in readiness for the production of another spark. The lever 40 preferably has its tail piece 40′ so constructed that the breaker points 38 and 39 are held separated for a short interval. This interval is preferably such as to allow the rotor 15 to move from the position shown in Fig. 3 to that shown in Fig. 5. In Fig. 5, the breaker points have just closed and in Fig. 3 they have just opened. As will be evident from Fig. 5, this interval is long enough to allow a closing of the magnetic circuit by the rotor and, in consequence, a building up of a substantial amount of flux occurs under the most favorable condition of an open circuited primary winding. Such winding does not then oppose and restrain the building up of flux and I believe that the greater part of the flux is built up during the time while the breaker points are open. While full coverage of the polar faces 14 by the inductor is not obtained, there is enough to permit the action described and my experiments indicate that results are not materially improved by delaying the closing of the breaker points beyond the time indicated. This is probably due to the fact that the completion of the building up of flux can be accomplished against the restraining influence of the short circuited primary because of the time available by the long period in which the rotor holds the magnetic circuit closed. By keeping such circuit closed as long as possible, the flux built up, while the breaker points are open, is retained and time allowed for further building up of flux, if and when the same is necessary.

There are two positions of the rotor wherein the magnetic circuit is broken in part,—one when the leading notch 18 comes into registration with the lower polar-face 14 and the other when the trailing notch 18 is similarly positioned with respect to the upper polar face. There will undoubtedly be a loss in flux at each of these two positions but such losses are kept at a minimum because the primary circuit is then closed and tends to oppose change in flux. However, the much greater intervals, when the magnetc circuit is closed, permit rebuilding up of flux to an extent to adequately compensate for such losses. It is possible to arrange the magneto, as shown at M′ in Fig. 7, so that a single notch 18′ in a somewhat wider inductor 15′ will cause a double break in the magnetic circuit by coming under both cores 10′ at the same time. This arrangement avoids ensuing losses, such as above described. However, a different disposition of the magneto on the engine is required and one which would not in many cases, admit of the compact arrangement herein shown, where the magneto fits nicely into the space between the crankcase and the flywheel and does not project materially beyond the periphery of the latter. It will be understood that the unit M′ is like the unit M except that the breaker point mechanism would need to be mounted on one of the ends faces rather than on the side face, as heretofore described.

It will be understood that the feature relating to the centrifugal arrangement for cutting out the magneto to control engine speed may be used or not, as occasion requires, and this feature is not essential in so far as the real invention is concerned.

It has been stated that the part 19 of the rotor is most important. But for this part, it would not be feasible to close the magnetic circuit before the breaker points close and thus all of the flux would have to be built up against the restraining influence of a short circuited primary winding. That is one reason why one long notch, extending from the leading end of the leading notch to the trailing end of the other notch, would not be practical at all. The other, and a most important reason for the part 19 is that it adds to the length of the period during which the magnetic circuit is closed. The effort here is to do away with as little of the periphery of the inductor as is practical, and thereby secure as long a period as is practical for the closed condition of the magnetic circuit. The present arrangement affords time for the building up of flux against a short circuited primary winding and also holds the flux that has been built up. Although a great deal of flux is built up, while the breaker points are open, as was the case in the Clark patent above referred to, much better results are obtained here, which clearly indicates the value of keeping the magnetic circuit normally closed rather than open. Also the improved results are obtained with a simple form of breaker point mechanism without going to the special provisions of the Clark patent and the complications, which as a practical matter, often arise from the use of the device therein shown.

The magneto can be operated satisfactorily in other than the exact manner described and the described operation is to be taken as illustrative of what I now believe to be the best and preferred operation, rather than in any limiting sense. The magneto installation is not so critical or sensitive that extreme care and exactitude in the adjustments of the relative positions of the parts is necessary. For example, a spark will be produced if the breaker points open earlier and before the magnetic circuit has been completely broken. The building up of flux while the breaker points are open is most desirable, important, and preferred, but it is not necessarily essential in all cases and particularly in those cases where there is a long dwell period during which the magnetic circuit is closed. In

the latter case, there may be time enough for all the flux to build up against the restraining influence of the closed circuited primary winding. However, if the inductor should have additional notches to produce more sparks per revolution, then the feature of building up flux while the breaker points are open would probably be essential for successful results.

A most important feature of the invention is that both polar faces 14 lie on the same side of the crankshaft so that by one adjustment both such faces may be moved into closely adjacent relation with the inductor. A minimum clearance between the inductor and polar faces is essential for maximum efficiency and if the polar faces were diametrically opposite such small clearances as are here used would not be feasible because the crankshaft, in many cases, does not run true enough to permit. In applying the magneto to an engine, which has been in use for some time, the wear in the bearings might be enough to defeat the use of the rubbing clearance, herein desired, unless the polar faces were both located on the same side of the shaft. Also, of course, the cores would have to be independently adjustable, if located in diametrically opposed relation and this is seldom feasible.

As distinguished from the flywheel magnetos, now found in the market, the present magneto can be made up separately from the engine and requires no special design of engine parts. In fact, a standard type of magneto, already available and of proved efficiency, can be utilized with but little modification. This one compact unit may be furnished to the engine manufacturer, with a supporting bracket therefor and the inductor, and the magneto installation can be effected without requiring any special skill. The necessity of designing the magneto to suit the engine is eliminated and an equipment is provided which is applicable to most engines without substantial change therein. It follows that the magneto can be produced at much less cost. Also, it is to be noted that the magneto can be removed by removing the one screw 26 and the complete outfit, except for the inductor (which does not require servicing) is available and accessible for servicing. The flywheel *e* has a recess, indicated at *e'* in Fig. 1, which, when turned so as to be opposite the breaker-point mechanism permits passage of the latter when the magneto unit M is removed. Such unit, containing all parts on which service can ever be required, may be removed and shipped back to the factory for repairs and another unit put in place to allow continued operation. One does not have to dismantle any part of the engine to get at the magneto.

The invention is characterized over magnetos in which the magnets rotate, in that a less amount of material, handled in a less expensive way, is productive of better results. As to that type of magneto in which the inductor rotates and the magnets are stationary, this invention points out the particular elements and arrangement thereof, which yield commercially successful results and render this type suitable where heretofore it has been unsuitable.

The invention has been disclosed herein, in an embodiment at present preferred, for illustrative purposes, but the scope of the invention is defined by the appended claims rather than by the foregoing description.

What I claim is:

1. A magneto, comprising, a stationary unit having a source of magnetic flux, a pair of cores connected one to each polar extremity of said source, and primary and secondary windings on said cores; cooperating and relatively movable breaker points, a primary circuit including said primary winding and breaker points and arranged to be opened and closed by the separation or engagement of said points, a rotary inductor movable in close proximity to the polar faces of said cores to maintain a normally closed magnetic circuit and arranged periodically to break such circuit substantially simultaneously at both polar faces, both said polar faces being located on the same side of the axis of revolution of said inductor, and means for separating said breaker points at substantially the same time that the magnetic circuit is broken at both said polar faces.

2. A magneto, comprising, a stationary unit having a source of magnetic flux, a pair of cores connected one to each polar extremity of said source, and primary and secondary windings on said cores; cooperating and relatively movable breaker points, a primary circuit including said primary winding and breaker points and arranged to be opened and closed by the separation or engagement of said points, a rotary inductor movable in close proximity to the polar faces of said cores to maintain a normally closed magnetic circuit and arranged periodically to break such circuit substantially simultaneously at both polar faces, both said polar faces being located on the same side of the axis of revolution of said inductor, and means for separating said breaker points at substantially the same time that the magnetic circuit is broken at both said polar faces and for holding them open until the inductor again closes such circuit.

3. A magneto, comprising, a stationary unit having a source of magnetic flux, a pair of cores connected one to each polar extremity of said source, and primary and secondary windings on said cores; cooperating and relatively movable breaker points, a primary circuit including said primary winding and breaker points and arranged to be opened and

closed by the separation or engagement of said points, a rotary inductor movable in close proximity to the polar faces of said cores to maintain a normally closed magnetic circuit and arranged periodically to break such circuit substantially simultaneously at both polar faces, both said polar faces being located on the same side of the axis of revolution of said inductor, means for separating said breaker points at substantially the same time that the magnetic circuit is broken at both said polar faces, and means for moving said unit to simultaneously move both said polar faces toward and away from said inductor.

4. A magneto, comprising, a stationary unit having a source of magnetic flux, a pair of cores connected one to each polar extremity of said source, and primary and secondary windings on said cores; cooperating and relatively movable breaker points, a primary circuit including said primary winding and breaker points and arranged to be opened and closed by the separation or engagement of said points, a rotary inductor movable in close proximity to the polar faces of said cores to maintain a normally closed magnetic circuit and arranged periodically to break such circuit substantially simultaneously at both polar faces, both said polar faces being located on the same side of the axis of revolution of said inductor, means for separating said breaker points at substantially the same time that the magnetic circuit is broken at both said polar faces and for holding them open until the inductor again closes such circuit, and means for moving said unit to simultaneously move both said polar faces toward and away from said inductor.

5. A magneto, comprising, a rotary inductor, a stationary unit having a source of magnetic flux, a pair of cores connected one to each polar extremity of said source, and primary and secondary windings on said cores; said cores having polar faces with respect to which said inductor moves in close proximity to maintain a normally closed magnetic circuit and which are located both on the same side of the axis of revolution of said inductor, said inductor having a pair of non-magnetic portions spaced apart by an angle less than 180 degrees and so as to register substantially simultaneously one with each of said polar faces and create a double break in said circuit, a normally closed electrical circuit including said primary winding, and means for opening said electrical circuit substantially at the same time that said magnetic circuit is broken.

6. A magneto, comprising, a rotary inductor, a stationary unit having a source of magnetic flux, a pair of cores connected one to each polar extremity of said source, and primary and secondary windings on said cores; said cores having polar faces with respect to which said inductor moves in close proximity to maintain a normally closed magnetic circuit and which are located both on the same side of the axis of revolution of said inductor, said inductor having a pair of non-magnetic portions spaced apart by an angle less than 180 degrees and so as to register substantially simultaneously one with each of said polar faces and create a double break in said circuit, a normally closed electrical circuit including said primary winding, and means for opening said electrical circuit substantially at the same time that said magnetic circuit is broken and holding it open until the inductor moves far enough to again close the magnetic circuit.

7. A magneto, comprising, a rotary inductor; a stationary unit having a source of magnetic flux, a pair of cores connected one to each polar extremity of said source, and primary and secondary windings on said cores; said cores having polar faces with respect to which said inductor moves in close proximity to maintain a normally closed magnetic circuit and which are located both on the same side of the axis of revolution of said inductor, said inductor having a pair of non-magnetic portions spaced apart by an angle less than 180 degrees and so as to register substantially simultaneously one with each of said polar faces and create a double break in said circuit, a normally closed electrical circuit including said primary winding, means for opening said electrical circuit substantially at the same time that said magnetic circuit is broken, and means for adjusting said unit to simultaneously move both said polar faces toward or away from said inductor.

8. A magneto, comprising, a rotary inductor; a stationary unit having a source of magnetic flux, a pair of cores connected one to each polar extremity of said source, and primary and secondary windings on said cores; said cores having polar faces with respect to which said inductor moves in close proximity to maintain a normally closed magnetic circuit and which are located both on the same side of the axis of revolution of said inductor, said inductor having a pair of non-magnetic portions spaced apart by an angle less than 180 degrees and so as to register substanially simultaneously one with each of said polar faces and create a double break in said circuit, a normally closed electrical circuit including said primary winding, means for opening said electrical circuit substantially at the same time that said magnetic circuit is broken and holding it open until the inductor moves far enough to again close the magnetic circuit, and means for adjusting said unit to simultaneously move both said polar faces toward or away from said inductor.

9. A magneto, comprising, a rotary inductor; a stationary unit having a source of

magnetic flux, a pair of cores connected one to each polar extremity of said source, and primary and secondary windings on said cores; said cores having polar faces with respect to which the periphery of said inductor moves in close proximity to maintain a normally closed magnetic circuit, and which are located both on the same side of the axis of revolution of said inductor, said inductor having a pair of non-magnetic portions in its periphery spaced apart by an angle less than 180 degrees and so as to register substantially simultaneously one with each of said polar faces and create a double break in said circuit, a normally closed electrical circuit including said primary winding, and means for opening said electrical circuit substantially at the same time that said magnetic circuit is broken.

10. A magneto, comprising, a rotary inductor; a stationary unit having a source of magnetic flux, a pair of cores connected one to each polar extremity of said source, and primary and secondary windings on said cores; said cores having polar faces with respect to which the periphery of said inductor moves in close proximity to maintain a normally closed magnetic circuit and which are located both on the same side of the axis of revolution of said inductor, said inductor having a pair of non-magnetic portions in its periphery spaced apart by an angle less than 180 degrees and so as to register substantially simultaneously one with each of said polar faces and create a double break in said circuit, a normally closed electrical circuit including said primary winding, and means for opening said electrical circuit substantially at the same time that said magnetic circuit is broken and holding it open until the inductor moves far enough to again close the magnetic circuit.

11. A magneto, comprising, a rotary inductor; a stationary unit having a source of magnetic flux, a pair of cores connected one to each polar extremity of said source, and primary and secondary windings on said cores; said cores having polar faces with respect to which the periphery of said inductor moves in close proximity to maintain a normally closed magnetic circuit and which are located both on the same side of the axis of revolution of said inductor, said inductor having a pair of non-magnetic portions in its periphery spaced apart by an angle less than 180 degrees and so as to register substantially simultaneously one with each of said polar faces and create a double break in said circuit, a normally closed electrical circuit including said primary winding, means for opening said electrical circuit substantially at the same time that said magnetic circuit is broken and holding it open until the inductor moves far enough to again close the magnetic circuit, and means for bodily moving said unit to simultaneously move both said polar faces toward or away from the periphery of said inductor.

12. A magneto, comprising, a rotary inductor consisting of a cylindrical body having in its periphery two notches which extend parallel with the axis of the body from one end face to the other and which are spaced apart by an angle less than 180 degrees; a stationary unit comprising a straight bar permanent magnet, cores extending one from each polar extremity of said magnet toward and terminating in closely adjacent relation to the periphery of said inductor and so spaced that when one of said notches registers with one of said cores the other registers with the other core, and primary and secondary windings on both said cores; a normally closed electrical circuit including said primary winding, and means for opening said circuit substantially at the same time that both said notches register with both said cores.

13. A magneto, comprising, a rotary inductor consisting of a cylindrical body having in its periphery two notches which extend parallel with the axis of the body from one end face to the other and which are spaced apart by an angle less than 180 degrees; a stationary unit comprising a straight bar permanent magnet, cores extending one from each polar extremity of said magnet toward and terminating in closely adjacent relation to the periphery of said inductor and so spaced that when one of said notches registers with one of said cores the other registers with the other core, and primary and secondary windings on both said cores; a normally closed electrical circuit including said primary winding, and means for opening said circuit substantially at the same time that both said notches register with both said cores and for holding it open until both cores are in part covered by peripheral portions of said inductor.

14. A magneto, comprising, a rotary inductor consisting of a cylindrical body having in its periphery two notches which extend parallel with the axis of the body from one end face to the other and which are spaced apart by an angle less than 180 degrees; a stationary unit comprising a straight bar permanent magnet, cores extending one from each polar extremity of said magnet toward and terminating in closely adjacent relation to the periphery of said inductor and so spaced that when one of said notches registers with one of said cores the other registers with the other core, and primary and secondary windings on both said cores; a normally closed electrical circuit including said primary winding, means for opening said circuit substantially at the same time that both said notches register with both said cores and for holding it open until both cores are in

part covered by peripheral portions of said inductor, and means for moving said unit in a radial direction with respect to said inductor to carry said cores toward or away from the periphery thereof.

In testimony whereof I have affixed my signature.

IRA E. HENDRICKSON.

Feb. 10, 1931. F. J. HARDMAN 1,792,089

IGNITION DEVICE

Filed June 27, 1929

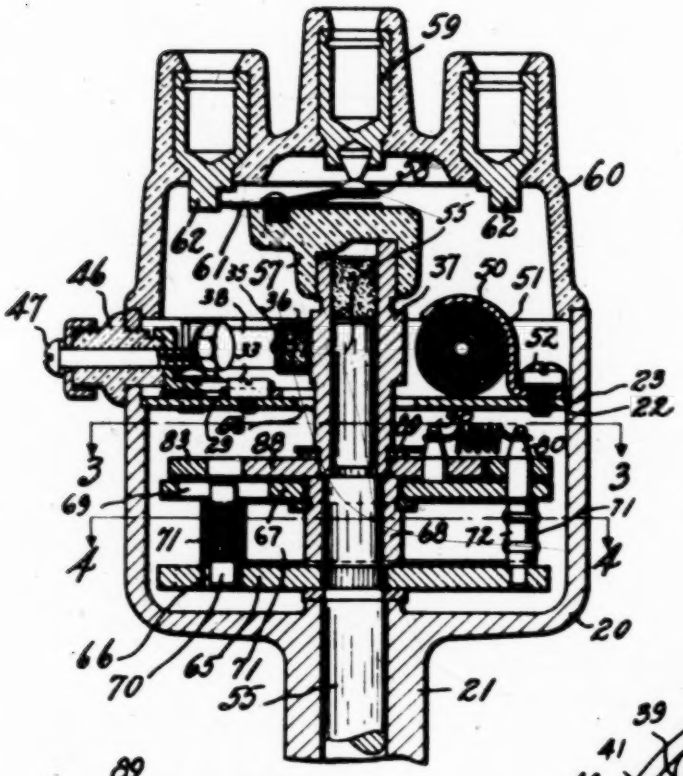

Fig. 1

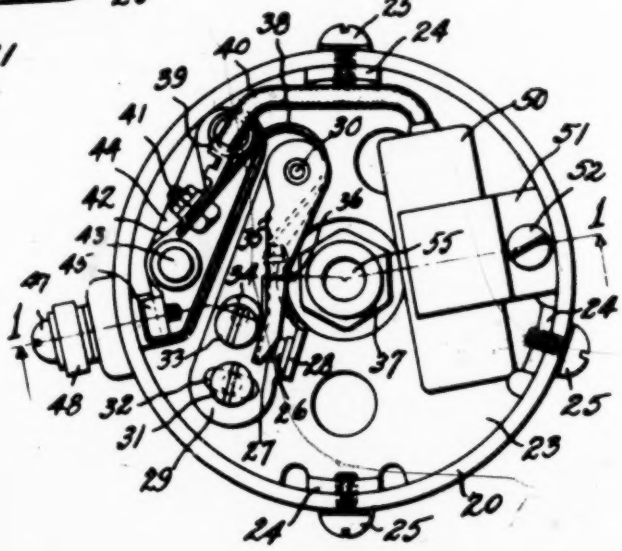

Fig. 2

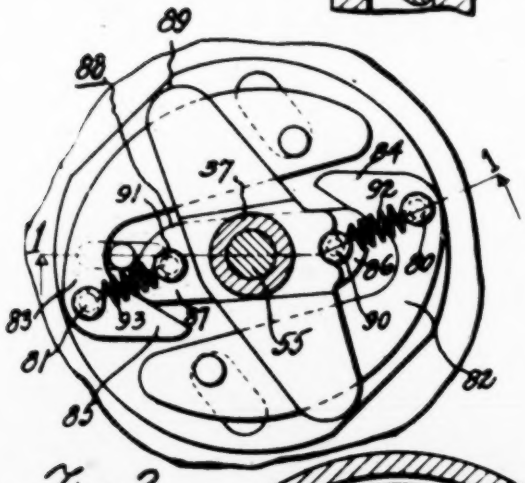

Fig. 3

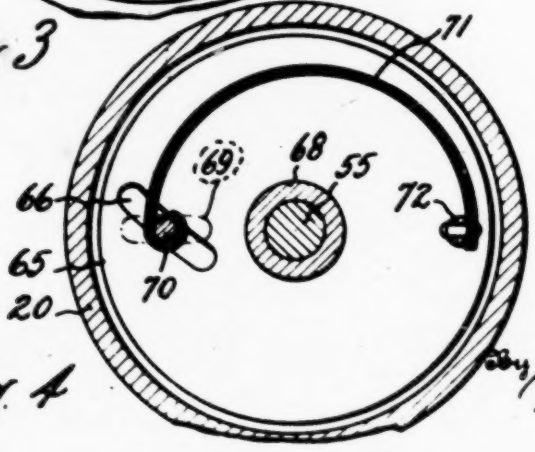

Fig. 4

Inventor

Frederick J. Hardman

by Spencer Hardman & Fehr

his Attorneys

Patented Feb. 10, 1931

1,792,089

UNITED STATES PATENT OFFICE

FREDERICK J. HARDMAN, OF DAYTON, OHIO, ASSIGNOR TO DELCO-REMY CORPORATION, OF ANDERSON, INDIANA, A CORPORATION OF DELAWARE

IGNITION DEVICE

Application filed June 27, 1929. Serial No. 374,171.

This invention relates to improvements in ignition devices for internal combustion engines.

It is among the objects of the present invention to provide an ignition device adapted automatically to vary the time of sparking impulses for the engine in accordance with variations in temperature conditions, or in accordance with both variations in engine speed and temperature conditions.

Further objects and advantages of the present invention will be apparent from the following description, reference being had to the accompanying drawings wherein a preferred embodiment of one form of the present invention is clearly shown.

In the drawings:

Fig. 1 is a vertical sectional view taken through the center of the ignition device, and on lines 1—1 of Figs. 2 and 3, certain parts being shown in elevation for the sake of clearness.

Fig. 2 is a plan view of the ignition device with the distributor head removed.

Fig. 3 is a sectional view taken along the line 3—3 of Fig. 1.

Fig. 4 is a sectional view taken along the line 4—4 of Fig. 1.

Referring to the drawings, the ignition device is shown comprising a cup-shaped housing 20 having a cylindrical boss 21 extending therefrom by which the ignition device may be supported upon the engine, not shown. Within the housing 20 there is provided an annular shoulder 22 upon which is supported a plate 23, said plate having a plurality of upturned ears 24 provided with screw-threaded openings for receiving the screws 25 which extend through the annular wall of the housing 20, enter the screw-threaded openings in the ears 24 of plate 23 and securely attach said plate 23 within the housing 20. The plate 23 supports the circuit interrupting mechanism of the ignition device, said circuit interrupting mechanism comprising a stationary contact 26 and a movable contact 27. The stationary contact 26 is carried by an up-turned ear 28 provided by the bracket 29 which is pivotally secured to a pin 30 supported by the plate 23. The bracket is adjustable for purposes to be described, a screw 31 extending through an elongated slot 32 in the bracket, screw-threadedly engaging the plate 23 so as to clamp the bracket 29 upon said plate. The elongated slot 32 has its longer sides substantially coaxial of the pivot pin 30 whereby the bracket may be swung about said pivot pin for adjustment purposes when the screw 31 is loosed.

In order to obtain delicate adjustments of the bracket 29, a member 33 is provided, having a stud portion rotatably attached to the plate 23 and a head portion eccentric to the stud portion, said head portion fitting into an elongated slot 34 in the bracket, the longer sides of said slot 34 being substantially radial of the pivot pin 30. From this it may be seen that the bracket 29, when screw 31 is loosed, may be adjusted about the pivot pin 30 by the rotation of the eccentric head of member 33.

The movable contact 27 is carried by the contact arm or lever 35 which is pivotally supported by the pin 30 and insulated therefrom in any suitable manner, the contact 27 being supported at the outer end of said lever. Intermediate the contact 27 and the pivot pin 30, lever 35 has a rubbing block 36 which is adapted to be engaged by the cam 37 so as to move the lever 35 to disengage the contact 27 from the stationary contact 26. A rivet which holds the rubbing block 36 to the arm 35 also anchors one end of the spring conductor 38 to said arm 35, the other end of said spring conductor being secured with clip 39 of the lead 40 to an angular ear 41 provided on the terminal plate 42. Terminal plate 42 is secured to plate 23 by rivets 43, said plate, however, being insulated from the plate 23 by the insulating plate 44. An upright angular ear 45 provided on the terminal plate 42 engages the insulator 46 which extends through an opening in the annular wall of the housing 20 and supports the connecting screw 47 to the outer end of which the terminal clip 48 is attached. The lead 40 connects one foil of the condenser 50 with the movable contact 27, the other foil of said condenser being grounded to the plate 23 by

the bracket 51 which is secured to the plate 23 by screws 52, said bracket being thus electrically connected with the stationary contact 26.

The drive shaft of the ignition device is rotatably supported in the cylindrical boss 21, said drive shaft being designated by the numeral 55. The drive shaft extends through a central opening 56 in the plate 23, the cam 37 being rotatably mounted upon the portion of the drive shaft which extends through said opening. The upper end of the cam 37 supports the rotor 57 which has a spring conductor 58 electrically engaging the central high tension terminal 59 of the distributor head 60, another terminal plate 61 supported by the rotor 57 being adapted to be moved into juxtaposition of the various terminal posts 62, supported by the distributor head 60 by the rotation of the rotor 57. Terminal posts 62 are adapted to be connected to the various cylinders of the internal combustion engine with which the present device is to be used. The distributor head rests upon the upper edge of the housing 20 and is secured to said housing in any suitable manner.

Within the housing 20 a plate or disc 65 is secured to the drive shaft 55 so that it will be rotated therewith. An elongated slot 66 is provided in the disc 65 adjacent the outer peripheral edge thereof, said slot being angularly arranged relative to a plane radial of the drive shaft. This angular slot 66 is clearly illustrated in the Fig. 4. An intermediate member, designated by the numeral 67, in the form of a disc similar to the disc 65, is secured to a sleeve 68 which forms a bearing by which the intermediate member 67 is rotatably supported by the drive shaft 55. This sleeve 68 rests upon the disc 65 whereby the intermediate member 67 is held in proper spaced relation relative to said disc 65. The intermediate member 67 has an elongated slot 69 arranged substantially radially of the bearing sleeve 68, the length of this slot 69 being substantially equal to the length of the angular slot 66. A pin 70 has one end extending into the angular slot 66 of the plate 65, the other end of said pin extends into the radial slot 69 of the intermediate member 67. One end of a temperature responsive element or thermostatic, bimetallic strip 71, is securely anchored to the pin 70, the other end of said thermostat 71 being secured to a post 72 which is carried by the disc 65. The thermostat 71 is so constructed that, at decreasing temperatures it will expand to move the pin 70 outwardly away from the axis of the drive shaft 55 whereby the pin will follow the angular slot 66, said movement of the pin causing the intermediate member 67 to be rotated clockwise relative to the disc 65 as regards the Figs. 2 and 4, which rotation of the intermediate member 67 is in the direction of rotation of cam 37. Thus, at decreasing temperatures the thermostat 71 will expand and clockwise vary the angular relation between the intermediate element 67 and the disc 65. At increasing temperatures the element 71 will contract, follow the path of the angular slot 66 of disc 65 toward the axis of the shaft 55 whereby a counter-clockwise rotative motion is transmitted to the intermediate member 67 or more specifically a rotative motion in a direction opposite to the rotation of cam 37.

The intermediate member 67 has two posts 80 and 81 supported thereon which pivotally support centrifugal weight members 82 and 83 respectively. These weight members each have camming arms 84 and 85 respectively, which are adapted to engage the ends 86 and 87 respectively, of the plate 88 which is secured to the lower end of the cam 37 so as to be rotatable therewith. A retainer plate 89 maintains the centrifugal weight members 82 and 83 in proper position, said retainer plate being carried on the lower end of the cam 37. The arms 86 and 87 of plate 88 are provided with studs 90 and 91 respectively. Between the post 80 and stud 90 a spring 92 is anchored and between the post 81 and stud 91 a spring 93 is supported both springs 92 and 93 yieldably urging the plate 87 so that it will exert pressure upon the respective camming arms 84 and 85 of the centrifugal members 82 and 83 respectively, whereby said members or weights are yieldably urged toward the normal position, or more specifically toward the axis of the drive shaft 55. From this it may be seen that the intermediate member 67 is connected with the cam 37 through the posts 80 and 81, centrifugal weight members 82 and 83 and plate 88, said plate having arms 86 and 87 engaged by the centrifugal weight members 82 and 83 respectively. The plate 88, as has been mentioned, is attached to the cam 37. Thus, the cam 37 will be rotated with the intermediate member 67.

A proper increase in speed will cause the weights 82 and 83 to fly outwardly, exerting pressure upon the arms 86 and 87 of the plate 88 to rotate said plate clockwise as regards Fig. 3, thus causing the plate 88 to rotate the cam 37 clockwise in addition to the clockwise rotation of the cam by the engine. Thus, at increasing speeds, by the added clockwise rotation of the cam, the time of sparking impulses is automatically advanced in accordance with increases in engine speed and inversely as the weights are drawn inwardly by springs 92 and 93 at reduced engine speeds the time of sparking impulse will be retarded due to the counter-clockwise movement of the cam by the plate 88.

The movement of the thermostatic member 71 outwardly, at lowering temperatures,

and inwardly at rising temperatures, will move the intermediate member 67 clockwise and counter-clockwise respectively, said rotation being transmitted through the speed responsive means to the cam 37 and thus the cam will be rotated clockwise or counter-clockwise respectively, to advance or retard the spark in accordance with such respective decreases or increases in temperature conditions.

It has been found by experience that at comparatively low temperatures an internal combustion engine is more easily started if the time of sparking impulses is set substantially in advance to the setting for normal temperatures so that the thermostatic element in this instance will operate at lowering temperatures to advance the spark and thus facilitate starting of the engine. At normal temperatures the thermostat will maintain pin 70 substantially midway between the ends of slots 66 and 69 so that at lowering temperatures the pin may move toward the clockwise rotation ends of said slots, while at increasing temperatures where a more retarded spark will more efficiently fire the engine, the pin 70 will approach the counterclockwise rotation end of said slots.

While the form of embodiment of the present invention as herein disclosed, constitutes a preferred form it is to be understood that other forms might be adopted, all coming within the scope of the claims which follow.

What is claimed is as follows:

1. An ignition device for an internal combustion engine comprising in combination; a circuit interrrupter; a shaft adapted to be driven by the engine; a cam for operating said circuit interrupter, rotatably supported upon the said shaft; a speed responsive device rotatably supported by said shaft and connected to the cam; a member attached to the shaft; means connected between the speed responsive device and said member for connecting said device to the shaft, said means being movable to adjust the angular relation between said device and member; and a thermostat directly connected with said aforementioned means for operating it to obtain said angular adjustment in accordance with temperature changes.

2. An ignition device for an internal combustion engine comprising in combination, a circuit interrupter; a cam member for operating said interrupter; a shaft member; plates carried by the shaft in superposed relation, one being rotatable relative to said shaft; a speed responsive device carried by the plate rotatable relative to said shaft, said speed responsive means being connected with the cam to adjust the cam in accordance with the speed of the plate supporting said device; a member connecting the plates whereby the plate carrying the speed responsive device is connected with the shaft, said member being movable relative to said plates to adjust the one relative to the other angularly; and a temperature responsive device attached to the plate secured to the shaft and to the said member for moving said member to secure adjustments of the plates in response to temperature changes and independently of ignition device operation.

3. An ignition device for an internal combustion engine comprising in combination, a circuit interrupter; a drive shaft adapted to be driven by the engine; a cam for operating said circuit interrupter, said cam being rotatably supported upon the shaft; an intermediate member rotatably supported by the shaft; speed responsive means carried by the intermediate member and connected with the cam; a supporting element carried by and secured to the shaft; and temperature responsive means for connecting the intermediate member and the supporting element and for varying the angular relation between them in accordance with temperature changes.

4. An ignition device for an internal combustion engine comprising in combination, a circuit interrupter; a drive shaft adapted to be driven by the engine; a cam for operating said circuit interrupter, said cam being rotatably supported upon the shaft; a mounting plate carried by and secured to the shaft; an intermediate member rotatably supported by the shaft; temperature responsive means mounted on the mounting plate and connecting the said mounting plate and the intermediate member, said means being adapted to vary the angular relation between them in accordance with temperature changes; a speed responsive means carried by the intermediate member for connecting said member with the cam and for varying the angular relation between the shaft and cam in accordance with variations in the speed of the shaft.

5. An ignition device for an internal combustion engine comprising in combination, a circuit interrupter; a cam for operating said interrupter; a drive shaft; a plate drivingly connected with the cam; said plate having an elongated slot; a disc secured to the drive shaft, and having an elongated slot arranged angularly to the slot in the plate; a pin extending into both slots; and a temperature responsive element anchored at one end to the disc and at the other end to said pin for moving the pin to rotate the plate relative to the disc in response to temperature variations.

6. An ignition device for an internal combustion engine comprising in combination, a circuit interrupter; a drive shaft; a cam for operating said interrupter, rotatably carried by the drive shaft; a plate rotatably supported by the drive shaft and operatively connected with the cam; said plate having an elongated slot; a disc secured to the drive

shaft, having an elongated slot arranged angularly relative to the slot in the plate; a pin extending into both slots; and a bimetallic strip, anchored at one end to the disc and at the other end to the pin for operating said pin to rotate the plate relative to the disc.

7. An ignition device for an internal combustion engine comprising in combination, a circuit interrupter; a drive shaft; a cam for operating said circuit interrupter, rotatably supported by the shaft; a plate rotatably carried by the shaft and having an elongated slot; speed responsive means carried by the plate and operatively engaging the cam for varying the angular relation between the cam and shaft in response to variations in the speed of the shaft; a disc secured to the shaft, having an elongated slot angularly arranged relative to the slot in the plate; a pin extending into both slots; and a bimetallic element anchored at one end to the disc and at the other end to the pin and adapted to operate the pin for rotating the plate relative to the disc whereby the angular relation between the cam and shaft is varied in accordance with temperature variations.

In testimony whereof I hereto affix my signature.

FREDERICK J. HARDMAN.

April 18, 1933. K. A. HARMON 1,904,308

MAGNETO

Original Filed Oct. 6, 1931 4 Sheets-Sheet 1

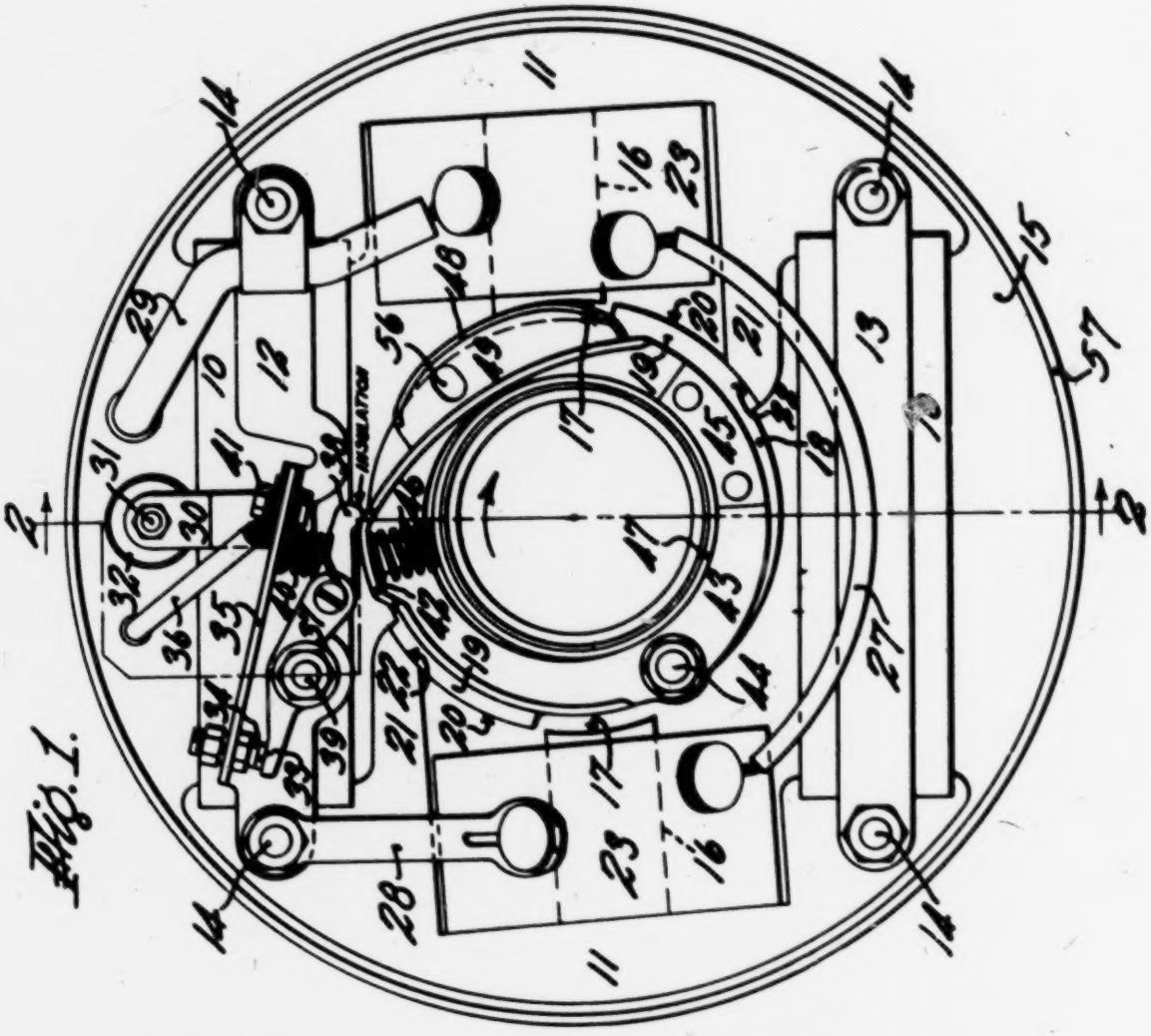

Fig. 1.

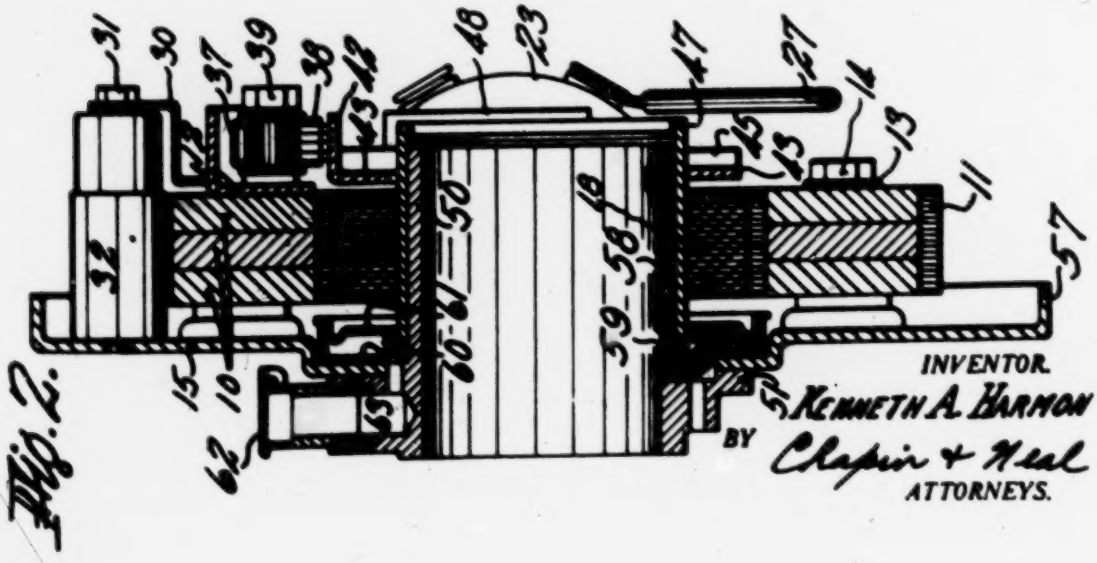

Fig. 2.

INVENTOR.
KENNETH A. HARMON
BY Clapp & Neal
ATTORNEYS.

April 18, 1933. K. A. HARMON 1,904,308

MAGNETO

Original Filed Oct. 6, 1931 4 Sheets-Sheet 2

Fig. 3.

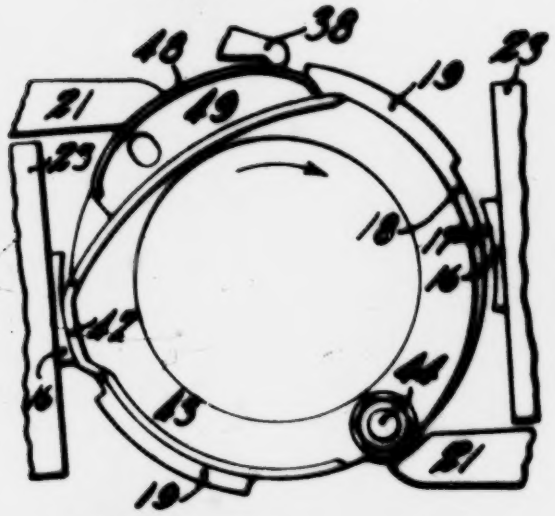

Fig. 4.

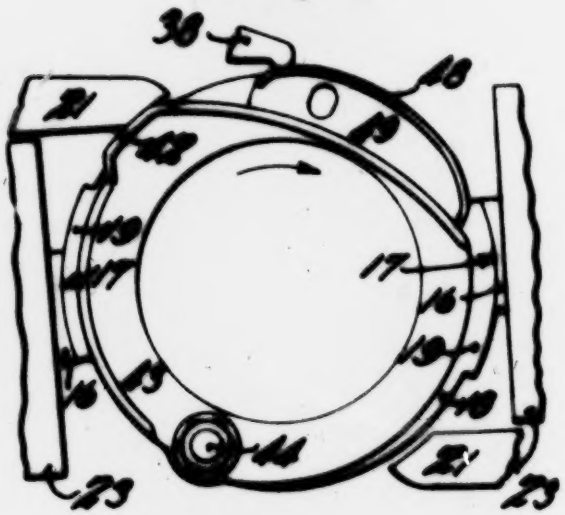

Fig. 5.

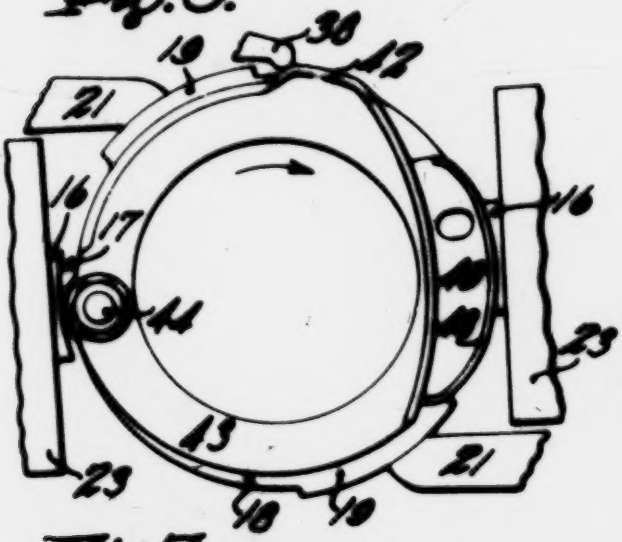

Fig. 6.

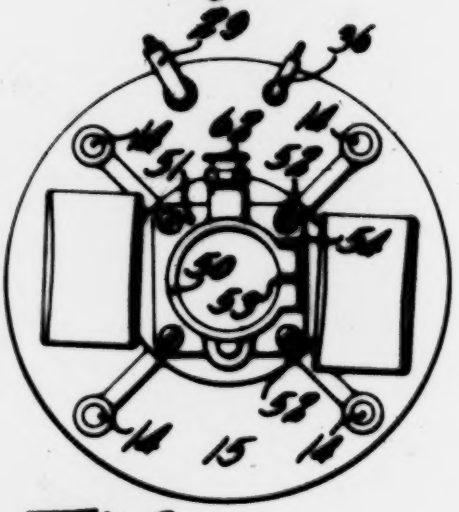

Fig. 7.

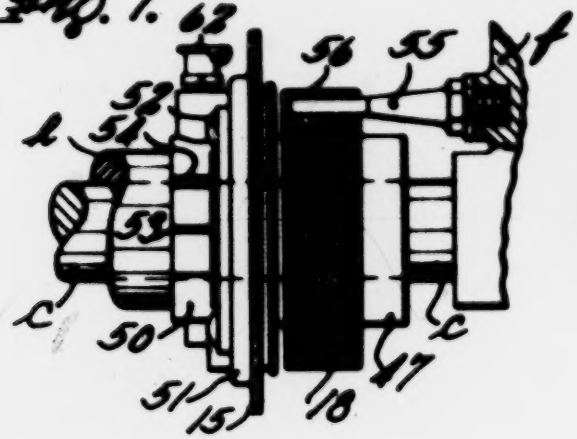

Fig. 8.

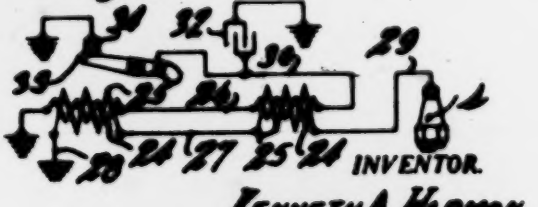

INVENTOR.
KENNETH A. HARMON
BY Clapp & Neal
ATTORNEYS.

April 18, 1933. K. A. HARMON 1,904,308

MAGNETO

Original Filed Oct. 6, 1931 4 Sheets-Sheet 3

Fig. 9.

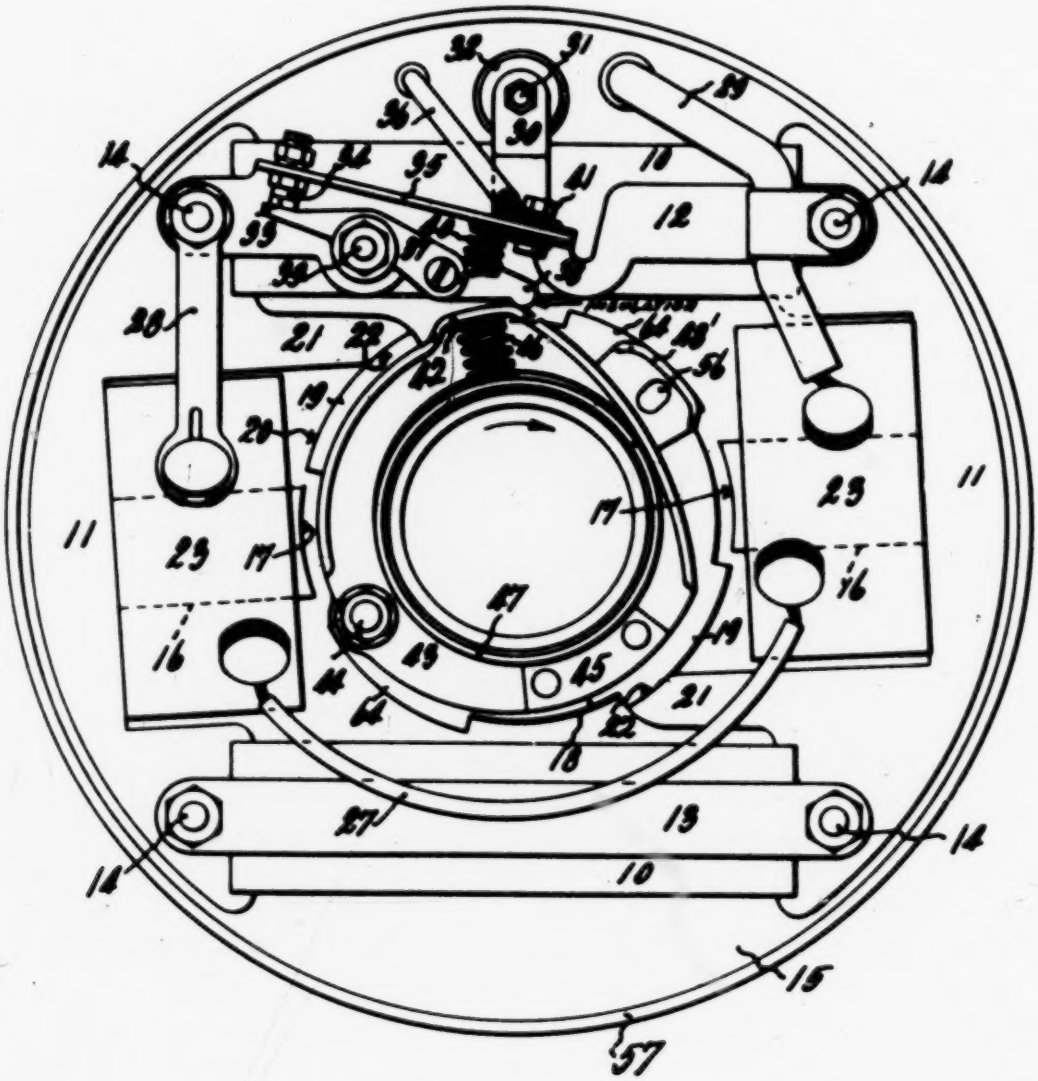

INVENTOR.
KENNETH A. HARMON
BY Chapin & Neal
ATTORNEYS.

April 18, 1933. K. A. HARMON 1,904,308

MAGNETO

Original Filed Oct. 6, 1931 4 Sheets-Sheet 4

Fig. 10.

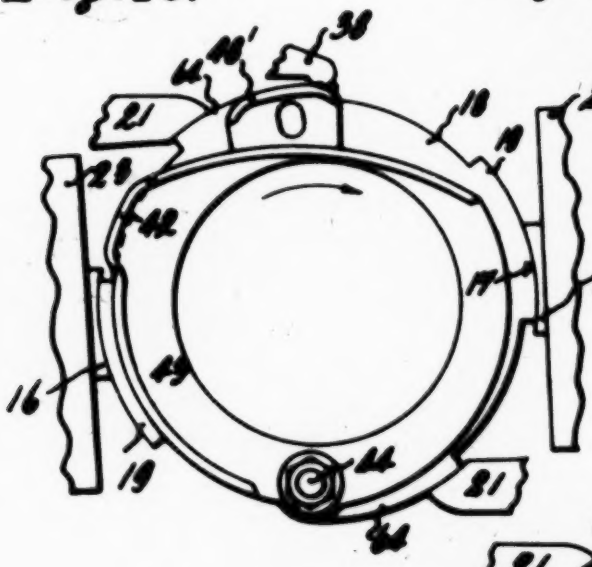

Fig. 13.

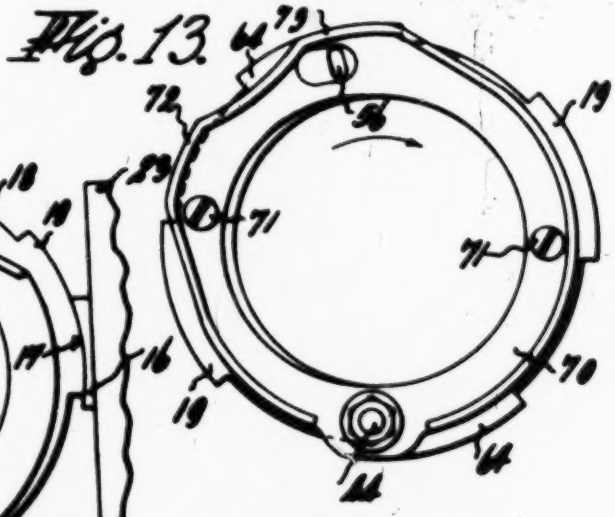

Fig. 11.

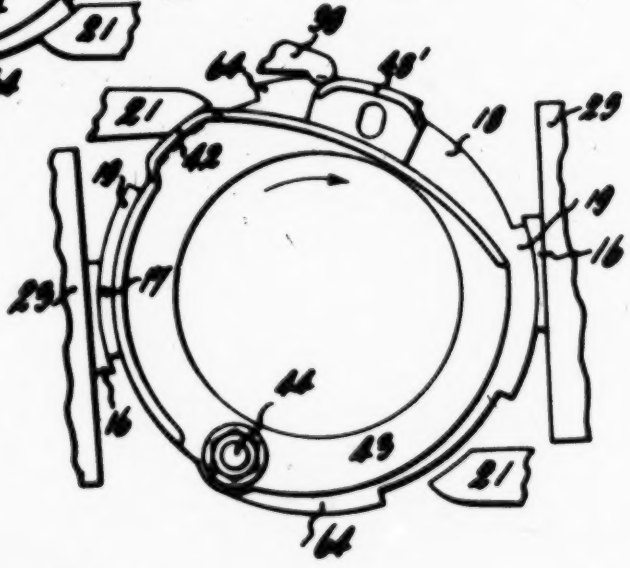

Fig. 12.

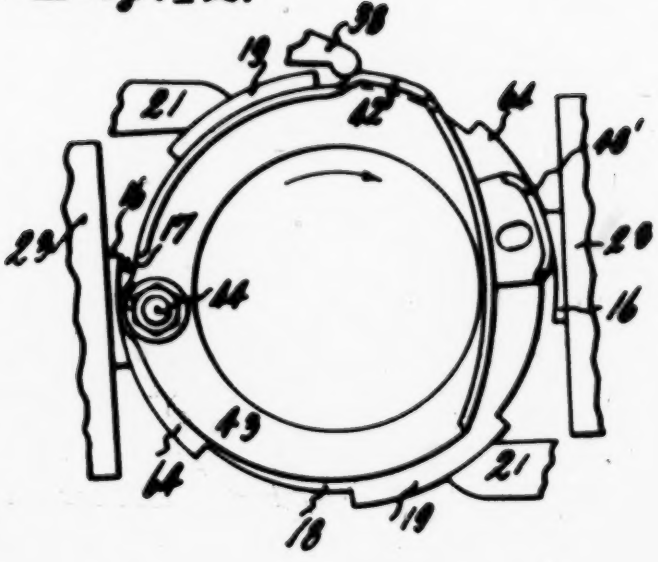

INVENTOR.
KENNETH A. HARMON
BY Clapin & Neal
ATTORNEYS.

Patented Apr. 18, 1933 1,904,308

UNITED STATES PATENT OFFICE

KENNETH A. HARMON, OF SPRINGFIELD, MASSACHUSETTS, ASSIGNOR TO WICO ELECTRIC COMPANY, OF WEST SPRINGFIELD, MASSACHUSETTS, A CORPORATION OF MASSACHUSETTS

MAGNETO

Application filed October 6, 1931, Serial No. 567,171. Renewed May 27, 1932.

This invention relates to improvements in magnetos of the rotary inductor type.

The inductor, of magnetic material and usually of the unwound type, is notched or has non-magnetic portions in its periphery and the remaining unnotched portions form magnetic projections which cooperate with two pole pieces, connected one to each polar extremity of a suitable magnetic source, such as a permanent magnet, for example. These projections are adapted during part of each revolution of the inductor to interconnect the two pole pieces and establish a magnetic circuit from said source through the pole pieces and inductor. When the notched portions of the inductor lie adjacent the pole pieces, this magnetic circuit is broken. Primary and secondary windings are applied to some part of such circuit, usually to at least one and preferably both of the pole pieces. The primary circuit, in accordance with usual practice, is in a normally closed electrical circuit, the opening and closing of which is controlled by a pair of relatively movable breaker points, the operation of which is controlled by suitable means, such as a cam, usually carried by or at least movable with the inductor.

The problem of this invention is to improve the efficiency of such a magneto. This has been effected primarily by the provision of an additional means, preferably independent of the usual means, for operating the breaker points. An additional opening and closing of the primary circuit is effected with the advantages set forth below.

If the magneto is operated with a normally closed primary circuit, flux builds up relatively slowly in the magnetic circuit. Considerable time is required for the purpose. The magnetic projections have to be relatively long in peripheral extent in order to maintain the pole pieces interconnected for a sufficient length of time to build up the necessary amount of flux against the restraining influence of a short circuit primary winding. By my invention, a magneto operating according to such plan, is improved by the extra opening and closing of the breaker points. They are made to open as the inductor moves into position to "make" the magnetic circuit and are held open for a substantial interval to allow flux to build up as rapidly and completely as possible in the magnetic circuit. They are closed before the inductor breaks this circuit in order to hold the flux against substantial diminution until the inductor has moved into an "optimum" position for the break, i. e., one in which a substantial double air gap exists between the magnetic projections and the pole pieces. Then the breaker points are again opened by the usual mechanism to release the flux and cause a sudden change in the magnetic circuit through the windings.

The action may be, and preferably is, aided and improved by the provision of extensions, one from each pole piece, with which the rotor projections cooperate to make a shunt circuit from the magnetic source in a low reluctance path lying wholly outside the windings. Thus shunt circuit is made just prior to the break of the magnetic circuit and to the spark-producing opening of the breaker points. Accordingly, the decrease in flux in the main magnetic circuit through the windings is accelerated by the provision of the shunt circuit, which affords a better path for the flux and thereby diverts it from the main circuit.

In the magneto above described, there are at least two positions of the inductor during each revolution thereof in which the magnetic circuit is made and broken. There may to advantage be more than two such positions, as will later appear. In many cases, only one of these positions is utilized for the production of a spark. The other position or positions, however, has or have spark producing possibilities, and if the breaker points are open while the inductor moves into and through any other position, a spark may be produced which is bothersome because it occurs at an undesired time. This extra spark is not so effective but it is often substantial enough to cause trouble. My invention enables the suppression of this undesired spark. It enables the primary circuit to be maintained closed, while the inductor travels

through all but a selected one of its two or more ranges, in which the magnetic circuit is made and subsequently broken, and thus the closed circuited primary winding is effective to restrain a substantial flux change in the circuit. Yet, when the inductor enters the selected one of its ranges, the restraining influence is removed by the additional opening of the breaker points, enabling flux to build up rapidly and effectively.

Other objects and advantages will appear as the detailed description proceeds and will be pointed out in the appended claims.

The invention will be disclosed for illustrative purposes with reference to the accompanying drawings, in which:

Fig. 1 is a front elevational view of a magneto embodying my invention;

Fig. 2 is a sectional view thereof taken on the line 2—2 of Fig. 1;

Figs. 3, 4 and 5 are diagrammatical views, illustrative of the operation of the magneto and particularly of the times of opening and closing of the breaker points with relation to the position of the rotor;

Fig. 6 is a small-scale rear elevational view of the magneto;

Fig. 7 is a fragmentary side elevational view showing the manner of mounting the magneto on and driving it from an engine;

Fig. 8 is a diagrammatical view illustrative of the electrical connections of the magneto;

Fig. 9 is a view taken similarly to Fig. 1 but showing a modification of the invention,—a rotor with four projections;

Figs. 10, 11 and 12 are views showing the rotor of Fig. 9 in three different positions which correspond to the positions shown in Figs. 3, 4 and 5 in connection with the rotor of Fig. 1; and

Fig. 13 is an elevational view of the rotor equipped with a modified form of cam for operating the breaker points.

Referring to these drawings; the magneto includes a source of magnetic flux,—such as the permanent magnets 10,—and, as illustrated, the magnets of the source are arranged in two spaced parallel groups. Like ends of the magnets in these two groups are interconnected by members 11 (Fig. 1) made up of soft iron laminations. The ends of the magnets tightly fit in recesses in the members 11. These members are tied together by bars 12 and 13 of non-magnetic material and the assembly is secured by cap screws 14 to a circular supporting plate 15 of non-magnetic material. The cap screws 14, which pass through the laminated members 11, serve to bind the cross bars to the members 11 and the latter to plate 15 (Fig. 2). The laminated members 11 have extensions 16 (Fig. 1), forming cores which project from their respective members toward one another and terminate with curved polar faces 17. An unwound inductor 18, made up of soft iron laminations, rotates between these faces and has two substantially diametrically opposed projections 19, having faces 20 curved concentrically with the faces 17 and of a diameter only slightly less than the distance between the faces 17. Intermediate these projections, the periphery of the rotor is of less diameter to create, when positioned as shown, a double break in the magnetic circuit from said source through the cores 16. When the rotor moves into such position that the projections 19 interconnect the cores as shown in Fig. 4, the aforesaid magnetic circuit is established.

In addition to providing for the aforesaid break in the magnetic circuit to periodically cause decrease in flux through said cores, means are provided for shunting the magnets to cause a more rapid and more effectual decrease in flux through the cores by diverting it through a path of low reluctance. For this purpose, each member 11 has an extension 21 to cooperate with the projections 19 of the rotor. One of these extensions lies above one core 16 and the other below the other core 16 and the two have polar faces 22, which are arranged substantially in diametrically opposed relation and are curved concentrically with the faces 17 and 20. When the rotor is positioned as in Fig. 1, the two extensions 21 are interconnected by the rotor 18 and these elements afford a low reluctance shunting path for the flux from the magnets. Flow of flux through cores 11 is effectually diverted.

The magneto also includes primary and secondary windings on the cores 16. On each is a coil case 23, which contains a primary coil 24 and a secondary coil 25. These coils are shown diagrammatically in Fig. 8. As shown for illustrative purposes, the two primary coils and the two secondary coils are connected in series, as by wires 26 and 27, respectively. One terminal of the primary winding and one terminal of the secondary winding is grounded, as indicated. The secondary ground wire is shown at 28 in Fig. 1 as being connected to the cross bar 12 and clamped thereto by cap screw 14. The other terminal of the secondary winding is adapted to be connected by a wire 29 to the ignition system and directly or indirectly to a spark plug *s*. The other terminal of the primary winding is connected by a wire 30 to one terminal 31 of a condenser 32 and to an insulated and movable breaker point 33. The cooperating and fixed breaker point 34 is grounded by being connected directly to a flange 35 on cross bar 12 (Fig. 1). The other terminal of condenser 32 is also grounded, being connected as shown in Fig. 2 to plate 15. The wire 36, in Figs. 1 and 6, is adapted for connection, if desired, to a ground switch (not shown) by which the normally insulated terminal of the primary winding may be grounded.

The breaker point mechanism includes a lever, comprising a metallic portion 37 (Figs. 1 and 2), of inverted U-shape section, and a portion 38 of insulating material. This lever is pivotally mounted on and insulated from a stud 39, carried by cross bar 12. Breaker point 33 is fixed to the metallic portion 37 of this lever and such portion is electrically connected by means of a spring 40 and bolt 41 to the conductor 30,—the bolt passing through flange 35 but being insulated therefrom as are also the spring 40 and conductor 30. The spring 40 also serves to hold the breaker points in engagement. For the purpose of separating the breaker points, a cam 42 carried by the rotor is employed. As shown, this cam is a flange-like extension of a ring 43, which is pivotally connected to the rotor by a stud 44 and carries a weight 45. A spring 46 acts between a sleeve 47 (to which the rotor is fixed) and cam 42 tending to force it radially outward and swing ring 43 on its pivot 44. Such motion is limited by the engagement of the lower part of the inner periphery of ring 43 with sleeve 47. The arrangement constitutes a governor-operated cam. When the rotor reaches a predetermined speed, the weight 45 will move outwardly by centrifugal force, overcoming the force of spring 46 and drawing cam 42 inwardly out of the path of the end of the breaker point lever 38. If the "hit or miss" ignition is not desired, the ring 43 may be clamped to the rotor so as not to turn independently thereof.

In addition to the above cam, whether it be of the centrifugally-operated or fixed type, there is provided an auxiliary cam 48, which enables an additional opening and closing of the breaker points 33 and 34 and effects certain advantages, which will hereinafter be pointed out in connection with the operation of the magneto. This auxiliary cam constitutes one of the main features of my invention. It consists of a flange formed on a plate 49 fixed to an end face of the rotor. It is preferably independent of the other cam, so that in cases where "hit or miss" ignition is employed, it does not have to partake of the movement of, or be effected by, the centrifugally actuated cam.

The rotor 18 is, as described, fixed to a sleeve-like shaft 47 and the latter is journalled on a hollow stud 50 (Fig. 2) which has a flange 51 (Fig. 6) secured by cap screws 52 to plate 15. One end of stud 50 is split, as at 53, and the split parts may be drawn together by a cap screw 54. This stud is adapted to be clamped in various positions of angular adjustment to a suitable support, such as a cylindrical hub *h* (Fig. 7) which is partly telescoped in the stud and which may be assumed to be a hub on the crank case of an internal combustion engine. Through this hub, the engine crankshaft *c* passes for connection to the flywheel, indicated in part at *f*. The crankshaft passes freely through stud 50 with ample clearance. The driving connection with the rotor may be effected by a stud 55 fixed to the inner face of the flywheel, extending toward the rotor, and into a hole 56 therein. As shown in Fig. 7, there is radial freedom for the stud 55 to move in hole 56 and, should the flywheel not run true, its irregularities of movement will not be communicated to the rotor. The latter has its own bearing, on which it turns truly, and the driving of it from the crankshaft is effected in the described, or any other equivalent way, which will prevent the rotor from partaking of any irregularities in the running of the crankshaft.

The plate 15 has a circular flange 57 (Fig. 1) extending toward the flywheel and adapted, although not shown, to cooperate therewith to enclose the working parts of the magneto in the usual and well understood way.

Lubrication for the rotor is provided by a wick 58 (Fig. 2) extending from an oil reservoir 59 upwardly into stud 50 and axially along the same in a slot formed therein. Part of the wick rests directly against the rotor shaft 47. The reservoir 59 is formed between two pressed metal pieces 60 and 61, the former being suitably attached to plate 15 and the latter have a tight fit in piece 60. Oil may be supplied to the reservoir through an oil cup 62 by way of a passage 63.

The operation of the magneto will next be described. It will be noted that there are two positions of the rotor in each revolution thereof when the cores 16 are interconnected. The rotor may be utilized, in either or both of these positions, to build up flux through cores 16, preparatory to the subsequent production of a spark by effecting a sudden decrease of flux through the cores. As shown, a spark is produced in only one of these positions and it is particularly desired and one of the problems of this invention to prevent the production of any substantial spark, when the rotor is in the other position. Fig. 1 shows the rotor in the position which it occupies just prior to the production of the spark. A slight additional clockwise movement of the rotor will cause cam 42 to separate the breaker points 33 and 34 and create a spark. If the breaker points 33 and 34 were allowed to remain open during the next time when the rotor projections interconnect the cores 16, a change of flux would occur in the cores and a spark would be created. This spark would not be so effective as the one produced on the preceding interconnection of the cores by the rotor but it would be substantial enough to cause trouble by its occurrence at an undesired time. To kill this undesired and so-called "maverick"

spark, the breaker points might be maintained closed except at the desired sparking time. Such a plan would restrain a change in flux through the cores at the undesired time due to the choking influence of the short circuited primary winding and would hold the flux change down to such limits that no substantial spark would be produced. But such plan also means that the flux change through the cores 16 at the desired time is also restrained. Flux has to be built up against the opposing influence of the short circuited primary winding and the change takes place slowly. While this can be done, if the cores are interconnected by the rotor for a sufficiently long time interval, it is far more desirable to permit flux to build up in cores 16 while the breaker points are open so that the change takes place as rapidly as possible without any restraining influence.

With the above considerations in mind, the plan adopted is a compromise between the two plans above outlined. It combines the advantages of both plans and eliminates the disadvantages. The cam 42 is the sort which would be used where the plan is to maintain the breaker points closed except at the one sparking time during each revolution of the rotor. Consequently, the advantage of killing the "maverick" spark will be obtained. But this cam is supplemented by the auxiliary cam 48, the purpose of which is to open the breaker points and thereby remove the restraining influence of the short circuited primary winding, as the rotor moves into position to interconnect the cores 16 just prior to the sparking time. Thus the flux is allowed to build up rapidly in cores 16 while the primary circuit is open. The action of the auxiliary cam can best be visualized from a consideration of Figs. 3 and 4. Fig. 3 shows the rotor projections 19 approaching the cores 16 to interconnect them and the auxiliary cam 48 as about to move the breaker point lever to open the breaker points. The cam 48, having opened the breaker points, maintains them open while the projections 19 swing into position to interconnect the cores and during an additional period, viz. up to the point shown in Fig. 4. During all of the period while the projections 19 fully cover the faces 17 of cores 16, the breaker points are held open to facilitate the establishment, as rapidly and completely as possible, of magnetic flux in the cores. The breaker points close at about the position of the rotor shown in Fig. 4. This enables the flux, built up in the cores as described, to be held by the closed circuited primary winding until the rotor has moved to the most effective position for the release of the flux. Such position is shown in Fig. 1. The rotor projections 19 are then separated from cores 16 by substantial air gaps and are engaged with projections 21 to shunt the flux from the magnets in a low reluctance path lying wholly outside the cores. Hence, when the breaker points separate, the restraining influence of the short circuited primary winding is removed and, in addition, a better path is afforded for the flux by way of the shunt extensions 21. As a consequence, an exceedingly rapid decrease in flux occurs, due to the combined effects of the optimum position of the rotor and the low reluctance shunt path. An exceedingly effective spark results when the breaker points separate.

Shortly following the projection of the spark, the rotor moves into the position in Fig. 5, in which the breaker points close and remain closed until again opened by cam 48. Particularly, they remain closed during the next succeeding interval when the rotor interconnects the cores for the purpose of killing the maverick spark, which would otherwise be created at a point in the movement of the rotor spaced about 180 degrees from the point at which the desired spark is created.

As above alluded to, the invention is not necessarily restricted in all its features to a rotor having only two projections. There may be more than two such projections and the invention is concerned with a magneto rotor which has at least two projections and may have more. For example, in Fig. 9 a rotor is shown having four projections and there is an advantage accruing from the use of the additional projections in that the magnets are never entirely open circuited. There is always available some low reluctance path for the magnetic flux. There are four ranges of travel of the rotor during each revolution thereof, in which the cores 16 are magnetically interconnected to afford a path for the magnetic flux. There are four other ranges of travel of the rotor during each revolution thereof, in which the shunt projections 21 are interconnected by the magnetic rotor to afford an alternative path for the flux; and the first-named and second-named ranges overlap so that there is never a time when the magnets are open circuited and without a path of low reluctance. The flux from the magnets alternately passes through the cores 16 and through the projections 21, first through one and then through the other. And the path through cores 16 is not broken until the path through projections 21 is established and the last named path is not broken until the path through the cores is again established. This results in markedly improved efficiency and is the preferred arrangement.

The arrangement of Fig. 9 differs from Fig. 1 only by the addition of the rotor projections 64, of the same size and shape as the projections 19 but disposed at right angles thereto. The auxiliary cam 48 has been

changed slightly and is designated 48'. All other parts are marked with the same reference numerals as used in Figs. 1 to 8.

The operation of the magneto shown in Fig. 9 is essentially no different from that shown in Fig. 1 except for the addition of the four additional paths for the magnetic flux which are afforded by the addition of the two projections 64. A spark is produced at only one of the four positions in which the cores 16 are interconnected although, as above noted, more than one spark per revolution may be produced. The production of a spark at the other positions is prevented. Tracing the operation in detail, Fig. 9 shows the rotor in the position which it occupies just prior to the production of the spark. A slight additional clockwise movement of the rotor will cause cam 42 to separate the breaker points 33 and 34 and produce a spark. The rotor projections 19 have moved far enough away from cores 16 to create an effective air gap and to make an alternative shunt circuit through projections 21. While this has been happening, the flux built up in cores 16, while projections 19 were interconnecting the same, has been held by the closed circuited primary winding. On an opening of the breaker points, this flux will be released and rapidly and practically instantaneously die out of cores 16 because of the other and better path available through projections 21. The rotor projections 64 are not functioning at this time. Shortly after the production of the spark, the rotor assumes the position shown in Fig. 12, in which the breaker points close and remain closed for a substantial interval. The projections 19 are then interconnecting the shunt projections 21 and the projections 64 have moved part way into the position in which they interconnect cores 16. There will be but a comparatively small flux change in the cores because the shunt circuit through projections 21 has not yet been broken. On continued rotation, the projections 19 leave the shunt projections and the shunt magnetic circuit is broken but the projections 64 have already established an alternative circuit through cores 16, thus avoiding open circuiting of the magnets. During all of the time while the projections 64 are travelling adjacent cores 16, the primary circuit is closed and no spark is therefore produced. The projections 64 next move into range to interconnect the shunt projections 21 but before they leave cores 16, the projections 21 will have been interconnected by projections 19. The primary circuit is still closed and maintained so during all the range of travel of projections 19 in interconnecting relation with cores 16. Continued movement of the rotor will carry the projections 19 away from the cores 16 but not until they have come into interconnecting relation with shunt projections 21. Then, when the projections 19 swing away from projections 21, the projections 64 will again have moved into interconnecting relation with cores 16. Then the projections 64 move out of connecting relation with cores 16 but not until they have moved into such relation with shunt projections 21. During all this time the breaker points remain closed and no spark is produced by the shiftings of the magnetic circuit described. The rotor now occupies the position shown in Fig. 10. The projections 19 are moving into connecting relation with the cores 16 and the projections 64 are moving out of such relation with projections 21. The breaker points will be opened by the auxiliary cam 48' and some flux will build up in cores 16 but there still exists the shunt path through projections 21 and the flux will not build up completely until projections 64 leave projections 21, which occurs before the breaker points again close. Immediately the shunt path is broken, the flux builds up almost instantaneously in cores 16 due to the open primary circuit. The breaker points close as the rotor moves into the position shown in Fig. 11 and at a time when projections 64 are separated from projections 21 by a substantial air gap while cores 16 are still substantially covered by projections 19. The closed primary circuit has the effect of resisting flux change in cores 16 while the rotor is moving from the position shown in Fig. 11 to that shown in Fig. 9. Meanwhile, the rotor projections 19 move away from cores 16 and into covering relation with shunt projections 21, preparatory to the spark producing opening of the breaker points above described in connection with Fig. 9.

It will thus be seen that the invention enables the suppression of the spark as the result of magnetic changes effected by the rotor at all but certain selected positions where a spark is desired. Also that the form of invention shown in Fig. 9 is substantially similar so far as the described suppression of spark is concerned, differing only in that the spark is suppressed at two other positions of the rotor and in that better results are obtained due to providing at all times a closed circuit from the magnetic source.

It is not necessarily essential for all purposes that the main and auxiliary breaker point cams be structurally independent as heretofore disclosed and in Fig. 13 both are shown as integral parts of a one piece annular member 70. This member, as shown, is fixed to the rotor by the bolts 71 but, if governor action is desired, it may be had by removing these bolts, the member 70 then being free to turn on the stud 44 as a pivot. It will also be necessary in such case to add a weight and return spring, such as are shown at 45 and 46, respectively, in Fig. 1.

The member 70 has two cam lobes 72 and 73 which may be used interchangeably as the main and auxiliary cams. For clockwise rotation of the rotor, the lobe 72 will act as the main cam and lobe 73 as the auxiliary cam. For anti-clockwise rotation, the same member 70 will serve without change,—the lobe 73 then serving as the main cam and the lobe 72 as the auxiliary cam. If this same member 70 is converted to secure the governor action, the auxiliary cam 73 although integrally united to the main cam 72 will function satisfactorily because it is of short length (as compared to cam 49) and is located substantially diametrically opposite the pivot point 44. Radial movement of cam 72 can then be effected without effecting any substantial degree of radial movement of cam 73.

The invention has utility in a rotary magneto irrespective of whether or not there is a "maverick" spark to be killed. It enables the extra opening and closing of the breaker points for the purpose of allowing flux to build up in the main magnetic circuit (through cores 16) under the best conditions, viz. that of an open circuited primary winding. The flux, thus built up, is held against substantial diminution while the inductor moves into an optimum position for the break of the main magnetic circuit, at which time the breaker points open by the usual means,—cam 42.

The features stressed in the description of the operation of the invention are the essential ones. The invention may be embodied in many forms differing specifically from that herein shown. The use of two banks of magnets, while desirable, is not necessarily essential for all purposes. The same effects, but differing in degree, would also be obtained if one coil unit were omitted from one core 16. Also, these two coils need not necessarily be connected in series as shown. They might even function as independent units. Various other changes may readily be made and the details hereinabove described are not to be considered essential to my invention except insofar as they are included in the appended claims.

What I claim is:

1. In a rotary magneto, a source of magnetic flux, pole pieces connected one to each polar extremity of said source, a rotor having projections thereon movable in close proximity to said pole pieces and adapted during each revolution of the rotor to make and subsequently break a magnetic circuit from said source through said pole pieces and rotor, primary and secondary windings associated with said magnetic circuit normally-engaged but relatively-movable breaker points, an electrical circuit including said primary winding and breaker points and arranged to be opened and closed by the separation and engagement respectively of said breaker points, and means movable with the rotor for opening the breaker points when the rotor moves into position relatively to said pole pieces to make said magnetic circuit and for closing them prior to the breaking of said magnetic circuit and again opening said points when the rotor moves into position to break said magnetic circuit and again closing them after said last named break.

2. In a rotary magneto, a source of magnetic flux, pole pieces connected one to each polar extremity of said source, a rotor having projections thereon movable in close proximity to said pole pieces and adapted in a plurality of positions during each revolution of the rotor to make and subsequently break a magnetic circuit from said source through said pole pieces and rotor, primary and secondary windings associated with said magnetic circuit, normally-engaged but relatively-movable breaker points, an electrical circuit including said primary winding and breaker points and arranged to be opened and closed by the separation and engagement respectively of said breaker points, and means movable with the rotor for opening the breaker points when the rotor moves into one but not the other of said positions and for closing them prior to the movement of the rotor out of such position and for again opening the breaker points when the rotor has moved out of such position far enough to cause an effective break in the magnetic circuit and for shortly after closing the breaker points and maintaining them closed while the rotor passes through the other of said positions.

3. In a rotary magneto, a source of magnetic flux, pole pieces connected one to each polar extremity of said source, a rotor having projections thereon movable in close proximity to said pole pieces and adapted during each revolution of the rotor to make and subsequently break a main magnetic circuit from said source through said pole pieces and rotor, extensions one from each pole piece extending into the path of said rotor projections for cooperation therewith to make a shunt magnetic circuit from said source shortly before the main magnetic circuit is broken and to subsequently break the shunt circuit, primary and secondary windings included in the main magnetic circuit but lying outside said shunt magnetic circuit, normally-engaged but relatively-movable breaker points, an electrical circuit including said primary winding and breaker points and arranged to be opened and closed by the separation and engagement respectively of said breaker points, and means movable with the rotor for opening the breaker points when the rotor moves into position relatively to said pole pieces to make said main magnetic circuit and for closing them

prior to the breaking of said main magnetic circuit and prior to the establishment of said shunt circuit and for again opening said points when the rotor moves into position to break said main magnetic circuit and while said shunt circuit is established and again closing them after said last named break.

4. In a rotary magneto, a source of magnetic flux, pole pieces connected one to each polar extremity of said source, a rotor having projections thereon movable in close proximity to said pole pieces and adapted in at least two positions during each revolution of the rotor to make and subsequently break a main magnetic circuit from said source through said pole pieces and rotor, extensions one from each pole piece extending into the path of said rotor projections for cooperation therewith to make a shunt magnetic circuit from said source shortly before the first named magnetic circuit is broken and to subsequently break the shunt circuit, primary and secondary windings included in the main magnetic circuit but lying outside said shunt magnetic circuit, normally-engaged but relatively-movable breaker points, an electrical circuit including said primary winding and breaker points and arranged to be opened and closed by the separation and engagement respectively of said breaker points, and means movable with the rotor for opening the breaker points when the rotor moves into one but not the other of said positions and for closing them prior to the movement of the rotor out of said one of said positions and prior to its movement into position to make said shunt circuit and for again opening the breaker points when the rotor has moved far enough out of said one of said positions to create an effective break in the main magnetic circuit and to make said shunt circuit and for shortly after closing the breaker points and maintaining them closed while the rotor passes into and through the other of said positions.

5. In a magneto, a source of magnetic flux, a pair of pole pieces connected one to each polar extremity of said source and terminating with substantially opposed polar faces, a rotary inductor mounted between said faces and having substantially diametrically opposed projections to cooperate therewith and make and break a magnetic circuit from said source, primary and secondary windings on at least one of said pole pieces, normally-closed but relatively-movable breaker points, an electrical circuit including said primary winding and breaker points, said electrical circuit being opened and closed by the opening and closing of the breaker points, and means movable with the inductor for controlling the breaker points and causing them to open as the inductor moves into position to make said magnetic circuit and causing them to close prior to the breaking thereof and to again open them when the inductor moves into position to break said magnetic circuit and to again close them after said last named break.

6. In a magneto, a source of magnetic flux, a pair of pole pieces connected one to each polar extremity of said source and terminating with substantially opposed polar faces, a rotary inductor mounted between said faces and having substantially diametrically opposed projections to cooperate therewith and make and break a magnetic circuit from said source at least twice during each revolution of the inductor, primary and secondary windings on at least one of said pole pieces, normally-closed but relatively-movable breaker points, an electrical circuit including said primary winding and breaker points, said electrical circuit being opened and closed by the opening and closing of the breaker points, and means movable with the inductor for controlling the breaker points and causing them to open as the inductor moves into one but not the other of its positions in which a magnetic circuit is made and causing them to close prior to the breaking of such magnetic circuit and causing them to again open when the inductor moves into position to break such magnetic circuit and causing them to again close and remain closed while the inductor moves into the other positions in which a magnetic circuit is made.

7. In a magneto, a source of magnetic flux, a pair of pole pieces connected one to each polar extremity of said source and terminating with substantially opposed polar faces, a rotary inductor mounted between said faces and having substantially diametrically opposed projections to cooperate therewith and make and break a main magnetic circuit from said source, extensions one from each pole piece terminating with substantially diametrically opposed faces for cooperation with said inductor projections to make a shunt magnetic circuit from said source just prior to the breaking of the main circuit, primary and secondary windings on at least one of said pole pieces, normally-closed but relatively-movable breaker points, an electrical circuit including said primary winding and breaker points, said electrical circuit being opened and closed by the opening and closing of the breaker points, and means movable with the inductor for controlling the breaker points and causing them to open as the inductor moves into position to make the main magnetic circuit and causing them to close prior to the breaking thereof and prior to the making of said shunt magnetic circuit and to again open them when the inductor moves into position to break the main magnetic circuit and after the shunt circuit has been established and to again close them after said last named break.

8. In a magneto, a source of magnetic flux,

a pair of pole pieces connected one to each polar extremity of said source and terminating with substantially opposed polar faces, a rotary inductor mounted between said faces and having substantially diametrically opposed projections to cooperate therewith and make and break a main magnetic circuit from said source at least twice during each revolution of the inductor, extensions one from each pole piece terminating with substantially diametrically opposed faces for cooperation with the projections of the inductor to make a shunt magnetic circuit from said source just prior to the breaking of the main circuit, primary and secondary windings on at least one of said pole pieces, normally-closed but relatively movable breaker points, an electrical circuit including said primary winding and breaker points, said electrical circuit being opened and closed by the opening and closing of the breaker points, and means movable with the inductor for controlling the breaker points and causing them to open as the inductor moves into one but not the other of the positions in which the main magnetic circuit is made and causing them to close prior to the breaking of the main magnetic circuit thus formed and prior to making of the shunt circuit and causing them to again open after the shunt circuit has been made and after the inductor has moved far enough to create an effective break in the first named magnetic circuit and causing them to again close and remain closed while the inductor moves into and through the other positions in which a magnetic circuit is made.

9. A magneto, including a source of magnetic flux, pole pieces connected one to each polar extremity of said source, a rotary inductor cooperating with said pole pieces to make and break a magnetic circuit from said source, primary and secondary windings associated with said circuit, normally-closed but relatively-movable breaker points, an electrical circuit including said primary winding and breaker points and arranged to be opened and closed by said breaker points, means movable with said inductor and movable relatively thereto in response to variations in the speed thereof for opening said breaker points after said magnetic circuit has been broken and for subsequently closing said breaker points, and a second means independent of the first named means and movable with said rotor for opening said breaker points as the inductor approaches the position in which to make said magnetic circuit and for closing them after said magnetic circuit has been made and prior to the breaking thereof.

10. A magneto, including a source of magnetic flux, pole pieces connected one to each polar extremity of said source, a rotary inductor cooperating with said pole pieces in at least two positions during each revolution to make and break a magnetic circuit from said source, primary and secondary windings associated with said circuit, normally-closed but relatively-movable breaker points, an electrical circuit including said primary winding and breaker points and arranged to be opened and closed by said breaker points, means movable with said inductor and movable relatively thereto in response to variations in the speed thereof for opening said breaker points after the inductor moves out of one but not the other of said positions, and a second means independent of the first named means and movable with said inductor for opening said breaker points just prior to the time when the inductor moves into said one of said positions and for closing the breaker points before the inductor moves out of said one of said positions, whereby when the inductor moves into and through the other of said positions the breaker points are maintained closed.

11. In a magneto, a source of magnetic flux, pole pieces connected one to each polar extremity of said source, a rotary inductor having substantially diametrically opposed projections, said pole pieces extending into cooperative relation with said inductor and terminating closely adjacent the path of said projections in substantially diametrically opposed relation, said inductor by its rotation making and breaking a main magnetic circuit from said source, primary and secondary windings on at least one of said pole pieces, extensions one from each pole piece terminating with substantially diametrically opposed faces for cooperation with said projections to make and break a shunt magnetic circuit from said source in a low reluctance path outside said windings, a normally closed electrical circuit in which said primary winding is included, relatively movable breaker points to control said electrical circuit, and means for operating said breaker points including a governor operated cam movable with the inductor for opening the breaker points after said main circuit has been broken and said shunt circuit made and for shortly after closing said points, and an independent cam movable with the inductor for opening said points when the inductor moves into position to make said main circuit and for closing them before the main circuit is broken and the shunt circuit established.

12. In a magneto, a source of magnetic flux, pole pieces connected one to each polar extremity of said source, a rotary inductor having substantially diametrically opposed projections, said pole pieces extending into cooperative relation with said inductor and terminating closely adjacent the path of said projections in substantially diametrically opposed relation, said inductor by its rotation making and breaking a main magnetic circuit from said source in at least two ranges of travel during each revolution, primary

and secondary windings on at least one of said pole pieces, extensions one from each pole piece terminating with substantially diametrically opposed faces for cooperating with said projections to make and break a shunt magnetic circuit from said source in a low reluctance path outside said windings, a normally closed electrical circuit in which said primary winding is included, relatively movable breaker points to control said electrical circuit, and means for operating said breaker points including a governor operated cam movable with the inductor for opening the breaker points after the inductor moves out of one but not the other of said ranges and causes a break in the magnetic circuit through said windings and for subsequently closing said points and maintaining them closed while the inductor moves through the other of said ranges, and an independent cam movable with the inductor for opening said points while the inductor moves in said one of said ranges and for closing them before the inductor leaves such range to break the main magnetic circuit and before the inductor moves into position to establish said shunt circuit.

13. In a rotary magneto, a source of magnetic flux, pole pieces connected one to each polar extremity of said source, a rotor having a plurality of pairs of projections thereon, each such pair arranged to interconnect said pole pieces during a certain range of travel of the rotor, other projections from said magnetic source cooperating successively with said pairs of rotor projections to make and break a shunt magnetic circuit from said source, said rotor projections being so spaced and located with respect to said pole pieces and second named projections as to provide at all positions a closed magnetic circuit from said source either through said pole pieces or through said shunt path, primary and secondary windings on at least one of said pole pieces, normally-engaged but relatively-movable breaker points, an electrical circuit including said primary winding and breaker points and arranged to be opened and closed by the separation and engagement respectively of said breaker points, and means movable with the rotor for opening the breaker points when the pole pieces are interconnected by one pair of rotor projections and for closing them before said pair of projections move out of such interconnecting relation and for again opening them after the said pair of projections have moved out of such relation and into interconnecting relation with the shunt forming projections and for shortly thereafter closing said breaker points and maintaining them closed while the rotor moves into and through another range of travel in which said pole pieces are interconnected by a pair of rotor projections.

14. In a magneto, a source of magnetic flux, pole pieces connected one to each polar extremity of said source, shunt forming projections connected one to each polar extremity of said source, a rotor having a plurality of pairs of projections to cooperate successively with said pole pieces and shunt forming projections to maintain at all times a closed magnetic circuit from said source either through said pole pieces or through said shunt forming projections, primary and secondary windings on at least one of said pole pieces, a normally closed electrical circuit including said primary winding, and means controlled by movement of the rotor for opening, closing and again opening said electrical circuit while the rotor moves through a selected one of its several ranges in which a magnetic circuit is made and subsequently broken through said pole pieces and for thereafter closing said circuit and holding it closed while the rotor moves through another one of said ranges.

15. In a rotary magneto the combination of means comprising a magnetic source, cooperating pole pieces, an inductor means to cooperate with the pole pieces to establish magnetic circuits from said source through the pole pieces and inductor, the inductor and pole pieces being relatively rotatable so as to make and break successive magnetic circuits during each revolution, an electrical circuit arranged for inductive relation to all the magnetic circuits, a make and break device in said electrical circuit and operable by the rotation of the magneto for the spark producing operation, once in each revolution of said magneto, additional means mounted for operative movement by the rotating part of the magneto to open and close the electrical circuit before the part of the magneto's revolution occurs, when the flux in a particular one of the magnetic circuits is utilized in the aforementioned spark producing operation.

16. In a magneto of the rotary inductor type operable to successively establish maximum and minimum magnetic flux in different magnetic circuits, the combination of means for a magnetic field, an inductor, an electrical circuit, a usual make and break device for the latter operable to open and close upon continuous relative rotation of said means and inductor for a single spark producing effect per revolution of said inductor, and additional means positioned so as to open and close said electrical circuit and fully establish said magnetic flux before said first mentioned make and break device opens said electrical circuit.

17. In a magneto of the rotary inductor type, the combination of an inductor, means to successively make and break a plurality of magnetic circuits through the inductor upon each relative and complete rotation of

the inductor and said means, a normally closed electrical circuit in inductive relation to said magnetic circuits, a usual make and break device operable by the magneto's rotation to open and close the electrical circuit once in each revolution after one of said magnetic circuits is broken and before the succeeding magnetic circuit is made, additional means operable by the magneto's rotation to open and close said electrical circuit before the time of said first-named opening to aid the establishment of magnetic flux in preparation for said first-named opening.

18. In a magneto of the rotary inductor type in which a plurality of maximum and minimum flux changes occur on each revolution, only one of which is desired for use in effecting a single spark producing result, the combination of means for a magnetic field, an inductor, an electrical circuit, a usual make and break device for the latter operable upon continuous relative rotation of said means and inductor for a spark producing effect once for each revolution of said magneto, a governor on the rotating part of the magneto operable to render said make and break device ineffective upon excessive speed of rotation, and an additional make and break device mounted on the rotating part of the magneto operable in each revolution of the magneto to open and close the electrical circuit, said additional make and break device being operable independently of the governor's action for controlling the electrical circuit to open it at a time in the magneto's rotation when if closed the electrical circuit would choke off a desired establishment of the flux.

19. In a rotary magneto the combination of means comprising a magnetic source, cooperating pole pieces, an inductor means to cooperate with the pole pieces to establish magnetic circuits from said source through the pole pieces and inductor, the inductor and pole pieces being relatively rotatable so as to make and break successive magnetic circuits during each revolution, an electrical circuit arranged for inductive relation to all the magnetic circuits, a make and break device in said electrical circuit and operable by the rotation of the magneto for the spark producing operation, once in each revolution of said magneto, additional means mounted for operative movement by the rotating part of the magneto to open and close the electrical circuit before the part of the magneto's revolution occurs, when the flux in a particular one of the magnetic circuits is utilized in the aforementioned spark producing operation, and a governor device on the rotatable part of the magneto operable on excessive speed of the magneto's rotation to put the first-mentioned make and break device out of operation, said additional means to open and close said electrical circuit being operable at any speed independently of the governor.

20. In a magneto of the rotary inductor type operable to successively establish maximum and minimum magnetic flux in different magnetic circuits, the combination of means for a magnetic field, an inductor, an electrical circuit, a usual make and break device for the latter operable to open and close upon continuous relative rotation of said means and inductor for a single spark producing effect per revolution of said inductor, and additional means positioned so as to open and close said electrical circuit and fully establish said magnetic flux before said first-mentioned make and break device opens said electrical circuit, and a governor rotatable with the magneto to put only the first-mentioned make and break device out of operation on excessive speed of the magneto.

21. In a magneto of the rotary inductor type, the combination of an inductor, means to successively make and break a plurality of magnetic circuits through the inductor upon each relative and complete rotation of the inductor and said means, a normally closed electrical circuit in inductive relation to said magnetic circuits, a usual make and break device operable by the magneto's rotation to open and close the electrical circuit once in each revolution after one of said magnetic circuits is broken and before the succeeding magnetic circuit is made, additional means operable by the magneto's rotation to open and close said electrical circuit before the time of said first-named opening to aid the establishment of magnetic flux in preparation for said first-named opening, and a speed governor operable to put the first-mentioned make and break device out of operation when the magneto speed exceeds a predetermined value, said additional means to open and close said electrical circuit being operable in each revolution of the magneto not only when the first-mentioned make and break device is in operation but also when it is not in operation.

In testimony whereof I have affixed my signature.

KENNETH A. HARMON.

Dec. 4, 1934. C H DAVIS, JR 1,983,072

IGNITION APPARATUS

Filed July 14, 1932 3 Sheets-Sheet 1

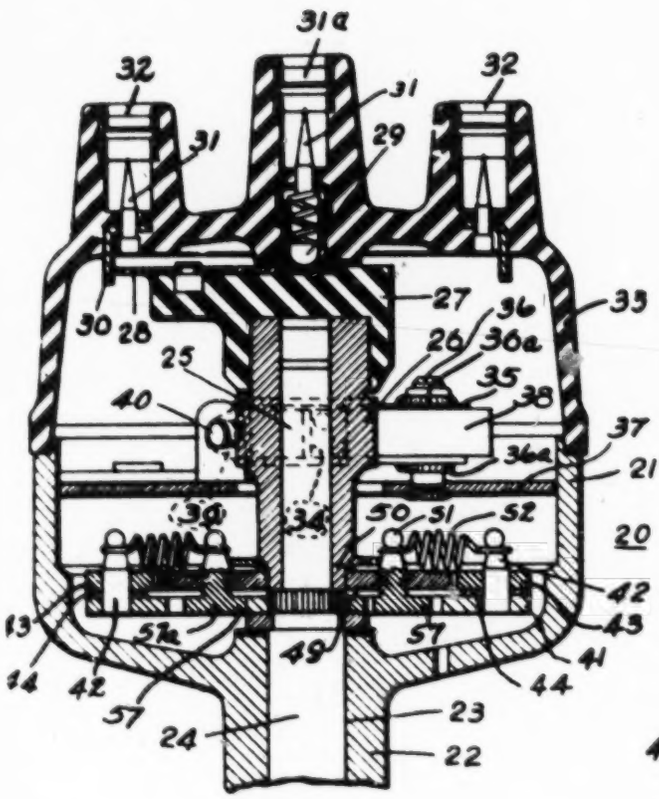

Fig. 1

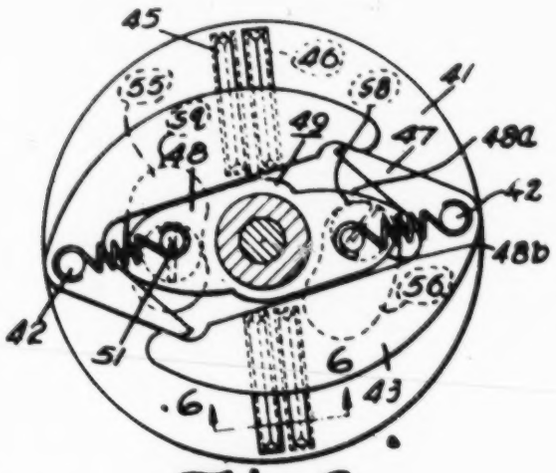

Fig. 2

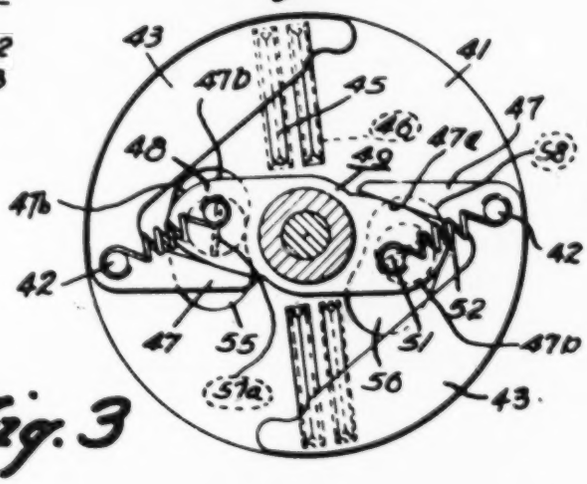

Fig. 3

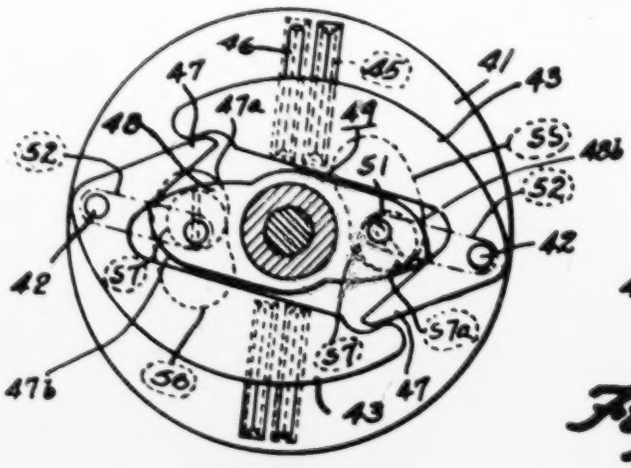

Fig. 5

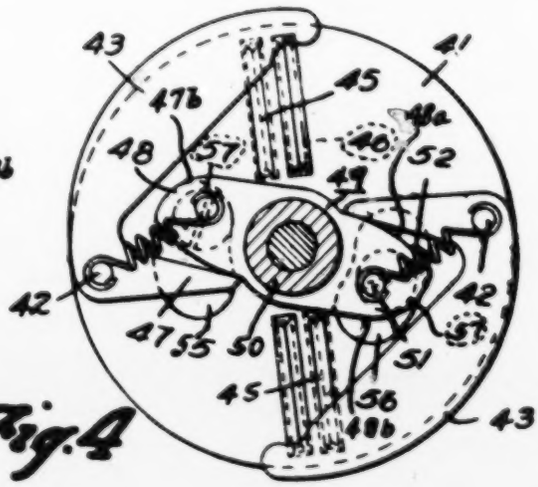

Fig. 4

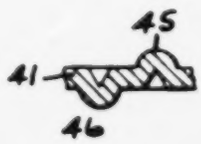

Fig. 6

Inventor

Charles H. Davis, Jr., deceased

by John T. Fitzsimmons, Administrator

By Spencer Hardman & Fehr

Attorneys

P-247

Dec. 4, 1934. C. H. DAVIS, JR 1,983,072

IGNITION APPARATUS

Filed July 14, 1932 3 Sheets-Sheet 2

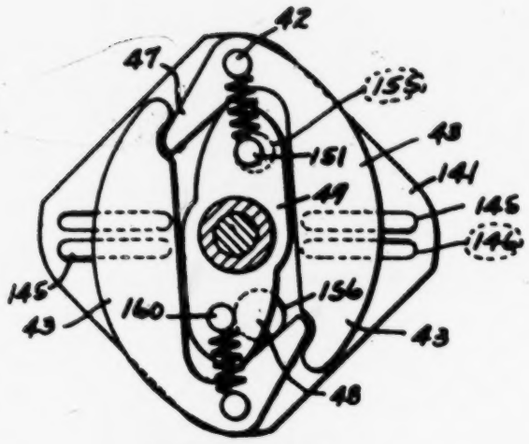

Fig 7

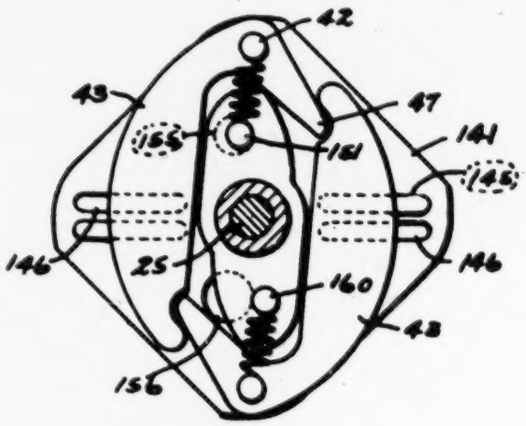

Fig 8

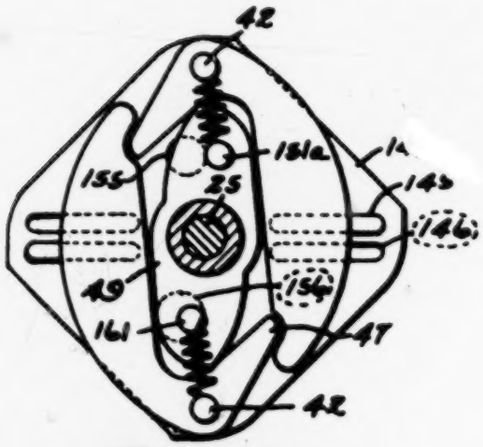

Fig. 9

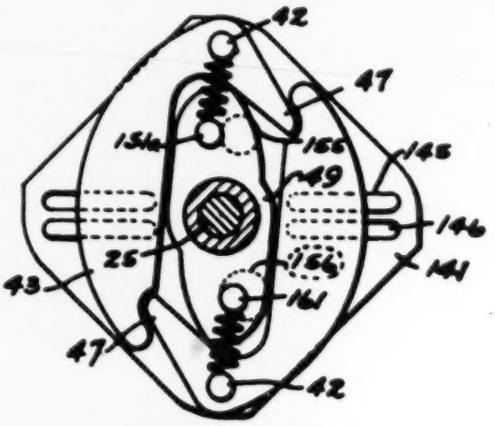

Fig. 10

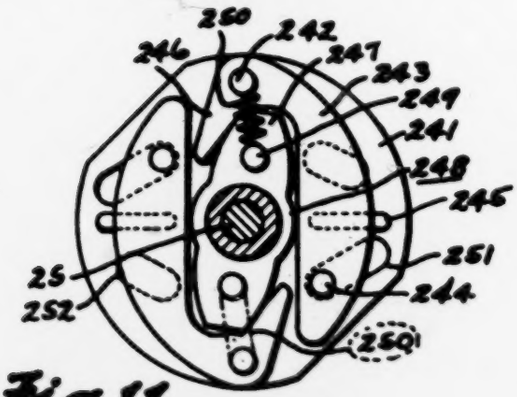

Fig. 11

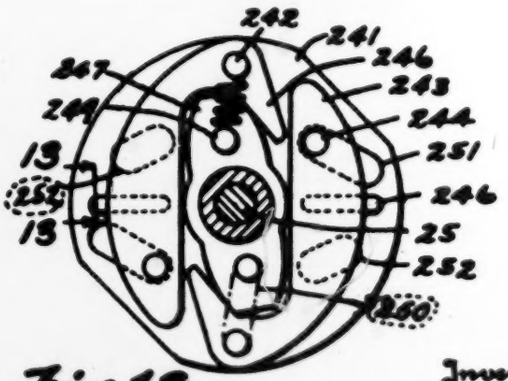

Fig. 12

Fig. 13

Inventor

Charles H. Davis, Jr., deceased

by John T. Fitzsimmons, Administrator

By

Spencer Hardman & Fehr

Attorneys

Dec. 4, 1934. C. H. DAVIS, JR. 1,983,072

IGNITION APPARATUS

Filed July 14, 1932 3 Sheets-Sheet 3

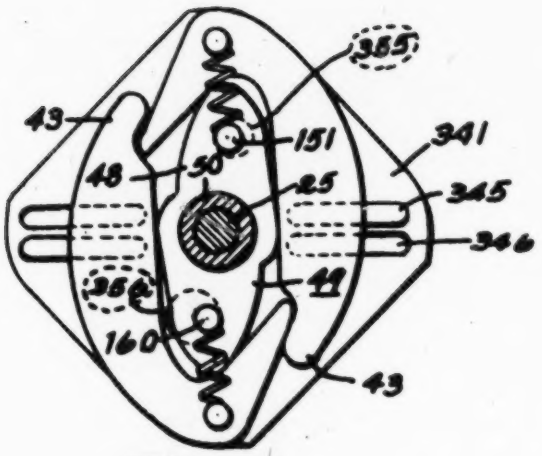

Fig 14

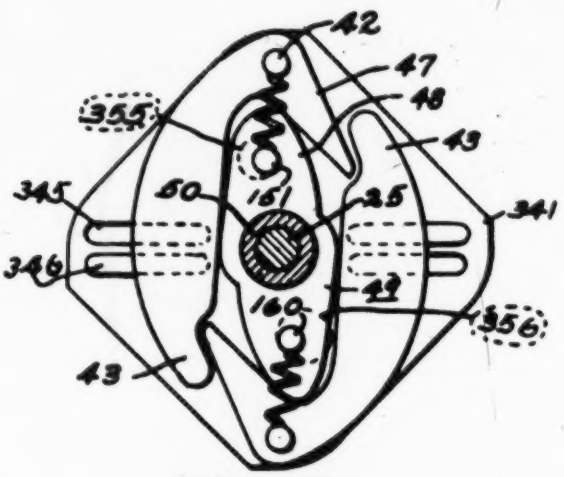

Fig 15

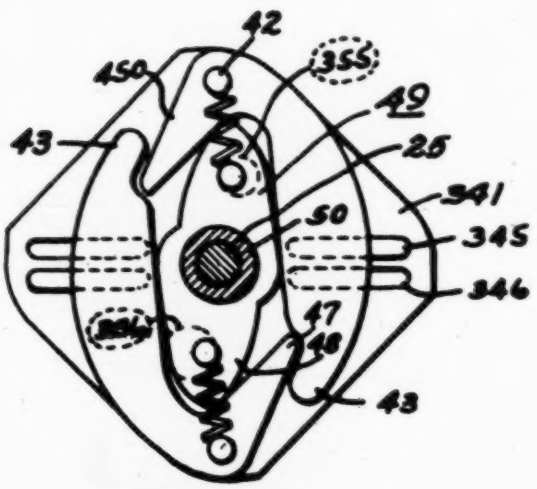

Fig 16

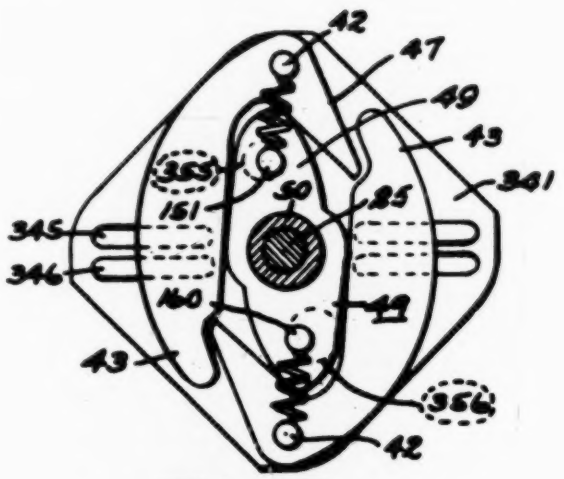

Fig 17

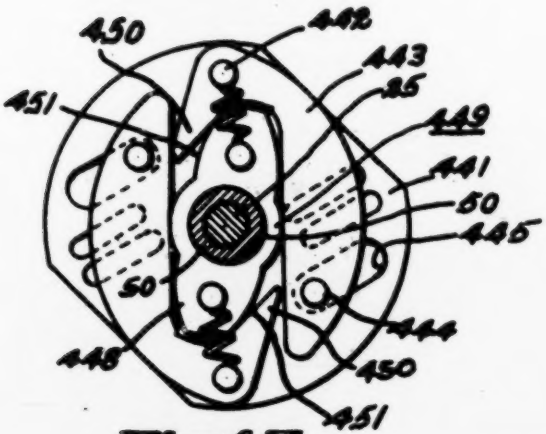

Fig 18

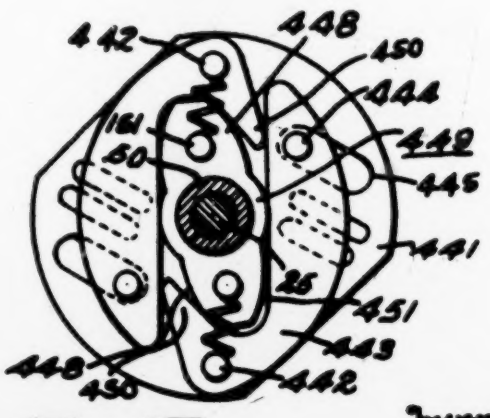

Fig 19

Inventor

Charles H. Davis, Jr., deceased
by John T. Fitzsimmons, Administrator

By Spencer Hardman & Fehr

Attorneys

Patented Dec. 4, 1934 1,983,072

UNITED STATES PATENT OFFICE

1,983,072

IGNITION APPARATUS

Charles H. Davis, Jr., deceased, late of Anderson, Ind., by John T. Fitzsimmons, administrator, Anderson, Ind., assignor, by mesne assignments, to General Motors Corporation, Detroit, Mich., a corporation of Delaware

Application July 14, 1932, Serial No. 622,471

16 Claims. (Cl. 64—90.5)

This invention relates to ignition apparatus for internal combustion engines, and more particularly to ignition apparatus having an engine speed responsive device which controls the angular relation between the ignition timer cam and the engine part which drives it, whereby to vary the timing of the ignition impulse relative to the cycle of engine operation.

An object of the present invention is to provide an ignition apparatus with a universal speed responsive device which is efficient and reliable in operation. This is accomplished by providing a speed responsive device with a set of parts, such as weights, lever arms, studs, and supporting plate that are interchangeable and reversible so that by a slight rearrangement it may be made to operate in either direction of rotation of its driving shaft. Furthermore the speed responsive device provides a structure that will produce the proper spark advance for a wide range of engine speed and power conditions. In this manner the number of different parts required for producing a speed responsive device for an entire line of ignition apparatus to suit different engine requirements will be reduced to a minimum.

Further objects and advantages of the present invention will be apparent from the following description, reference being had to the accompanying drawings wherein a preferred embodiment of one form of the present invention is clearly shown.

In the drawings:

Fig. 1 is a cross-sectional view of a distributor embodying the present invention.

Fig. 2 is a plan view showing the speed responsive device for clockwise rotation.

Figs. 3 and 4 are plan views showing the speed responsive device in part and full advance positions, respectively.

Fig. 5 is an assembly of parts adapted for counterclockwise rotation.

Fig. 6 is a sectional view on the line 6—6 of Fig. 2.

Fig. 7 is a plan view of a modified form of a speed responsive device showing an assembly of the rotating parts adapted for clockwise rotation.

Fig. 8 is a plan view of an assembly of the rotating parts for counterclockwise rotation.

Fig. 9 is a plan view similar to Fig. 7 to permit a greater advance of the rotating parts for a clockwise rotation.

Fig. 10 is a plan similar to Fig. 8 to allow a greater advance of the rotating parts for a counterclockwise rotation.

Fig. 11 is a plan view of another modified form of the speed responsive device showing an assembly of the rotating parts adapted for a clockwise rotation.

Fig. 12 is a plan view showing the parts illustrated in Fig. 11 adapted for a counterclockwise rotation.

Fig. 13 is a sectional view taken on line 13—13 of Fig. 12.

Fig. 14 is a plan view of another modified form of a speed responsive device illustrating an assembly of rotating parts adapted for clockwise rotation.

Fig. 15 is a plan view of an assembly of parts used in the assembly shown in Fig. 14 and showing the parts adapted for counterclockwise direction.

Figs. 16 and 17 respectively are plan views similar to Figs. 14 and 15 respectively to permit a greater advance of the rotating part for a clockwise and counterclockwise rotation, respectively.

Fig. 18 is a plan view of another modified form of a speed responsive device showing an assembly of parts adapted to be rotated in a clockwise direction.

Fig. 19 is a plan view showing the parts illustrated in Fig. 18 adapted for a counterclockwise rotation.

Referring to the drawings, 20 designates an ignition distributor comprising a timer cup 21 having a shank 22 to provide a bearing surface 23 for an ignition timer drive shaft 24. The shaft has an extension 25 of smaller diameter providing a journal for a timer cam 26 mounted thereon and free to rotate relative thereto. The cam 26 is drivingly connected with, and supports a rotor 27 carrying a segment 28. One end of the segment 28 cooperates with a central, stationary distributor contact 29, and the other end of the segment cooperates with distributor inserts 30 arranged in a circular row. The contact 29 and inserts 30 are connected electrically with needles 31, the needle 31 engaging the strands of high tension cable leading from any suitable coil provided in the ignition circuit (not shown). This high tension cable is received by a central socket 31a of a distributor head 33. A series of sockets 32 are provided on the distributor head 33 in equally spaced relation and arranged in a circular row about the central socket 31a, these sockets 32 are adapted to receive wires (not shown) that are directed to the spark plugs

of an engine which the distributor 20 is attached.

The cam 26 cooperates with a rubbing block 34 of an insulating material 35 pivoted upon a stud 36 [illegible] by a plate 37 but insulated from the arm 35 by an insulating bushing 36a. The plate is mounted in any suitable manner within the cup 21. A leaf spring 38 electrically connected to the breaker arm 35 urges the rubbing block 34 toward the cam 26. The spring 38 serves to conduct the current to the circuit breaker lever 35 and a movable contact 39 carried thereby. When the cam is out of engagement with the block 34 the contact 39 is urged by the spring 38 into engagement with a stationary timer contact 40.

The shaft 24 carries and drives a weight supporting plate or base 41 to which are attached studs 42, each stud serving as a pivot post for a weight 43. Each weight 43 is spaced from the base 41 by a washer 44 and a rib 45. The plate is also provided with ribs 46. These ribs 45 and 46 are struck up from their respective surfaces of the plate as shown in Fig. 6. The rib 45 tends to reduce friction which would retard the movement of the weights 43 about their pivots 42. Each weight 43 is provided with a finger or tail piece 47 which engages a camming surface of an arm 48 of a lever 49. It will be noted that the arms 48 are provided with two different contours 48a and 48b. These contours are each adapted to engage the fingers 47 of the weights 43 in different combinations. Thus two different types of curves may be had with the same advance cam and either type of curve may be used in either clockwise or counterclockwise rotation depending on the way the different elements comprising the speed responsive device are assembled together to suit the requirements of a particular engine. In either case the lever 49 with the arms 48 must be assembled on the same shaft portion 50 having regard for the direction of rotation of the drive shaft 24. When the lever 49 is suitably attached to a shank portion 50 of the cam 26 the assembly is journalled upon the extension 25. Each of the lever arms 48 carries a post 51 and each post 51 is connected to its adjacent post 42 by a spring 52, said posts 51 are long enough to extend through apertures 55 and 56 provided in the plate 41.

Formed on each extension of the posts 51 is an eccentric portion 57, the post and eccentric are mounted in a predetermined relation upon the lever arms to control the angular movement of the timer cam with respect to the shaft 24. Each eccentric is provided with a slot 57a to facilitate in locating the eccentrics in a correct position upon the lever arms 48 for a predetermined angular movement of the cam 26 relative to the shaft 24. It is to be understood that the studs 51 with the eccentric portion 57 cam be mounted in an infinite number of positions relative to the arm 48 to provide for an infinite number of angular movements of the cam 26 relative to the shaft 24. The holes 55 and 56 are of such size as to receive the eccentrics in all of their possible assembled positions so as to permit a free movement between the plate 41 and the eccentrics to allow the advancing of the cam 26 relative to the timer drive shaft 24. Thus when the device is in operation, centrifugal force acting upon the weights will overcome the resistances of the springs 52 to permit the weights to swing out about their pivots toward the periphery of the plate 41, thereby causing the fingers 47 to rock along the surface 48a of the arms 48 and cause the lever arms to be rotated in a clockwise direction as viewed in Fig. 3, to advance the cam of the ignition timer. The lower end of the studs with the eccentric formed thereon extends into the holes 55 and 56, one of the eccentrics will cooperate with an edge 58 of the apertures 56 in the plate 41 the edge 58 determines the retard position of the cam, while another eccentric will cooperate with an edge 59 of the aperture 55 in the plate that will determine the position of the cam at maximum advance and at the same time limit the outward movement of the weights 43, as shown in Fig. 4. The speed responsive device as viewed in Figs. 2, 3 and 4 is assembled for a timer for which the timer cam shaft is to revolve in a clockwise direction.

If it is desired to adapt the speed responsive mechanism for an installation in which the timer shaft is revolved in a counter-clockwise direction, the plate 41, weights 43, lever 49 and the posts 42 and 51 are reversed as shown in Fig. 5. In other words, the plate 41 and associated parts are assembled in proper relation with respect to each other and are turned bottom upward from the position shown in Fig. 2 to the position shown in Fig. 5. Therefore, in such a construction when the weights swing out the lever 49 will be rotated in a counterclockwise direction relative to the shaft 24 and will advance the cam 26 in a counterclockwise direction. In Fig. 5 the plate has been reversed from that shown in Fig. 2, the weights, 43, pivoted upon the stud will now rest upon the ribs 46, these ribs tend to reduce friction which would retard the movement of the weights about the pivot 42 when the weights fly outward in a clockwise rotation as the cam 26 is rotated in a counterclockwise rotation.

Figs. 7 to 10 inclusive, show a modified form of the present invention for which a supporting plate or base 141 is provided with a plurality of spaced apertures 155 and 156 of different dimensions, each aperture determining the amount of advance of the timer cam for a particular type engine. It will be noted that the spaced apertures in the plate are not diametrically opposite. The plate 141 is provided with ribs 145 and 146 struck up from their respective surfaces. These ribs tend to reduce friction of the weights 43. This construction of the plate 141 performs in a similar manner as that described of the plate 41.

In the device shown in Fig. 7, a post 151 is long enough to extend into the aperture 155 in the plate 141, while another post 160 is free from the plate. This device operates in a similar manner as that shown in Fig. 2, thus centrifugal force will cause the weights 43 to swing out toward the periphery of the plate 141 and will cause the lever 49 to be rotated in a clockwise direction to advance the ignition timer as the speed increases. The lower end of the post 151 extending into the aperture 155 cooperates with plate 141 to provide a stop limiting the movement of the weights 43. When the post 151 is within the aperture 155 shown in Fig. 7, the cam can be advanced substantially 15° in a clockwise rotation. If it is desired to adapt the apparatus for an installation in which the lever 49 is revolved in a counter-clockwise direction to advance the cam 15° in a counter-clockwise direction, the plate 141, the lever 49, and the weights 43 are reverse upon a horisontal line of Fig. 7 and assembled as shown in Fig. 8. In such a construction the weights will swing out in clockwise direction and advance the arms 48 which in turn advance the cam 26 in a counter-clock-

wise direction. It is also necessary to assemble the posts 151 and 160 upon the proper face of the arms 48.

When an engine requires 25° advance of the cam, a post 161 of the speed responsive device is made long enough to extend into the hole 156 in the plate 141 while a post 151a will not extend to the plate 141. As shown in Fig. 9, the device is assembled so that the speed responsive device will be operated in a clockwise direction, that is, as the plate 141 is rotated in a clockwise direction the weights will swing out toward the periphery of the plate 141 in a counter-clockwise direction and advance the cam substantially 25° in a clockwise direction. If it is desired to adapt the apparatus for an installation in which the cam is advanced 25° in a counterclockwise direction the plate 141, lever 49, and the weights 43 are reversed upon a horizontal line of Fig. 9, and assembled as shown in Fig. 10. In such a construction the weights will swing out toward the periphery of the plate 141 in a clockwise direction and advance the cam substantially 25° in a counterclockwise direction. It will be necessary to assemble the studs 161, 151a, and studs 42 upon the proper face of the lever arms 48 and plate 141.

Figs. 11 and 12 illustrate another modified form of a speed responsive device having a supporting plate 241 to which are attached weight studs 242, each serving as a pivot for a weight 243. These weights are provided with pins 244 or lugs extending down from the lower surface of the weight 243. Each weight is spaced from the plate 241 by a spacer about the stud 242, not shown, and rests upon a rib or ridge 245 or 246 struck from the surfaces of the plate by a suitable punch and die device. The ribs formed are illustrated in Fig. 13. These ribs tend to reduce friction which would retard the movement of the weight levers 243 about their pivot posts 242. Each weight is provided with a finger 246 which engages an arm 247 of a lever arm 248. The arm is attached to the lower end of a cam shaft which may be journalled upon the reduced upper end 25 of the driving shaft 24 illustrated in Fig. 1. Each arm 247 carries a spring post 249; each post 249 is connected by a spring 250 with an adjacent post 242. The pins or lugs 244 extend into apertures 251 in the plate 241. Obviously, centrifugal force will cause the weights 243 and pins 244 to swing toward the periphery of the plate 241 and will cause the lever arms 247 to be rotated in a clockwise direction, as shown in Fig. 11, to advance the ignition timer cam as the speed increases; the pins extending into the apertures 251 cooperate with plate 241 to provide a stop limiting the outward movement of the weights 243.

If it is desired to adapt the apparatus for an installation in which the timer shaft is revolved in a counterclockwise direction, the plate 241 is reversed and the weights are reversed upon the posts 242 upon a horizontal line of Fig. 11 and assembled as shown in Fig. 12. It is to be understood that the posts 242 are assembled upon the proper face of the plate 241. Thus, the weights are arranged for clockwise rotation outwardly upon their pivot post 242. When the speed responsive device is at rest, the pins 244 will practically touch the inner edge of the apertures 251. When the pins 244 are within the apertures shown in Figs. 11 and 12 respectively, the cam is advanced substantially 28° in clockwise and counterclockwise directions respectively.

When an engine requires substantially 12° advance of the cam for either clockwise or counterclockwise direction of rotation the pins 244 upon the weights are placed within the apertures 252 in the plate 241. Therefore, the aperture 252 serves the same purpose as the apertures 251 when the speed responsive devices are assembled for engines requiring a smaller advance movement of the cam.

Figs. 14 and 15 inclusive show another modified form of the present invention having a supporting plate 341. The plate is provided with a pair of spaced apertures 355 and 356 of different dimensions, the apertures being substantially diametrically opposite each other, each aperture determining the amount of advance of the timer cam. The plate is provided with ribs 345 and 346 struck up from their respective surfaces and serves the same purpose as the ribs 45 and 46 do when the apparatus is in operation.

In the construction shown in Figs. 14 and 16 the assembly comprising the shaft 25 and the plate 341 and the assembly comprising the lever 49 and the cam 26 can be used for both a 15° and 25° advance of the ignition timer in a clockwise rotation. For a 15° advance, (see Fig. 14) the pin 151 extends into the hole 355 in the plate 341, while the other post 160 does not extend to the plate. Obviously centrifugal force will cause weights 43 to swing out toward the periphery of the plate 341 and will cause the lever 49 to be rotated in clockwise rotation to advance the ignition timer. The lower end of the pin 151 extending into the hole 355 cooperates with the plate 341 to provide a stop limiting the movement of the weights 43.

Should a 25° advance of the ignition timer be desired, the lever 49 and cam 26 assembly is rotated 180° on the shaft 25 so that the pin 151 will extend into the aperture 356 (see Fig. 16) or the pin 160 may have an extension extending into the aperture 356 and the pin 151 will not extend to the plate 341.

If it is desired to adapt the apparatus for an installation in which the timer shaft is revolved in a counterclockwise direction the assembly of the plate 341 is turned upside down and assembled to the shaft 25 and the lever 49 is turned upside down and assembled to the cam shank portion 50 and assembled as shown in Figs. 15 and 17. It is to be understood that the posts 42 and the pins 151, 160 are assembled upon the proper surfaces of the plate 341 and the lever arms 48 respectively. It will be noted that the weights 43 are reversed upon the posts 42 as shown in Figs. 15 and 17, whereby these weights are arranged for clockwise rotation outwardly upon their weight post 42. Therefore, in such a construction when the weights 43 swing out the lever 49 will be rotated in a counterclockwise rotation relative to the shaft 25, and will advance the timer cam 26 in a counterclockwise direction as viewed in Figs. 15 and 17.

Should the apparatus be assembled for a 15° advance of the ignition timer for a counterclockwise rotation of the timer shaft 25 the pin 151 will extend into the aperture 355 as shown in Fig. 15.

If it is desired to have the apparatus assembled so that a 25° advance of the ignition timer is provided for a counterclockwise rotation of the timer, the assembly comprising, the lever 49 and the cam 26 should be moved 180° so that the pin 151 will extend into the aperture 356, or the pin 160 may have a projection extending into the aperture 356 and the pin 151 will not extend into the

aperture 355. In this case the lever and cam assembly need not be rotated 180°.

Figs. 18 and 19 illustrate another modified form of a speed responsive device for which the different parts or elements comprising the speed responsive device may be reversible and interchangeable so that by a slight rearrangement it may be made to operate in either a clockwise or counterclockwise direction of rotation. Thus, the form illustrated in Figs. 18 and 19 comprises a weight plate 441 adapted to be mounted with either face up upon the shaft 25. Studs 442 are provided and adapted to be mounted on either face of the plate 441, each serving as a pivot for a weight 443. The weights are provided with projections or pins 444 adapted to extend into apertures 455 provided in the plate 441. The shaft 25 forms a bearing or journal for the sleeve 50 to which is attached a lever 449 having two arms 448. Each weight 443 has a tail piece 450 which cooperates with a cam edge 451 of the arms 448. Each arm has two symmetrical cam edges and these edges permit the weights to be turned over so that the tail pieces will cooperate with the opposite sides of the arms 448. This permits the same parts to be used with either a clockwise or counterclockwise rotation.

The weights each carry a projection 444 that projects into the slots or apertures 445 and in the plate 441, the projections cooperating with the ends of the slots limit the extreme inward and outward movement of the weights. From an inspection of Fig. 18 it is obvious that as the weights move outwardly, the tail pieces cam against the cam edges of the arms 448 of the lever 449 and advance the lever and timer cam angularly in a clockwise direction of rotation with respect to the shaft 25.

If it is desired to have the apparatus for an installation in which the timer shaft is revolved in a counterclockwise direction, the plate is reversed and assembled upon the shaft 25 as shown in Fig. 19. The weights 443 are also reversed upon their posts, whereby these weights are arranged for clockwise rotation outwardly upon their posts. Therefore in such a construction when the weights swing out, the arms 448 will be rotated in a counterclockwise rotation relative to the shaft 25, and will advance the timer cam in a counterclockwise rotation.

While the form of embodiment of the present invention as herein disclosed, constitutes a preferred form, it is to be understood that other forms might be adopted, all coming within the scope of the claims which follow.

What is claimed is as follows:

1. A speed responsive device comprising in combination; a drive shaft; a driven shaft; a plate having spaced apertures of different dimensions arranged in a non-diametrical relation with respect to each other, said plate adapted to be attached to said drive shaft with either face up dependent on the direction of rotation of said drive shaft; a lever arm adapted to be mounted with either face upon said driven shaft; a pivot post adapted to be carried on either face of said plate; a weight member having a finger, said weight adapted to be rotatably supported on said post with either face adjacent said plate whereby said finger may engage an edge of said arm to angularly adjust said driven shaft from a normal position; and means extending into either of said apertures in said plate and cooperating with said plate to limit the angular movement of said driven shaft in either direction from normal position with respect to said drive shaft.

2. A speed responsive device comprising in combination; a drive shaft; a driven shaft; a plate member carried by said drive shaft and having non-diametrical spaced apertures; a weight member pivotally carried by said plate, an arm member carried by said driven shaft; a stop member carried by said arm member and extending into and cooperating with one of said apertures of said plate to determine the limit of angular movement of said driven shaft with respect to said drive shaft in one direction from normal position; and each of said members capable of being reversed upon their respective carrying means to determine the limit of angular movement of said driven shaft with respect to said drive shaft in the opposite direction from normal position.

3. A speed responsive device, comprising in combination; a drive member; a driven member; and adjustable eccentric means carried by and positioned in predetermined association with said driven member, said eccentric means cooperating with means on said drive member to determine an angular relation of said driven member relative to said drive member.

4. A speed responsive device, comprising in combination, a drive member, a driven member, and a plurality of adjustable eccentric means carried by said driven member cooperating with said drive member controlling the movement of advance of said driven member relative to said drive member, one of said means determining the initial advance movement and another of said means determining the limit of advance movement between said members.

5. A speed responsive device comprising in combination a drive shaft; a driven shaft; a plate member having apertures attached to said drive shaft; weight members pivoted on said plate; a lever member carrying adjustable eccentric members, said eccentric members extending into said apertures of said plate and each of said eccentric members is constructed so that each member can be positioned with respect to each other to provide for a different operable condition for purposes set forth.

6. In a device of the character described, the combination comprising, a drive shaft; a driven member rotatably supported upon said drive shaft; a supporting plate having spaced apertures of different dimensions mounted upon said shaft; a lever arm secured to said driven member; a stud member carried by said lever arm and extending into one of said apertures, said stud cooperating with the said aperture to provide for an angular movement of said driven member relative to said drive shaft for one direction of rotation of the drive shaft; means for actuating said lever arm to provide said angular movement; and said supporting plate, lever arm including said stud member, and actuating means thereof are reversible, whereby the same set of parts function for another direction of rotation of said drive shaft.

7. In a device of the character described, the combination comprising; a drive shaft; a driven member; a supporting plate secured to said drive shaft, said plate having a plurality of non-diametrically spaced apertures of different dimensions; a lever arm connected to said driven member; a stud carried by said lever arm, said stud extending into one of said apertures to control a predetermined angular relation of said driven member relative to said drive shaft in one direction of

rotation; and said parts of said speed responsive device adapted to be reversed upon their respective parts to control a predetermined angular relation of said driven member relative to said drive shaft in another direction of rotation.

8. In a device of the character described, the combination comprising; a drive shaft; a driven shaft; speed responsive means for angularly adjusting the relation of said shafts, said means comprising a weight support having spaced apertures of different dimensions, each aperture providing for different angular relation between the shafts; a pivot post carried by said support; a weight member pivotally mounted on said post; a lever arm secured to said driven shaft and cooperating with said weight members; a stud secured to said arm and extending into one of said apertures to regulate an angular movement of said driven shaft relative to said drive shaft; said speed responsive means having parts so constructed that the same parts may be reversed to provide speed responsive means that will operate for either direction of rotation of said drive shaft.

9. A speed control means comprising, reversible members which include, in combination; a drive plate having a plurality of circumferentially spaced perforations therethrough; weight members pivoted upon said plate; a driven member; a lever connected to said driven member and having arms cooperating with said weight members; and adjustable means carried by one of said arms and projecting into one of said perforations to determine the limit of movement of said lever member relative to said drive plate.

10. A speed responsive mechanism comprising in combination, a drive plate having a plurality of circumferentially spaced perforations of different dimensions therethrough; weight members pivotally mounted upon said plate; a lever having arms cooperating with said weights to advance said lever; and adjustable eccentric means associated with said lever extending within one of said perforations to vary the angular relation of said lever relative to said drive plate.

11. A speed responsive mechanism comprising in combination; a drive plate having a plurality of circumferentially spaced perforations therethrough; weight members pivotally mounted upon said plate; a lever having arms, said arms cooperating with said weights to advance said lever member; and adjustable eccentric means associated with said arms on said lever cooperating with said perforations to form limits for each extreme movement of relative angular shift of the lever with respect to said drive plate.

12. A speed responsive mechanism comprising in combination; a driven shaft; a drive shaft, said shaft rotatably supporting said driven shaft; a weight plate attached to said drive shaft, said plate having spaced apertures therein; fly weights having fingers pivotally supported on said plate; a lever having arms supported by said driven shaft, said arms having edges adjacent said fingers, said fingers operable on said edges to angularly adjust said driven shaft with respect to said drive shaft from a normal position; and eccentric means secured to said arms, provisions for attaching said eccentric means to said arms into infinite positions relative to said arms, said eccentric means extending into and cooperating with said apertures to control the limit of angular relation of said shafts, and said parts of said speed responsive means being constructed so that said parts may be reversible and interchangeable to function for either direction of rotation of said drive shaft.

13. In a speed responsive device, the combination comprising a drive shaft; a driven shaft; eccentric means; provision for attaching said eccentrics to the driven member into infinite positions relative to the driven member; means for connecting the drive member with the driven member for angularly adjusting the driven member from a normal position with respect to the drive member in response to increase in speed; springs for returning said driven member to normal position; and a member connected to the drive shaft and provided with spaced apertures each for receiving one of said eccentric means in one of its positions of attachment to said driven shaft, said apertures being larger than said eccentrics and so arranged that when one of said eccentrics is in one of its positions of attachment to the driven member and extends into one of said apertures, said eccentric cooperates with the apertured member to provide a stop limiting the movement of the driven member in one direction from normal; and when another eccentric is in another position of attachment to said driven shaft and extends into another aperture, said eccentric cooperates with the aperture to provide a stop limiting the movement of said driven member in another direction from normal with respect to said drive shaft.

14. A speed responsive device comprising in combination, a drive shaft; a weight support member carried by said shaft, said member having a plurality of circumferentially spaced perforations of different dimensions therethrough, and said member adapted to be attached in various relations to said drive shaft with either face up dependent on the direction of rotation of said drive shaft; a plurality of centrifugal weights having camming portions and adapted to be mounted with either side up upon studs carried by said member; a driven shaft; a spider having camming arms adapted to be mounted with either side up upon said driven shaft, said driven shaft mounted on said drive shaft for angular displacement relatively thereto, said arms of said spider and camming portions of said weights being arranged so that the weights will move outwardly from said spider; coil springs connecting said arms with said studs to exert a restraining force upon the advancing movement of the advancing spider; and adjustable means carried by said spider extending into one of said perforations of said support to determine the limit of angular movement of said driven shaft with respect to said drive shaft.

15. In a device of the character described, the combination comprising; a drive shaft; a driven shaft journaled upon the drive shaft; a plate member having spaced apertures of different dimensions; an arm member carried by said driven shaft; a stud member supported by said arm member and adapted to extend into one of the apertures of the plate member to determine an angular movement of the driven shaft with respect to the drive shaft from normal position, and said stud member adapted to extend into another aperture of the plate member to determine another angular movement of the driven shaft with respect to the drive shaft from normal position and each of said members capable of being reversed upon their respective carrying means to regulate the angular movements of said shafts with respect to each other in an opposite direction from normal positions.

16. A speed responsive device comprising in combination; a driving member and a driven member arranged to rotate together but relatively movable; weight members pivotally supported on the driving member; a camming connection interposed between the weight members and the driven member for causing relative movement of the driving and driven members when the weights move outwardly; means associated with said driven member having provision for attaching same into infinite positions relative to said driven member and said means cooperating with said drive member controlling the limit of angular relation of said members; and spring means arranged to resist movement of the weight members.

JOHN T. FITZSIMMONS,
Administrator of the Estate of Charles H Davis, Jr., Deceased.

Sept. 3, 1935. E. P. LITTLEFIELD 2,013,541

INTERNAL COMBUSTION ENGINE

Filed July 5, 1934

Fig. 1.

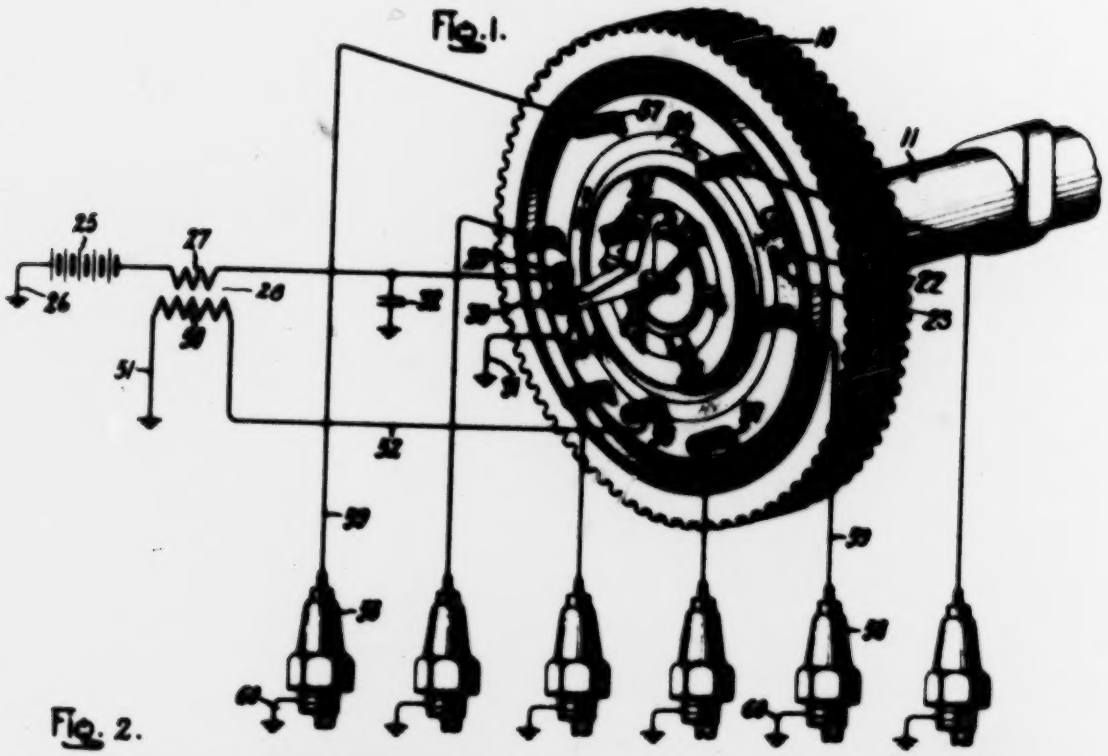

Fig. 2.

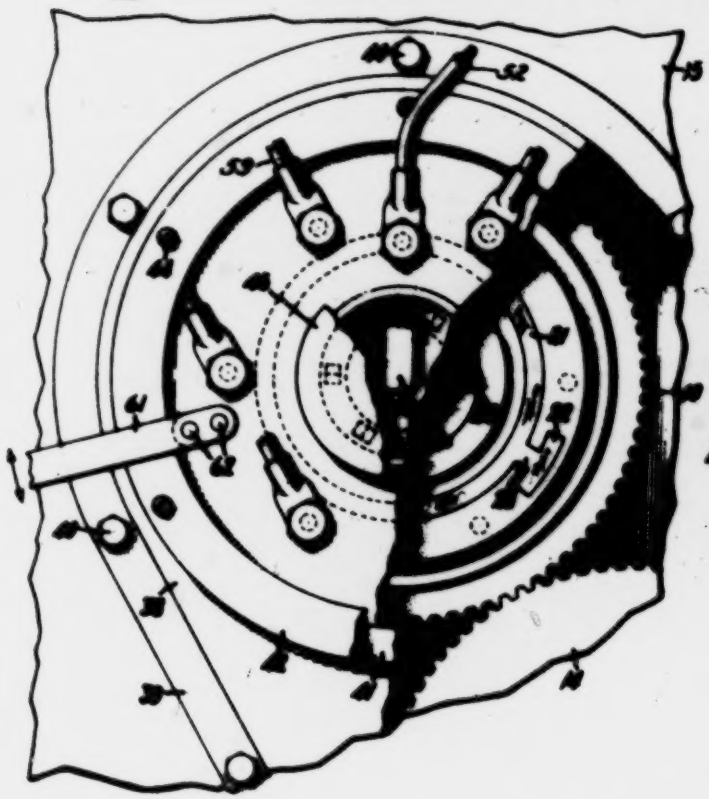

Fig. 3.

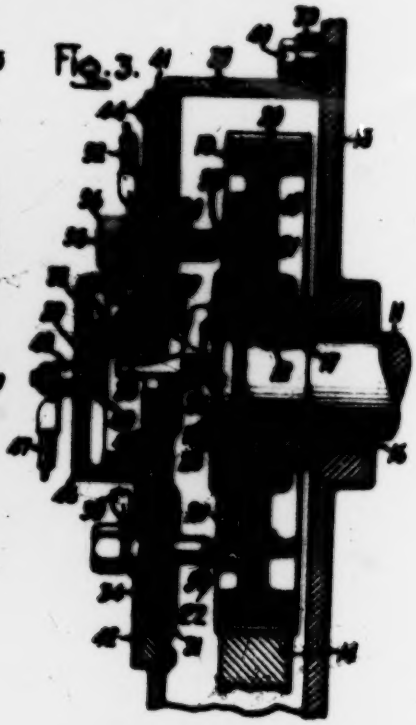

Inventor:
Edward P. Littlefield,
by Henry E. Dunham
His Attorney.

Patented Sept. 3, 1935 2,013,541

UNITED STATES PATENT OFFICE

2,013,541

INTERNAL COMBUSTION ENGINE

Edward P. Littlefield, Saugus, Mass., assignor to General Electric Company, a corporation of New York

Application July 5, 1934, Serial No. 733,736

8 Claims. (Cl. 123—146.5)

The present invention relates to internal combustion engines comprising a plurality of cylinders, a crank shaft connected to the pistons in the cylinders and a cam shaft driven from the crank shaft for operating various valves connected to the cylinders. More specifically, the invention relates to the above type of internal combustion engines which includes a timing gear on the cam shaft and an ignition system operated in response to movement of the cam shaft for effecting a succession of timed ignitions in the cylinders.

The object of my invention is to provide an improved construction and arrangement of a timing gear and an ignition system in the type of engines mentioned above which is reliable in operation and can be manufactured at comparatively low cost. This is accomplished in accordance with my invention by uniting the timing gear and certain elements of the ignition system into a single unit, more specifically by the provision of a timing gear made at least partly of insulating material and using the insulated portion of the timing gear as a support for certain elements of the ignition distributing system.

For a better understanding of what I believe to be novel and my invention, attention is directed to the following description and the claims appended thereto in connection with the accompanying drawing.

In the drawing, Fig. 1 represents a perspective view, partly diagrammatic, of a part of an internal combustion engine embodying my invention; Fig. 2 is a front view; and Fig. 3 is a sectional view of Fig. 2.

The arrangement comprises a timing gear 10 secured to an overhung end portion of a cam shaft 11 by means of a key 12 and a screw 13. The timing gear 10 is driven in well known manner from the crank shaft by any suitable means, in the present instance by means including a drive gear 14, meshing with the timing gear 10. The cam shaft 11 projects through an opening in a casing wall 15 of the engine and is supported on said wall through the intermediary of a bearing bushing 16.

The timing gear 10, according to my invention, comprises a steel hub 17 which is molded into a body made of insulating material such as a material including a phenolic condensation product or an artificial resin. The insulating body comprises a web 18 and an outer rim 19 with teeth 20. As stated above, the timing gear is united with and forms an element of an ignition distributing system. This ignition distributing system in the present instance comprises a metal or electric contact ring 21 integrally united with a radially spaced short segment 22 by a bridge 23. The ring 21 with the segment 22 and the bridge 23 is supported on, more specifically, and molded into, the front face of the web 18. The front face of the hub 17 is machined to form a plurality of projections or cam members 24. In the present instance I have indicated six projections which are uniformly angularly spaced, and concentrically arranged with both the cam shaft and the metal ring 21. The metal ring 21, the segment 22 and the aforementioned cam members or projections 24 form parts of the ignition distributing system. The latter has a primary circuit and a secondary circuit. The primary circuit, as diagrammatically indicated in Fig. 1, includes a source of electric energy, such as a battery 25, which on one side is grounded by a wire 26 and on the other side is connected to one end of a primary coil 27 of an ignition transformer 28. The other end of the coil 27 is connected to a circuit interrupting contact or breaker point 29 cooperating with a breaker point 30, which latter is grounded by a wire 31. A grounded capacitor 32 is connected to a point intermediate the primary coil 27 and the breaker point 29. The breaker point 29 is secured to a projection 33 of a plate 34 made of insulating material similar to the material of the body of the timing gear. The insulating plate 34 is disposed in front of the gear face. The breaker point 30 is secured to or forms a part of an arm 35 which is suitably supported on a fulcrum 36 held on the plate 34. Another portion of the arm 35 is disposed adjacent the face of the hub 17 and is biased toward said face by a spring 37. In the position indicated, the breaker points or circuit interrupting or making and breaking contacts 29 and 30 engage each other, permitting a flow of current from the battery 25 through the primary coil 27, through the breaker points and the ground. During rotation of the shaft 11 the arm 35 is successively engaged by the projections 24, causing the arm to swing automatically back and forth to effect opening and closing of the primary circuit.

As stated before, both breaker points are mounted on the plate 34 made of electric insulating or nonconducting material. This plate 34 forms a part of a cover enclosing the timing gear. The other part of the cover is formed by a member or side wall 38 which has a flanged portion 39 secured to the engine casing wall 15 by screws 40, and another recessed portion 41 to which the plate 34 is fastened by means including a ring 42 and a plurality of screws 44. The breaker points 29 and 30 are disposed in front of the plate 34 and enclosed by a cap 45 screwed onto an annular threaded projection 46 of the plate 34. The electrical connection between the primary coil 27 and the breaker point 29, as shown in Fig. 3, is accomplished by means including a wire 47 connected to a screw 48, which latter contacts a lug 49 having a portion secured to the breaker point 29.

P-260

The secondary circuit of the ignition distributing system comprises a secondary coil 60 of the ignition transformer 28 which has one end connected to ground by a wire 61 and another end electrically connected to the aforementioned metal ring 21 by means including a wire 62 and a brush 63. The brush 63, as shown in Fig. 3, is disposed in a bore of a plug 64 and biased towards the metal ring 21 by a spring 65. The spring is compressed by a nut 66 which is screwed onto an outer portion of the plug and also serves to fasten the end of the wire 62 to the plug. The secondary circuit also includes the aforementioned segment 22 electrically connected with the ring 21 by the bridge 23 and six brushes 67 supported on the plate 34 and bearing against an annular portion of the web 18, which annular portion includes the segment 22. Thus, during rotation of the web the segment 22 engages successively the different uniformly, angularly spaced brushes 67. The segment 22 and the ring 21 form a part of the secondary circuit interrupting means Each of the six brushes 67 is connected to a spark plug 68 by a wire 69. One electrode of each spark plug is grounded, as indicated at 68. When the segment 22 contacts one of the brushes 67, the secondary circuit is closed and current flows from one end of the coil 60 through the brush 63, the ring 21, the bridge 23, the segment 22, one of the brushes 67, the corresponding wire 69 and the corresponding spark plug 68 through the ground to the other end of the secondary coil 60.

The plate 34 has a sliding fit in the recessed portion 41 of the member 38. Adjustment of the ignition by advancing and retarding of the spark may be accomplished by rotating the plate 34. To this end a spark-retarding and advancing lever 61 (Fig. 2) is secured to the plate 34 by means of pins 62. The lever 61 may be moved by hand or by well known automatic means, not shown, to change the relative position between the secondary brushes 67 and the segment 22 which latter being fixed to the timing gear has a definite relation to the position of the cylinder pistons, not shown.

Timing of the engine is effected in the usual manner by changing the relative position between the cam shaft and the crank shaft, for example, in the present instance, by demounting the gear 14 to effect disengagement between this gear and the timing gear and thereafter slightly turning the crank shaft, and again mounting the gear 14 to mesh with the timing gear 16.

Having described the method of operation of my invention, together with the apparatus which I now consider to represent the best embodiment thereof, I desire to have it understood that the apparatus shown is only illustrative and that the invention may be carried out by other means.

What I claim as new and desire to secure by Letters Patent of the United States, is:

1. In an internal combustion engine, the commination of a cam shaft, a timing gear with a web being secured to the shaft, and an ignition distributing system including means secured to the web of the timing gear.

2. In an internal combustion engine, the combination of a cam shaft, a timing gear secured to the shaft, the timing gear having a web made of insulating material, and a hub having a face with a plurality of angularly spaced projections, and an ignition distributing system comprising a primary circuit with breaker points and a fulcrumed arm supporting one of the breaker points and being actuated by said projections.

3. In an internal combustion engine, the combination of a cam shaft, a timing gear secured to the shaft, the timing gear having a web made of insulating material, and an ignition system comprising a secondary circuit including a metal ring and a segment concentrically spaced from the ring and electrically connected therewith, the segment and the ring being supported on said web

4. In an internal combustion engine, the combination of a casing, a cam shaft supported on and projecting through the casing, a timing gear secured to an overhung portion of the shaft, means enclosing the gear comprising a member fastened to the casing and a plate made of insulating material and disposed in front of the gear, and an ignition distributing system comprising a primary electric circuit including breaker points, one point being fastened to the plate, an arm fulcrumed on the plate and supporting the other point and means on the timing gear for actuating the arm to effect opening and closing of the points during operation.

5. In an internal combustion engine, the combination of a casing, a cam shaft having an overhung portion projecting through the casing, a timing gear having a metal hub secured to the overhung shaft portion and a web made of a material including an artificial resin and united with the hub, means enclosing the gear including a plate disposed in front of the gear and made of a material including an artificial resin, and an ignition distributing system including a ring with a radially spaced segment molded into the web, a brush supported on the plate and engaging the ring and a plurality of brushes held on the plate and engaging an annular portion of the web including said segment whereby rotation of the gear causes in succession electric connections between the first named brush and the other brushes.

6. In an internal combustion engine, a casing, a cam shaft supported on the casing and having a portion projecting out of the casing, a timing gear fastened to said shaft portion and comprising a web made of a material including an artificial resin and a hub with a plurality of angularly spaced projections, an adjustable plate in front of the gear face secured to the casing and made of a material including an artificial resin, and an ignition distributing system comprising a primary and a secondary circuit, the primary circuit including breaker points supported on the plate and means including said hub projections for opening and closing the breaker points, the secondary circuit including brushes held on said plate and means secured to the web for effecting a succession of connections between one of the brushes and the other brushes.

7. In an internal combustion engine, the combination of a cam shaft, a timing gear having a web made of insulating material and a hub secured to the shaft, and an ignition distributing system comprising a primary and a secondary circuit, the secondary circuit including circuit interrupting means mounted on said web.

8. An article of manufacture comprising a gear having a hub with a plurality of angularly, uniformly spaced projections on its face and a web made of a material including an artificial resin, and an electric contact ring concentrically arranged with the projections and secured to the face of the web.

EDWARD P. LITTLEFIELD.

Nov. 2, 1937. E. V. HENNECKE ET AL 2,097,662

UNIVERSAL MOUNTING FOR WINDSHIELD WIPER MOTORS

Original Filed Aug. 23, 1933 3 Sheets-Sheet 1

Fig. 1.

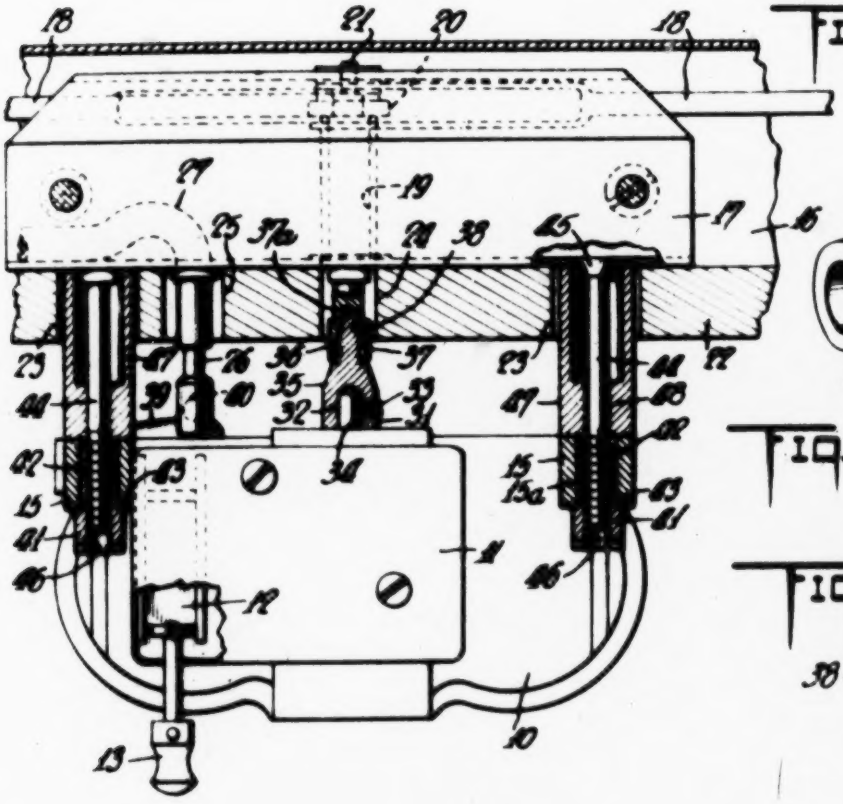

Fig. 2.

Fig. 3.

Fig. 4.

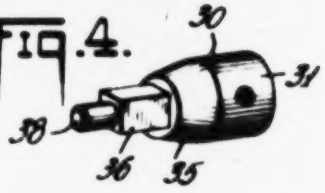

Fig. 5.

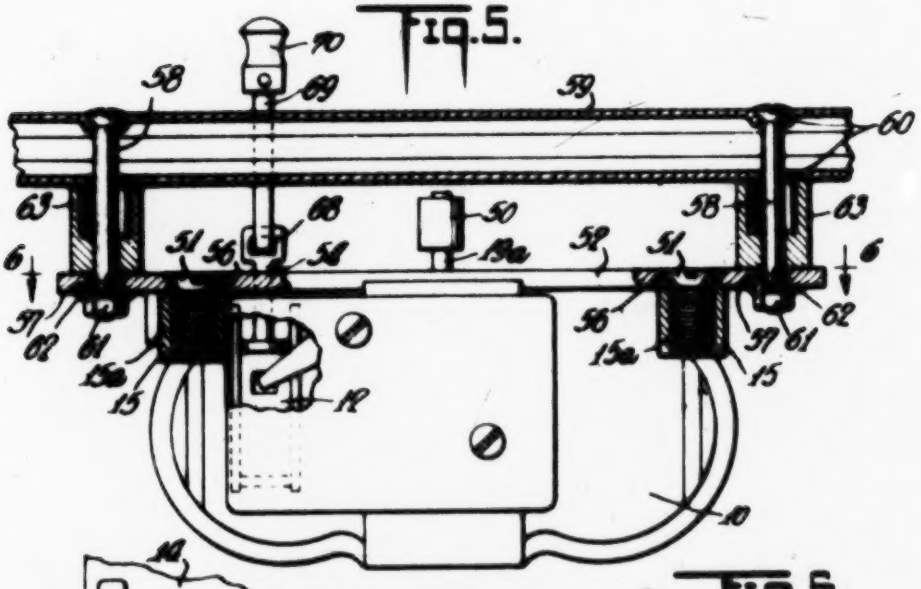

Fig. 6.

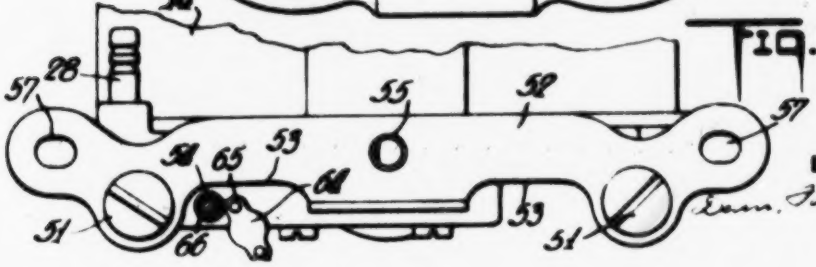

INVENTORS
Earle V. Hennecke
David Ruskin
BY
ATTORNEYS

Nov. 2, 1937. E. V. HENNECKE ET AL 2,097,662

UNIVERSAL MOUNTING FOR WINDSHIELD WIPER MOTORS

Original Filed Aug. 23, 1933 3 Sheets-Sheet 2

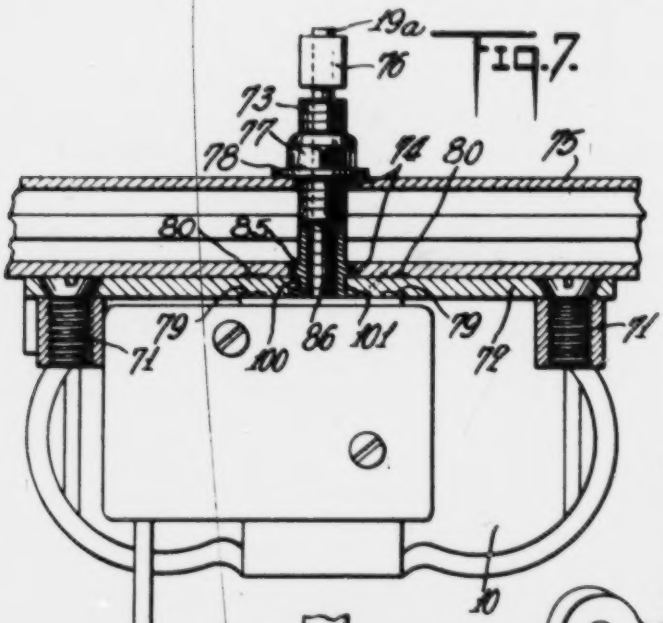

Fig. 7.

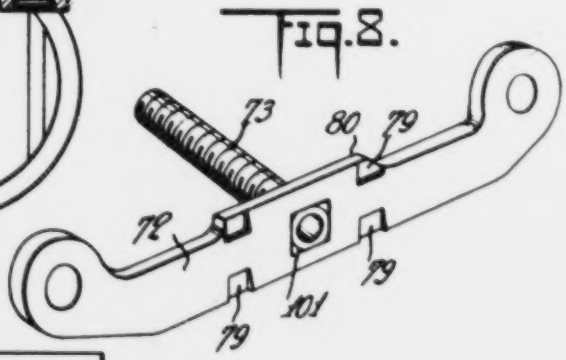

Fig. 8.

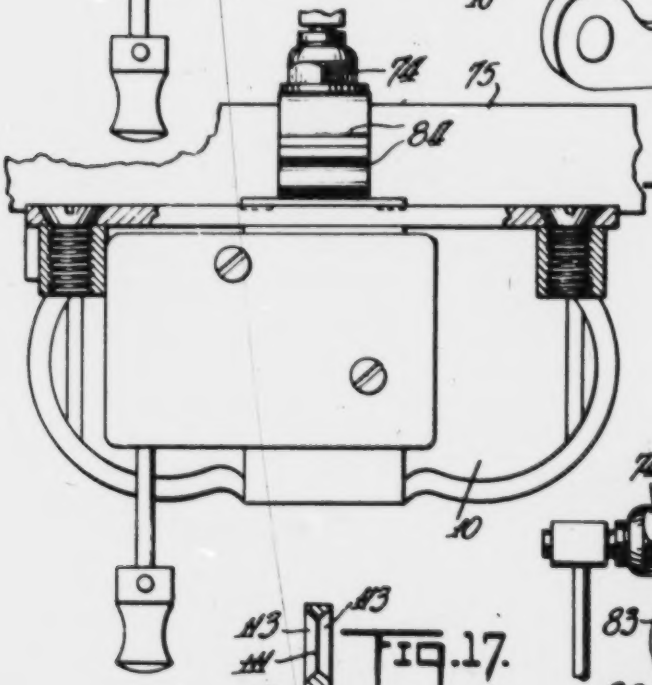

Fig. 9.

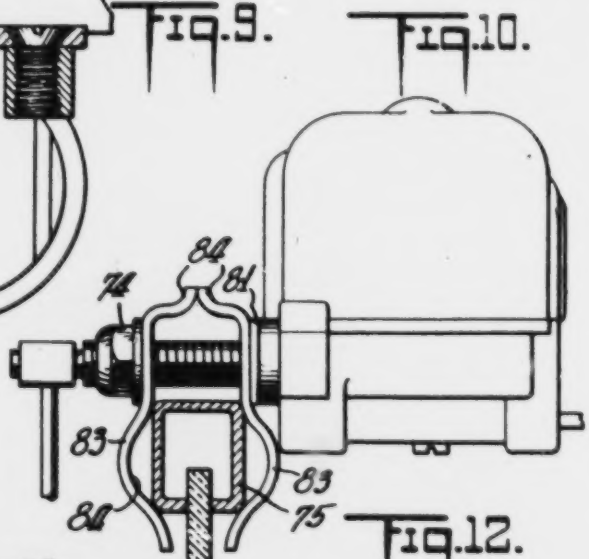

Fig. 10.

Fig. 17.

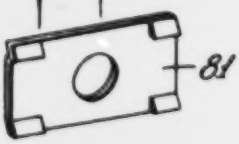

Fig. 12.

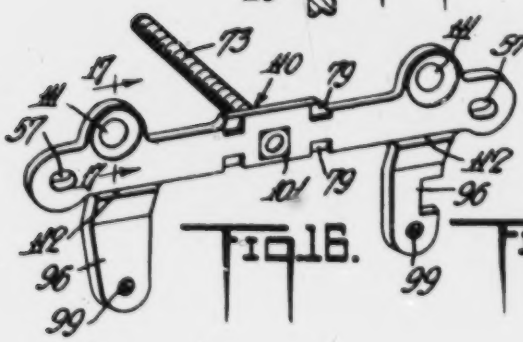

Fig. 16.

Fig. 11.

INVENTORS
Earle V. Hennecke
David Kuskin
By
Dean, Sanford, Hirsch & Foster
ATTORNEYS

Nov. 2, 1937. E. V. HENNECKE ET AL 2,097,662

UNIVERSAL MOUNTING FOR WINDSHIELD WIPER MOTORS

Original Filed Aug. 23, 1933 3 Sheets-Sheet 3

Fig. 13.

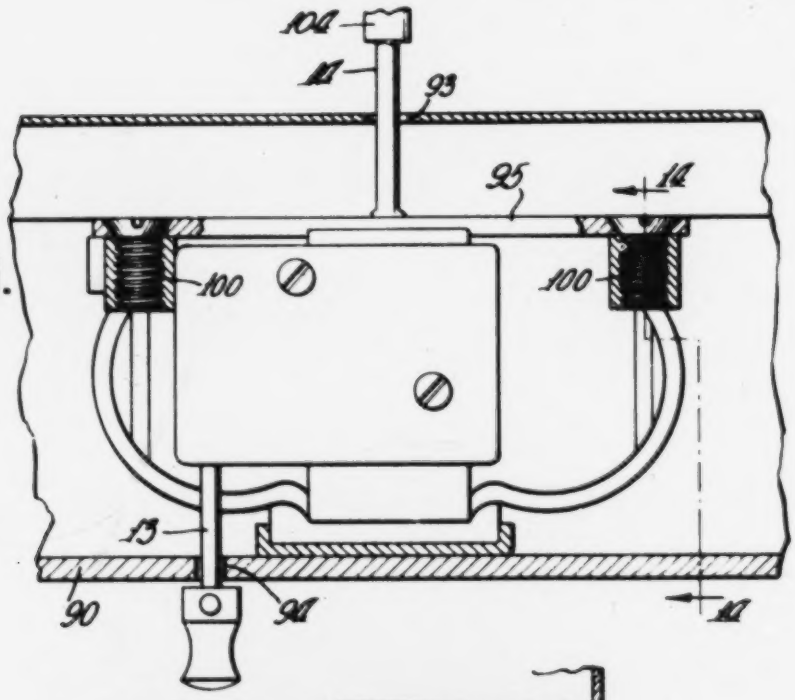

Fig. 14.

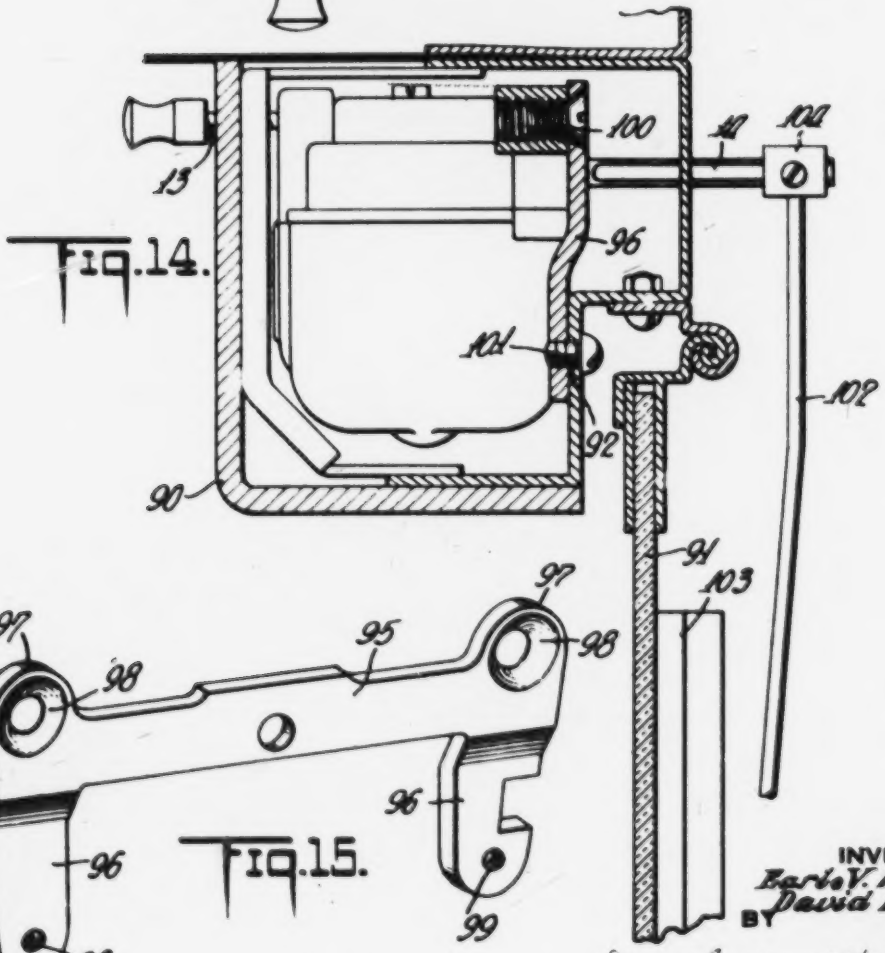

Fig. 15.

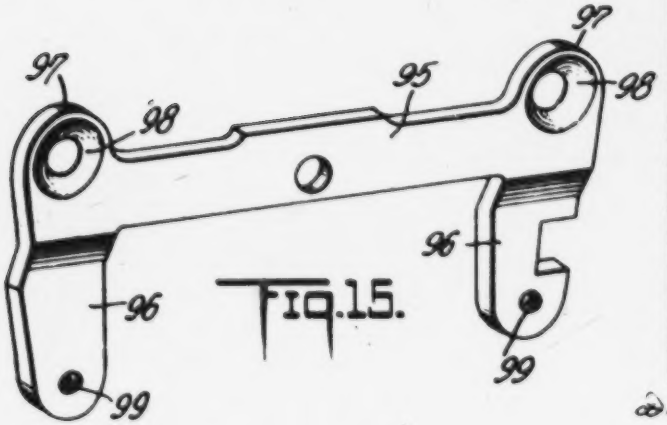

INVENTORS
Earle V. Hennecke
David Austin
BY
Dean, Sanborn & Foster
ATTORNEYS

Patented Nov. 2, 1937 2,097,662

UNITED STATES PATENT OFFICE

2,097,662

UNIVERSAL MOUNTING FOR WINDSHIELD WIPER MOTORS

Earle V. Hennecke and David Kuskin, Flushing, N. Y., assignors, by direct and mesne assignments, to Franklin J. Foster, New York, N. Y., as trustee

Application August 23, 1933, Serial No. 686,394
Renewed March 29, 1937

5 Claims. (Cl. 15—255)

Our present invention relates to means for conveniently mounting an auxiliary motor such for instance as a windshield wiper motor on or adjacent the windshield of a car.

Practically all cars and trucks are equipped at the factory with windshield wipers powered by an auxiliary motor of either of the electric or suction type, usually the latter. There has been no attempt to standardize windshields, windshield frames, header bars or other auxiliary wiper motor mounting apparatus by car manufacturers. The result has been that special types of motors and special types of mountings have been supplied to each car manufacturer. Some motors are mounted outside of the windshield, some are mounted inside of the windshield, some are concealed and some are not, the object of each manufacturer being to procure a motor and a motor mounting which will render the operating mechanism for the wiper as inconspicuous or as attractive or as cheap as possible while firmly securing it in position.

From the standpoint of the manufacturer who is turning out thousands of identical cars, such practice may be desirable but from the standpoint of the accessory dealer who is required to replace windshield wiper motors, the practice has proven highly undesirable since in order to completely supply the trade the dealer must carry in stock several score models and a complete line of wipers would involve stocking nearly two hundred different styles of motors to accommodate the trade if an exact duplicate of the worn or broken motor is to be used for replacement purposes.

Our present invention is primarily concerned with obviating this difficulty from the dealer's standpoint and with providing a motor which by means of a few simple adaptor attachments can be readily applied to nearly 100% of all of the automobiles now in use in the United States. Thus instead of stocking two hundred styles and types of motors, the dealer may stock a single standard motor and a few simple standard adaptor fixtures by which the motor may conveniently be applied to practically any make of car.

Another object of the invention is to accomplish this result while maintaining whatever standards may be set by the car manufacturers for concealed or inconspicuous motor mounts. Furthermore the cost of using our universal mounting arrangement is negligible as compared to the dealer's present costly practice of filling his shelves with dozens and dozens of motor types and still being unable to afford any proper mounting on certain types of cars.

Another object is to provide a set of adaptor fixtures, few in number, inexpensive in construction and capable of being so correlated with the motor and with the motor mounting part of the car, that expeditious and facile attachment of the motor may be readily accomplished.

Another object is to provide motor mounting means which while of simple construction, will be rugged, durable and efficient in use and which will afford a secure and if desired, a permanent mount for a windshield wiper motor.

While I prefer to apply the universal adaptor system to a light duty suction motor of the general character disclosed in Patent No. 1,912,777 issued to David Kuskin and Duncan A. McConnell on June 6, 1933, it is to be understood that similar adaptor systems might be used with various other types of suction or electric motors, notably the vane type and the piston type suction motors and the motion reversing or motor reversing types of electric motors.

Despite the great variation in the design of automobiles, if their windshield wiper motor mountings be considered independently of minute structural details of such mountings, they resolve themselves into but three types. (1) The outside motor mounting type where double support means must be provided for the motor at opposite sides of its wiper operating shaft and the shaft does not penetrate the windshield, header board or other part of the car but terminates between the motor and the outer face of the windshield or header board, and termed hereinafter for the sake of convenience, a two hole outside mount. (2) The most common type of inside motor mount wherein a single support means is provided for the center of the motor and the wiper operating shaft projects through this support means to move the wiper across the outer face of the windshield. With this type the support means is usually secured in the same opening through which the wiper driving shaft of the motor extends. It will be referred to hereinafter as a center hole mount. (3) An inside motor mount which corresponds in many particulars to the outside motor mount, that is to say, a mounting in which two anchorages or supports are afforded for the motor and the wiper operating shaft projects outwardly through the windshield frame or header board midway between the two motor anchorages. This type for descriptive convenience will be referred to hereinafter as a three hole inside mount.

Again waiving the details of such three general arrangements, it has always been considered essential to make the mounting means an integral part of the motor and to supply three separate types of motors for these three standard types of mountings. In addition to this, the mere fact that the mounting, anchoring or securing means for the motor always included parts which constituted an integral part of the motor, scores of variations of motor constructions have been resorted to, to meet the individual requirements of individual car manufacturers and individual car styles.

In accordance with the present invention we employ an adaptor system which will permit a standard motor to be quickly and conveniently and securely attached to a car using any of these three common types of motor securing, mounting or anchoring means or devices. While it is within the spirit of the invention to provide a single adaptor fixture, adapted with but minor variations to secure the motor in any of these standard mountings, we preferably employ a set of three primary adaptors, any of which may be selectively secured to the motor and conveniently anchored to or supported by the car without any alteration in the standard car construction. It will be understood that if the dealer prefers to keep the three main adaptor parts in stock rather than a single adaptor, it will not be necessary for him to stock any more adaptors than he stocks motors, but he can estimate the relative proportions of motors in use embodying the three general types of motor mountings and order his adaptors accordingly.

The convenience of such an arrangement to the tourist whose wiper is apt to break down hardly needs discussion. Suffice it to say that with this universal arrangement a tourist having a motor requiring replacement will be able to stop at even the smallest wayside dealer and procure a motor which will fit his car regardless of what type of car he may be driving and that such motor may be applied in but a few minutes.

It is within the scope of the invention to provide a single universal adaptor piece which is capable of being secured to the motor and to any motor support arrangement. In this case the main universal adaptor piece could be slightly trimmed off or unnecessary parts thereof removed if necessary or desirable before attaching the adaptor piece to the motor.

The invention may be more fully understood from the following description in connection with the accompanying drawings wherein:—

Fig. 1 is a view mainly in horizontal section taken through the header bar of a typical "General Motors" car such as a "Buick" utilizing a special type of three hole inside mount, and showing the manner in which one of the "Kuskin" type motors may be applied by a simple system of adaptors as a replacement for the type of motors used as standard equipment,

Figs. 2, 3 and 4 are perspective views of the adaptor fixtures,

Fig. 5 is a view similar to Fig. 1 but illustrating an adaptor arrangement for a typical standard two hole outside motor mount,

Fig. 6 is a front elevational view of the lower part of the motor and its adaptors taken on the line 6—6 of Fig. 5,

Fig. 7 is a sectional plan view showing the manner in which the motor may be applied to cars using a standard center hole inside mounting,

Fig. 8 is a perspective view of one member of the adaptor used with this mount,

Fig. 9 like Fig. 7 is a sectional plan view of another type of single hole mounting save that in this instance the motor shaft extends above instead of through the windshield frame and is secured partially by adaptor brackets,

Fig. 10 is a side elevational view of the motor mount shown in Fig. 9 and with the windshield and frame in section,

Fig. 11 is a perspective view of one of the brackets used in Fig. 10,

Fig. 12 is a perspective view of an auxiliary adaptor fixture used in the mounting shown in Fig. 10,

Fig. 13 is a sectional plan view showing how a motor can be mounted in concealed position within the header bar of a car, such mounting being typical of the standard "Essex" header bar construction and combining features of both the three hole and center hole inside mount,

Fig. 14 is a transverse sectional view on the line 14—14 of Fig. 13,

Fig. 15 is a perspective view of the adaptor bracket used in conjunction with this mounting,

Fig. 16 is a perspective view of a universal adaptor bar embodying all of the features of the bar shown in Figs. 6, 8 and 15, and

Fig. 17 is an enlarged transverse sectional detail on the line 17—17 of Fig. 16.

Referring first to Figs. 1 to 4 of the drawings, I have illustrated a standard windshield wiper motor of the general type illustrated in Patent No. 1,912,777 in greater detail in copending application of David Kuskin, Serial No. 671,969, filed May 20, 1933.

For purpose of the present disclosure it is sufficient to note that the motor includes a base casting 10 which mounts the parking mechanism on its under face, this parking mechanism being concealed by the dust cover 11 and including as an actuating element, a slide member indicated at 12 and at either end of which a handle 13 may be secured, this handle being push-pull control which regulates the main suction admitting valve. The motor mechanism itself is arranged upon or above the casting and is concealed by a dust cover 14 (Fig. 6).

The hollow header board construction illustrated in Fig. 1 is typical of the arrangement used in many "Buicks", "Chevrolets" and other types of "General Motors" cars where the motor has a variation of the "three hole inside mount" and drives either a single wiper or tandem wipers. The member which translates motion from our motor directly or indirectly to a wiper blade consists of a shaft 16c projecting laterally from one side of the casting. This shaft is oscillated by the motor and when the dealer receives it the shaft is quite long and is cut off by the dealer to the desired length in accordance with the particular type of car upon which the motor is to be mounted. Similarly the handle member 13 which is used for starting and stopping the motor is originally of excess length and is preferably of bendable metal so that it may either be cut off or in some instances bent into position for engagement by a supplemental actuating handle 69 (Fig. 5). Where said supplemental handles are used, the end of the member 13 is preferably provided with an eye 68 or some equivalent device for engagement attaching said handle.

The casting presents a pair of spaced ears 15 having internally threaded apertures 15a therein.

In some cases the holes need not extend entirely through the ears but threaded sockets are provided in lieu of the threaded apertures. These ears or sockets 15 constitute in every case the means by which the adaptor fixtures are secured to the motor.

In accordance with standard practice the hollow header bar 10 (Fig. 1) has secured thereunder a U-shaped bracket 17 and slidably mounted within this bracket is a push-pull bar 18, the ends of which are adapted to actuate one or two reciprocating or oscillating windshield wipers (not shown). Also mounted within the bracket and having one end accessible from the interior of the car is a transverse shaft 19 operating the push-pull bar 18 through the medium of a rocker arm 20 fixed upon the shaft 19 and pivotally connected to bar 18 as at 21. The inner plate or bar 22 of the header board is provided with a pair of openings 23 extending therethrough with a center opening 24 through which one end of the shaft 19 projects and a fourth opening 25 through which projects a nipple 26 connected interiorly of the header bar with a suction tube or pipe 27 and adapted to be externally connected with the main suction port 28. In the case of the particular type of motor here under discussion, the suction connection is made through an upstanding nipple 26 which lies closely adjacent to the dust cover 14 (Fig. 6).

With the exception of the motor the mechanism as thus far described, constitutes substantially the standard construction of the header board of this type of car. The use of a few simple adaptor fixtures permits the motor to be readily attached to the car as a replacement or as standard equipment.

In order to couple the shaft 19a to the shaft 19, we employ the adaptor illustrated in perspective in Fig. 4 and designated generally at 30. This adaptor includes a cylindrical portion 31 having a socket 32 therein adapted to be slipped over the shaft 19a and secured in place by set screw 33 working through the wall of the socket and preferably against a flat face 34 on the shaft 19a. Beyond the cylindrical socket portion 31, the adaptor 30 is externally tapered as at 35, this taper terminating in a squared extension 36 adapted to fit within the squared bifurcated end 37 of the shaft 19 and afford a keying and clutching connection between the shaft 19 and shaft 19a. The further reduced terminal end 38 of the adaptor 30 fits a socket 37a formed in the shaft 19 inwardly beyond the furcations 37.

A short length of flexible hose 39 bridges the space between the nipple 26 on the casting and the downwardly turned end of the nipple 26 which is attached to the car, such downwardly turned end being indicated in dotted lines at 40.

For supporting the motor casting and its associated parts we employ adaptor sockets 41 of the character shown in Fig. 3. The members 41 are externally cylindrical including reduced portions 42 defining annular external shoulders 43. Portions 42 are thrust home into the sockets 15 to an extent limited by the abutment of the shoulders 43 against the ends of the ears 15. Relatively long stud screws 44 extend outwardly through intermediate portions of the bracket 17 and through the apertures 23. Outward movement of the screws is limited by the engagement of their heads 45 with the intermediate portion of the channel plate 17 and the terminal ends of the screws screw into the internally threaded bores 46 of the adaptors 41. In order to limit the extent to which the stud screws may work into the adaptors 42, I employ spacer sleeves 47. These sleeves are preferably of an external diameter corresponding to the diameter of the ears 15. They each have a passage extending throughout their length which at one end is reduced as at 48 to correspond approximately in size with the shanks of the screws 44. These sleeves 47 extend through the openings 23 with one end abutting the bracket 17 and with the other end abutting the ears 15.

Inasmuch as this motor is mounted interiorly of the car, only a short handle member 13 need be provided for manual manipulation by the operator of the car. From the foregoing description it will be apparent that the problem of mounting one of the standard wipers herein illustrated in a car constructed in the manner illustrated in Fig. 1 may be expeditiously and easily accomplished and that when the motor mount has been effected, the motor will be firmly attached to the header board and the drive shaft will be effectively clutched to the shaft 19 which indirectly actuates the wiper actuating rod 18, the latter in turn oscillating or reciprocating a pair of tandem wipers (not shown) arranged beyond opposite ends of the wipers.

In Figs. 5 and 6 we have illustrated one of the standard wipers using a "two hole outside mount" secured by a simple adaptor mechanism to outside of header bar or the windshield frame. In this instance the motor is mounted outside of the windshield and the shaft end 19a extends inwardly from the motor toward the windshield terminating between the casting 16 and the windshield and the wiper blade (not shown) is carried directly by a suitable carrier member 50 fixed upon the end of the shaft 19a.

In this form of mounting a pair of screws 51 are used to attach an elongated flat stamped bar 52 upon the edge of the casting adjacent the windshield. The bar 52 is shaped to afford an opening or cut out 53 for the projecting control handle 54. It is also centrally apertured at 55 so that the shaft 19a may pass through it.

Preferably the openings in the bar through which the screws 51 pass are tapered at 56 to receive the screw heads and laterally beyond the opening which receive the screws, the extended ends of the bars are provided with apertures 57 therein adapted to receive bolts 58 for attaching the casting with its adaptor bar 52 to the windshield frame. This frame 59 is of tubular construction. It is provided with diametrically opposite apertures 60 through which the bolts 58 pass. Nuts 61 screwed onto the ends of the bolts press washers 62 against the apertured ends 57 of the bar 52, that is, the nuts are tightened to an extent limited by spacer sleeves 63 interposed between the ends of the adaptor bar and the frame 59.

Sleeves 63 are similar in construction to the sleeves 47 illustrated in Fig. 1 and may be of any desired length in accordance with the spacing required between the motor and the windshield. Such spacing must of course in any event be adequate to accommodate the shaft 14 which projects toward the windshield and carries the wiper arm.

In Fig. 6 there is disclosed a dust plate 64 pivotally secured as at 65 adjacent the opening 66 in the front of the casting through which the handle member for operating the parking device extends. Since this handle may be applied from

either side of the casting, the dust plate on the side opposite the handle is normally swung to closed position to block the entry of dirt and dust under the dust cover 11. Fig. 5 also illustrates the manner in which a supplemental handle device may be employed in conjunction with the parking control mechanism. Here a short handle 64 having an eye 68 screws into the slide 12. The exact alignment of this handle with the handle 69 in the windshield frame is rendered unnecessary by making the eye of relatively large size and drilling a hole in the frame through which the supplemental handle 69 projects, said handle having a bent end which engages in the eye 68. It will be observed from Figs. 5 and 6 that the knob 70 with the handle 69 is disposed within the car so that the driver may have convenient access to it when starting or stopping the wiper actuating motor.

It will be readily apparent that the spacer sleeves 47 and 53 might be supplied in any length desired or that long sleeves might be shortened or that the sleeves might all be made of maximum length and transversely severed by the dealer to shorten them when shorter sleeves are required. The walls of these sleeves which encircle the enlarged portions of their bores are quite thin. Furthermore, the sleeves themselves are preferably made of some soft metal so that they could be quickly cut through with a hacksaw if desired. It will be apparent that Fig. 5, like Fig. 1, illustrates an adaptor structure including parts to be anchored to the ears 15 and parts secured by the anchored element for attaching the motor at or adjacent the frame of the windshield.

Figs. 7 and 8 show an extremely simple adaptor arrangement to be used where the motor is mounted inside of the car and only a center hole mount for the motor is required. With this form of the invention, screws 71 corresponding to screws 51 of Fig. 5, serve to secure a flat, elongated adaptor bar 72 to the edge of the casting 10. The adaptor bar in this instance carries at its center a laterally projecting hollow externally threaded sleeve 73. This sleeve is adapted to pass through aligned apertures 74 in the windshield frame 75. The shaft 19a extends through the sleeve 73 and outwardly beyond the sleeve mounts the wiper arm carrier 76. In order to clamp the adaptor bar 72 which is rigid with the casting, against the inside of the windshield frame it is merely necessary to screw a nut 77 onto the projecting end of the sleeve 73, a plate or washer 78 being preferably interposed between the nut and the outer face of the frame 75.

It will be observed that the adaptor bar near the center thereof is punched at a plurality of points to provide projections 80 on one face of the bar and corresponding recesses 79 at the other face of the bar. In Fig. 8 I have shown four of these punched out portions arranged in generally rectangular formation so that projecting portions may bite into the windshield frame and check any tendency for the motor to turn about its center hole mounting.

Here again the adaptor structure includes a device attached to the cars 15 and means associated with such device for securing the motor structure to the frame. Many methods might be employed for attaching the sleeve 73 to the adaptor bar 72. By observing the cross sectional shape of the center hole in the adaptor bar in Fig. 9 together with the showing of Fig. 10, it will be seen that the adaptor bar has an opening therethrough which is of increased diameter near one face of the bar. This increase in diameter may be effected by making the hole conical or by forming an enlargement in one end thereof. In either event the end of the sleeve 73 is spun over into interlocked relationship with the shoulder thus formed so that it is restrained against outward movement. With the adaptor bar in place of course, the casting itself blocks axial movement of the sleeve in the opposite direction. An advantage of having an enlarged opening of irregular shape is the fact that when the sleeve is spun or pressed out into engagement with the bar, it will be positively blocked against rotary as well as endwise movement in no one direction. In order to prevent disassembly of the sleeve and adaptor bar 72, it should be noted that a shoulder 85 defined by the reduced end of the sleeve abuts the outer face of the bar 72 to prevent the sleeve from being pushed all of the way through the bar in the opposite endwise direction.

The sleeve is of internal diameter exceeding the external diameter of the shaft and there is no danger of the shaft coming into contact with the interior of the sleeve due to the rigid mounting of the sleeve carrying bar 72 with respect to the casting 10 which in turn is fixed with respect to the oscillating shaft 14.

Figs. 9 to 12 inclusive show an adaptor mechanism which is in all respects identical with that of Fig. 7 save that the threaded sleeve 73 instead of extending through a hole in the windshield frame, extends above the windshield frame and passes through openings 82 in a pair of identical complementary bracket members 83 which embrace opposite sides of the frame bar 75 and have their upper ends 84 pressed tightly together as an incident of tightening the nut 77. The lower portion of the brackets may be shaped identically with the cross section of the windshield wiper bar or may, as shown in the illustrated embodiment of the invention, be bent to define opposed concave surfaces 84 which will accommodate practically any type of windshield frame bar.

It will be understood of course that the brackets 83 may be made of various shapes in order to snugly grip windshield frames of special cross sectional shapes. However the brackets which are illustrated here will in most instances afford an adequately effective gripping action.

Rectangular spacer plates 81, one of which is shown in perspective in Fig. 11 may be used between the innermost bracket and the adaptor bar 72 to space the motor inwardly far enough to clear the bulge in the bracket. Since the punched out and recessed portions of these plates correspond exactly to the punched out and recessed portions of the bar 72, one or more of the plates may be interposed between the adaptor bar 72 and the windshield frame 75 and nest snugly with each other and the adaptor bar. No matter how many plates are introduced, they are always interlocked with each other and through the bar 72 with the motor in such fashion that there can be no independent rotation of the plates. One of the plates or if no plates are used, the adaptor bar itself affords a relatively substantial bearing surface against the inside of the windshield frame to prevent localized deformation of the latter when the nut 77 is screwed tightly home.

The sleeve 73 may be severed at any point along this length to expose the end of the shaft 14, in accordance with the particular thickness of the windshield frame upon which the device is mounted.

Center hole mountings of the type illustrated in

Figs. 7 and 10 are typical of the method by which windshield wiper motors are secured to closed and open "Ford" cars.

Similarly with the type of mounting illustrated in Fig. 6 the best operation is obtained by spacing the shaft end a very definite distance from the windshield. With this form of the invention the shaft end is somewhat longer than the short shaft of Fig. 1 and the second saw guide mark shows exactly where the shaft would be cut when the motor is to be mounted as disclosed in Fig. 6 and by the use of the adaptors of Fig. 6.

In Figs. 13 to 15 we have shown another extremely simple type of adaptor construction designed to meet the similar peculiar requirements of standard "Essex" cars. With this type of mounting, the motor itself is completely concealed within the hollow header bar of cross bar 90 which is disposed within the car, adjacent and above the windshield 91. The problem here is to devise a set of adaptors which will permit the motor to be mounted in the restricted space afforded by the header bar design and without the need for providing any apertures other than those which are standard with this type of construction.

The lower portion of the hollow header piece is somewhat narrower than the upper portion and is set back from the windshield and it is ordinarily provided with a pair of openings 92 in its front face through which securing screws for a wiper motor are adapted to pass. Another aperture 93 is customarily provided in the front wall of the header piece above the windshield and through this opening the oscillating wiper shaft is adapted to project. A fourth opening 94 arranged near the top of the rear wall of the hollow header piece is adapted to provide clearance for movement of the control handle. This is another modification of the three hole inside mount.

The adaptor which we use includes a flat transverse bar illustrated in perspective in Fig. 15 and designated by the numeral 95. The ends of this bar are integrally connected with a pair of parallel leg portions 96, these legs extending slightly above the bar and a considerable distance below it. In the upper generally circular leg extensions 97 we provide counter sunk openings 98 and in the lower extremities of the legs we provide threaded apertures 99.

Screws 100 corresponding to the screws 71 of Fig. 9 and the screws 51 of Fig. 6 serve to attach the adaptor bar 95 to the motor, such screws passing through the openings 98 into the sockets 15 and having their heads accommodated in the countersinks of openings 98. The lower ends of the legs of the adaptor are then attached to the hollow header piece by screws 101 which are passed through apertures 92 and screwed into the apertures 99, thus rigidly supporting the motor structure in inverted position.

With the motor in this position the shaft 14 projects outwardly through the opening 93 and the arm 102 for the squilgee 103 may be attached to the projecting end of the shaft 14 in any convenient or conventional manner as for instance by the coupling 104. A control handle 13 corresponding to that of Fig. 1, passes through the opening 94.

From the foregoing it will be apparent that by the use of a single adaptor bracket and a couple of screws, the motor may be conveniently secured in concealed position within the header member without making any alterations in the header member itself.

We have referred to the handle 13 and corresponding elements throughout the specification as controlling a starting valve. With the particular type of motor illustrated in the pending application of Kuskin, above identified, such handle also controls the parking of the wiper blade as fully disclosed in application Serial No. 671,980 above identified but only as an incident of operation of the main control valve of the motor.

A careful analysis of the various types of mountings illustrated herein will disclose that in every instance the mounting means includes an adaptor secured directly to the motor casting and means for in turn securing the adaptor structure itself to the particular part of the car from which the motor is to be supported. In every instance the adaptor structure consists essentially of two elements which are attached or rigidly held with respect to each other, either integrally or separately and with one of those elements removably secured to the motor and the other of the elements removably secured to the car

As suggested in the preamble to the specification, the purchase of a few of these simple adaptor forms will permit a dealer to apply a new windshield wiper motor to practically any standard type of car construction and without in any event necessitating the alteration of the car itself. In no instance is it even necessary to drill a special hole or in any way alter the standard construction of the car itself. From the standpoint of the dealer, a motor mechanism which is universally adapted for convenient application to practically any type of car, will entirely eliminate the need for stocking tremendous numbers of different types of motors and the cost of the adaptors themselves is but negligible as compared to the expense involved in purchasing and installing large stocks of wipers of many different styles upon which the dealer in most cases makes a very slow turn-over.

Referring to the adaptor shown in Fig. 16 it will be noted that it embodies in composite form, all of the structure of the adaptor of Figs. 6, 8 and 15. That is to say, this universal adaptor designated generally at 110, embodies legs 96 of the adaptor shown in Fig. 15 together with their screw holes 99. It also embodies the screw 73 shown in the adaptor of Fig. 8 and likewise the notches 78 shown in that figure. It furthermore embodies the projecting portions with their apertures 57 as illustrated in the adaptor of Fig. 6 and also mounting holes for mounting it on the casting. These holes are designated at 111 and they occupy the identical same position as the mounting openings of Figs. 6, 8 and 15. In connection with this universal adaptor it will be noted that the mounting holes of Fig. 5 are countersunk as at 56 from one face of the adaptor bar and the mounting holes of Fig. 15 are countersunk from the opposite face. With the universal adaptor bar of Fig. 16 we countersink both faces of the mounting hole as indicated at 113 (Fig. 17) thereby permitting countersinking or partial countersinking of the head of the screw regardless of which way the screw extends through the mounting openings 111.

The only portions of this universal adaptor which may prove unsightly with certain types of mounting are the legs 96 and preferably these legs are notched or weakened as indicated at 112. These notches appear at the point of juncture between the legs and the main adaptor bar

and when the legs do not form a necessary part of the mounting they may be broken off by simply bending them back and forth.

Of course in addition to the desirability in some instances of breaking off the legs, it will frequently prove necessary to remove the screw 13. This screw may be conveniently removed by grasping it with a pair of pliers and pulling it out of its mounting hole, the metal of the hollow screw being soft enough so that the screw may be readily withdrawn. It will be understood of course that this metal, when the adaptor is in actual use, carries no substantial strain and there is no danger of inadvertently dislodging the screw if the universal adaptor of Fig. 16 is to form part of a center hole mount.

It will thus be seen that there is herein described apparatus in which the several features of this invention are embodied, and which apparatus in its action attains the various objects of the invention and is well suited to meet the requirements of practical use.

As many changes could be made in the above construction, and many apparently widely different embodiments of this invention could be made without departing from the scope thereof, it is intended that all matter contained in the above description or shown in the accompanying drawings shall be interpreted as illustrative and not in a limiting sense.

Having thus described our invention, what we claim as new and desire to secure by Letters Patent is:—

1. The combination with a windshield wiper motor including a pair of spaced hollow members to receive adaptor devices and including a driven shaft projecting from the motor between said members, of adaptor devices for securing said motor in operative position on or adjacent interiorly or exteriorly of the windshield frame or other mounting member, which affords either a single hole mount or a double hole mount, said adaptor devices including adaptor means to pass through the mounting hole or holes of the windshield frame or other mounting member and complementary adaptor means comprising a flat bar lying against the motor rigidly connected to said first adaptor means and to the spaced hollow members of the motor, said bar bridging the space between said hollow members and cut away to afford clearance for said shaft.

2. The combination with a windshield wiper motor having a pair of spaced internally threaded members adapted to receive mounting parts, of adaptor means for securing said motor upon a car adjacent the windshield thereof, said adaptor means including a bar, means engageable with the threaded members and bar for holding the bar and motor together, means associated with the bar for anchorage on or adjacent the windshield frame, the intermediate part of said bar having portions punched out to afford notches in one face of the bar and projections on another face of the bar to a correspondingly notched spacer plate adapted for nesting with the notches or projections of the bar and space the motor at the desired distance from the windshield.

3. The combination with a windshield wiper motor including a wiper actuating shaft and a pair of spaced internally threaded members adapted to receive mounting parts and disposed at opposite sides of said shaft, of adaptor means for securing said motor upon a car adjacent the windshield thereof, said adaptor means including a bar, means engageable with the threaded members and bar for holding the bar in position with respect to the motor, means associated with the bar for anchorage on or adjacent the windshield frame and including a pair of brackets adapted to embrace the windshield frame, said brackets including upwardly projecting portions having aligned apertures therein through which the wiper actuating shaft projects, an externally threaded sleeve fixed to the bar encircling the shaft and passing through the aligned apertures in the brackets and a nut engaging said sleeve for clamping the brackets on the windshield frame.

4. The combination with a windshield wiper motor including a pair of spaced hollow members to receive mounting fixtures and including a driven shaft projecting from the motor between said mounting fixtures, adaptor means for securing the motor in operative position on or adjacent to a windshield frame, said means including an adaptor bar, screws attaching the adaptor bar to the openings, a hollow externally threaded screw fixed to the bar encircling the shaft and adapted to pass through an opening in or adjacent the windshield frame, and of less length than the shaft, a nut for securing the screw in position, spacer means adapted for interposition between the bar and the windshield frame, said spacer means and said bar having nesting projections and recesses to prevent turning of the spacer with respect to the bar.

5. The combination with a windshield wiper motor including a pair of spaced hollow members to receive mounting fixtures and including a driven shaft projecting from the motor between said mounting fixtures, of a motor supporting adaptor bar, screws entering the hollow members and securing the adaptor bar to the motor, means for securing the adaptor bar in operative position on or adjacent a windshield frame, a concealed starting valve for the motor, said motor having openings therein at opposite sides thereof through which a valve handle is adapted to be selectively attached to the valve, said adaptor bar being cut away to expose the openings through which said handle is attached.

EARLE V. HENNECKE.
DAVID KUSKIN.

May 9, 1939. E. N. JACOBI 2,157,666

FLYWHEEL MAGNETO ASSEMBLY FOR INTERNAL COMBUSTION ENGINES

Filed Sept. 16, 1936 2 Sheets-Sheet 1

Fig. 1.

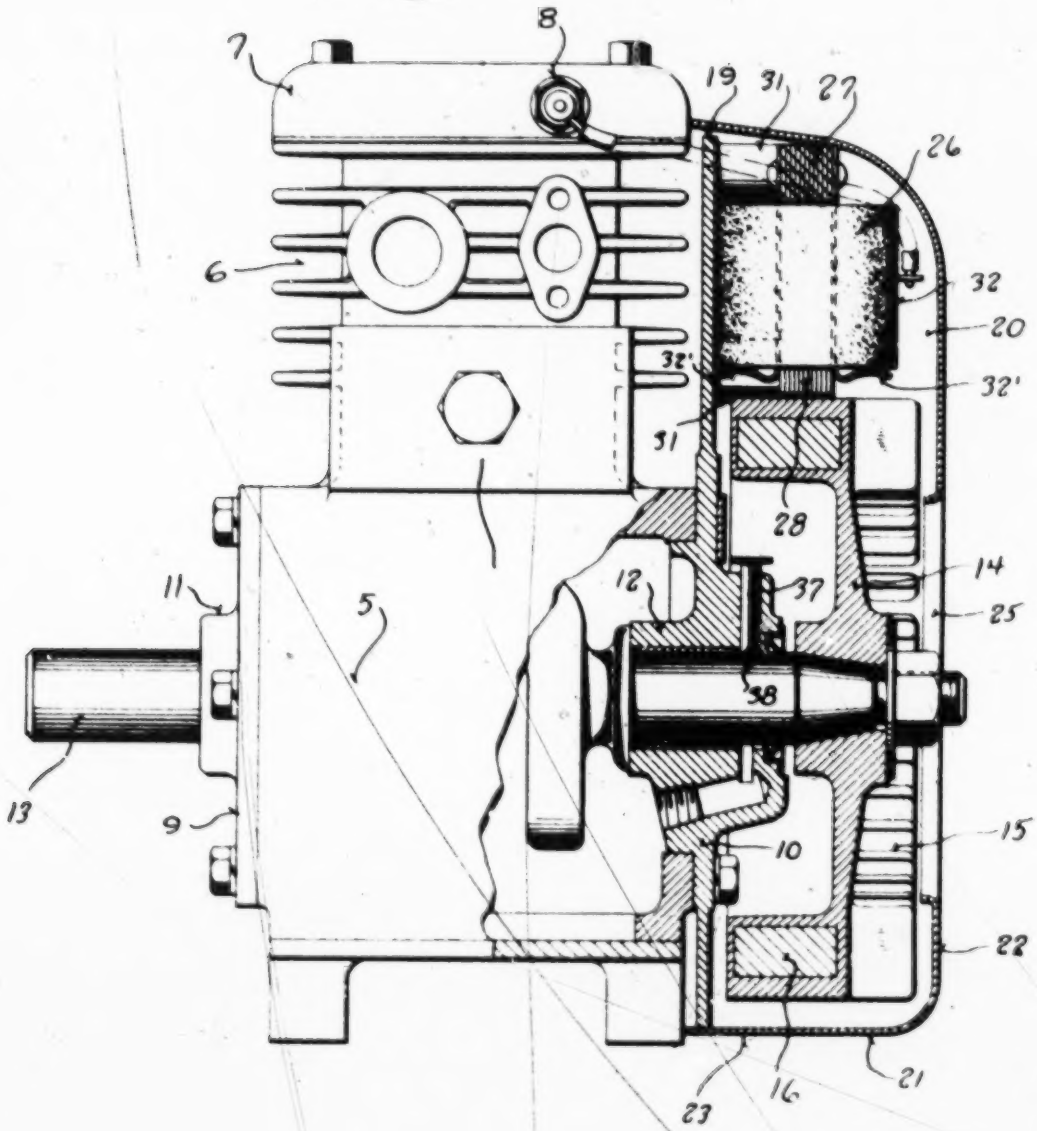

Inventor
Edward N. Jacobi
By Ira Milton Jones
Attorney

May 9, 1939. E N. JACOBI 2,157,666

FLYWHEEL MAGNETO ASSEMBLY FOR INTERNAL COMBUSTION ENGINE

Filed Sept 16 1936 2 Sheets-Sheet 1

Fig. 2.

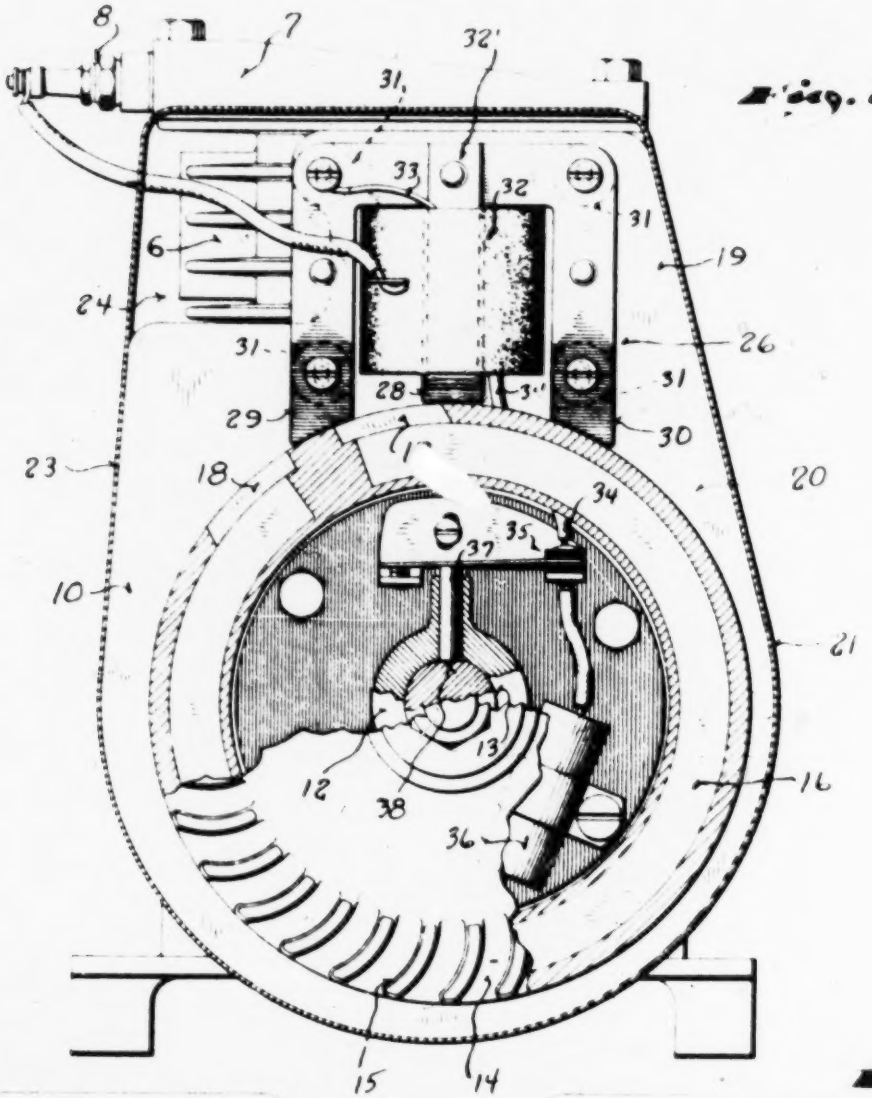

Fig. 3.

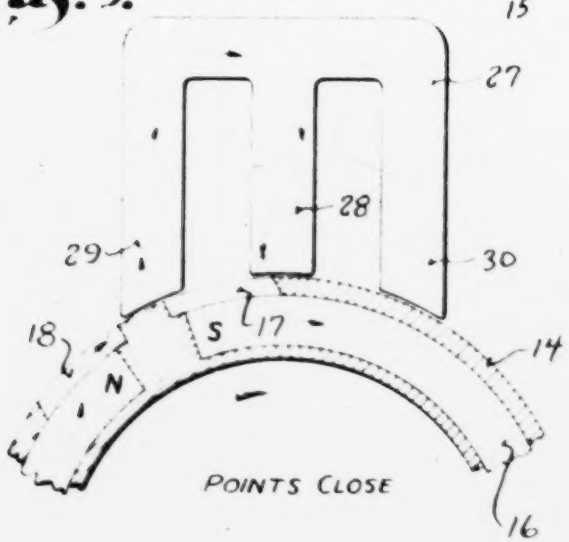

Fig. 4.

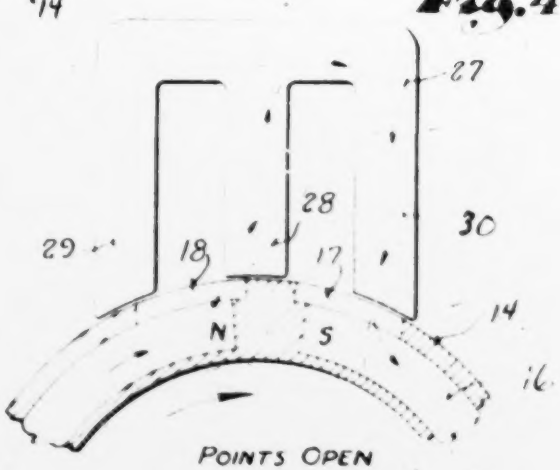

Inventor
Edward N. Jacobi
By Dean Hulbert & Jones
Attorney

Patented May 9, 1939

2,157,666

UNITED STATES PATENT OFFICE

2,157,666

FLYWHEEL MAGNETO ASSEMBLY FOR INTERNAL COMBUSTION ENGINES

Edward N. Jacobi, Milwaukee, Wis., assignor to Briggs & Stratton Corporation, Milwaukee, Wis., a corporation of Delaware

REISSUED

DEC 3 1 1940

Application September 16, 1936, Serial No. 101,125

2 Claims. (Cl. 123—149)

This invention relates to improvements in internal combustion engines and refers particularly to the magneto assemblies therefor.

It is an object of this invention to provide an improved magneto of the fly-wheel type whereby the size of the fly-wheel carried ring magnet may be proportioned to the magnetic requirements without regard for other factors.

It is another object of this invention to provide a magneto assembly of the fly-wheel type in which the coil and its armature core are mounted wholly outside the fly-wheel.

Another object of this invention is to provide a magneto assembly of the character described in which the coil and its core are so located as to be cooled by the air flow induced by the fly-wheel impeller so that efficient heat dissipation is obtained with a minimum use of copper and iron.

It is also an object of this invention to provide a magneto assembly which so disposes its ignition coil that the lead to the spark plug is exceptionally short.

Another object of this invention is to provide a magneto assembly wherein a quick reversal is obtained in the direction of flux flowing through the armature core upon which the coil is mounted.

More specifically, it is an object of this invention to provide a magneto assembly wherein a three legged armature core is employed whose dimensions are such with respect to the poles of the ring magnet as to insure a very rapid change in the direction of flux flowing in the center leg upon which the coil is mounted.

With the above and other objects in view which will appear as the description proceeds, this invention resides in the novel construction, combination and arrangement of parts substantially as hereinafter described and more particularly defined by the appended claims, it being understood that such changes in the precise embodiment of the herein disclosed invention may be made as come within the scope of the claims.

The accompanying drawings illustrate a complete example of the physical embodiment of the invention constructed according to the best mode so far devised for the practical application of the principles thereof, and in which:

Figure 1 is a side view of an internal combustion engine with parts broken away and in section showing this invention;

Figure 2 is an end view of the engine with parts broken away and in section; and

Figures 3 and 4 are detail views showing the manner in which the direction of flux is abruptly changed.

Referring now particularly to the accompanying drawings, in which like numerals indicate like parts throughout the several views, the numeral 5 designates the crank case of a small portable combustion engine upon which a cylinder 6 is mounted. Ordinarily, the cylinder and the crank case are cast in one unit. The top of the cylinder is closed by a cylinder head 7 in which a spark plug 8 is secured. One end of the crank case is closed by a plate 9 and its opposite end is closed by a mounting plate 10. The plates 9 and 10 have crank shaft bearings 11 and 12, respectively, in which the crank shaft 13 of the engine is journaled.

Outwardly of the mounting plate 10 the crank shaft mounts a fly-wheel 14, on the outer face of which is an air impeller 15 to induce a flow of cooling air as hereinafter more fully described. Imbedded in the fly-wheel is a permanent ring magnet 16 having pole pieces 17 and 18 spaced apart a short distance and exposed at the outer periphery of the wheel.

The lower portion of the mounting plate is circular and substantially co-extensive in size with the fly-wheel. Its upper portion is extended tangentially to provide an extension 19 alongside the cylinder 6 and reaching up to the head 7.

The mounting plate with its upward extension 19 forms the inner wall of a blower housing and air guide 20, the other walls of which are formed by a stamped metal hood 21 which has a flat outer wall 22 of a size and shape roughly co-extensive with that of the mounting plate, and integral side walls 23 which extend inwardly to engage the peripheral edge of the mounting plate at all portions except one upper corner. This corner of the plate is cut away as at 24 to define an outlet for the cooling air induced to flow through the housing by the impeller 15. The opening 24 is so located that the air issuing therefrom impinges the cylinder 6.

An inlet opening 25 to the blower housing and air guide 20 is formed in the outer wall 22 opposite the center of the air impeller 15. Consequently, air is drawn in through the opening 25 and blown out through the opening 24.

In the space within the housing 20 above the fly-wheel and alongside the outlet opening 24 so as to be located in the direct path of the cooling air is a magneto assembly indicated gen-

erally by the numeral 26. The assembly 26 comprises a three legged armature core 27 having a center leg 28 and side legs 29 and 30. The core, as is customary, is preferably laminated and is mounted by posts 31 on the outer face of the mounting plate extension 19 in a position with the lower curved end faces of its three legs 28, 29, and 30 lying in an arc concentric to and slightly spaced from the outer periphery of the fly-wheel. Consequently, the pole pieces 17 and 18 successively sweep past the legs 29, 28, and 30 to induce a magnetic flux which is abruptly and rapidly reversed in direction through the center leg 28.

Mounted on the center leg is a conventional induction coil 32 having a primary and secondary. The coil is slipped onto the center leg 28 where it is held by spring retaining member 32'. Inasmuch as the three legs of the core are parallel and lie sufficiently close together so as to obviate the necessity for inwardly projecting horns on the outer legs 29 and 30, assembly of the coil core onto the core is a simple matter as it slides freely onto and off of the center leg.

To obtain correct air gaps between the magnet poles 18 and 17 and the coil core poles 28, 29, and 30, it is only necessary to slide the coil core downward against feeler gauges held between the coil core poles and the flywheel periphery, and with the coil core held in this manner tighten its fastening screws.

One end of the primary and seconary of the coil is grounded as at 33. The other end of the secondary is connected through the customary high tension lead with the spark plug; and the other end of the primary is connected through a conductor 34 with an insulated terminal 35 of a circuit breaker. The other terminal of the circuit breaker is grounded and is also connected to a condenser 36 in the customary manner. The circuit breaker is adapted to be actuated by a pusher pin 37, which rides on the crank shaft in line with a flattened portion 38 so that the pin is permitted to descend and allow closure of the circuit breaker once each revolution.

It is to be observed that all of the instrumentalities of the magneto are mounted on the outer face of the mounting plate where they are readily accessible, especially the coil and its armature core. It is also to be noted that this disposition of the coil and its core locates the same at a substantial elevation above the base where it is more likely to be clean and free from oil, and being mounted outside the flywheel and in position to be impinged by the cooling air, adequate heat dissipation is obtained with a minimum use of copper and iron.

In this respect it is to be observed that the coil and its core are so mounted on the plate 19 as to lie alongside or adjacent to the side of the main air stream issuing from the blower and passing to the outlet opening 24. One side of the coil core thus forms a guide or wall extending along one side of the main air stream so as to be cooled directly thereby. It is also to be observed that the curved bottom wall and tangential side wall of the blower housing, together with the coil defines substantially a scroll casing for the centrifugal impeller, and while the main air stream flows through this casing between the coil core and adjacent side wall of the housing to issue from the opening 24 and directly impinge the valves which are at the hottest portion of the engine, other lesser air streams flow through and over the coil and also past the other side of the coil core to impinge the cylinder head.

Moreover, being mounted near the top of the mounting plate near the cylinder head, the high tension lead to the spark plug may be exceptionally short.

Another advantage of the present construction resides in the fact that the mounting plates besides carrying the magneto assembly also forms one wall of the blower housing air guide, thus reducing the number of parts; and with the coil and its core mounted outside the fly-wheel, the size of the ring magnet can be proportioned to the magnetic requirements without regard for the necessity of enclosing a bulky coil. This permits making the flywheel smaller in diameter and in turn allows the engine to be built much lower than in past constructions, as the fly-wheel when proportioned to the requirements of the length of the magnet bar needed for permanence is much smaller and much more economical of the material both in the magnet and in fly-wheel proper than in a construction where the size of the flywheel is determined by mechanism which it must enclose. Also, of particular importance is the fact that a three legged armature core is employed, for through its use a more efficient magnetic machine is obtained.

As will be readily apparent particularly from Figures 3 and 4, the flux through the center leg 28 reverses abruptly and rapidly as the pole pieces 17 and 18 sweep past the pole faces of the three legs. Being close together and mounted exteriorly of the fly-wheel adjacent to its periphery, the three legs of the armature core are swept by the magnet poles in a small annular movement to thus further assure rapidity in the change in direction of the magnetic flux through the center leg 28 and consequently the coil.

In this respect, attention is directed to the fact that the arcuate length of the two magnet pole pieces 17 and 18 is sufficient to span the distance between adjacent legs of the armature core and that the space between the pole pieces 17 and 18 is less than or at least not greater than the arcuate length of the pole face of the center leg 28. This dimensional relationship is responsible for the exceptional rapidity of the change in direction of flux for as will be readily apparent from Figures 3 and 4, the flux flowing in one direction (Figure 3) hangs on and continues to flow in this direction until the very instant that the flux begins to flow in the opposite direction (Figure 4).

From the foregoing description taken in connection with the accompanying drawings, it will be readily apparent to those skilled in the art, that this invention provides an exceptionally compact and magnetically efficient magneto assembly for small portable internal combustion engines.

What I claim as my invention is:

1. In a magneto assembly for an internal combustion engine having a crankcase, a crankshaft and a cylinder mounted on the crankcase, a plate closing one side of the crankcase and having a part projecting alongside the cylinder, a bearing on the plate for the crankshaft, magneto parts carried by the plate adjacent to the bearing, a hollow flywheel mounted on the crankshaft and cooperating with the plate to enclose the magneto parts, a permanent magnet carried by the flywheel and having poles facing the exterior of the flywheel rim, and an armature coil core mounted on the side of the plate opposite the cylinder so that the plate constitutes a heat barrier

between the cylinder and the armature coil core, said core having limbs providing poles in close juxtaposition to the path of the magnet poles to be swept thereby as the flywheel revolves.

2. A magneto assembly for an internal combustion engine having a crankcase with a crankshaft therein and a cylinder mounted on the crankcase, a flywheel on the crankshaft having its side which faces the crankcase hollowed to provide a cavity, a permanent magnet carried by the flywheel with its poles facing the exterior of the flywheel rim, magneto parts inside the flywheel cavity including a circuit breaker for the magneto primary circuit, a cam rotatable with the crankshaft, a pusher pin operable by the cam to actuate the circuit breaker, an armature coil core having spaced limbs providing poles adapted to be swept by the poles of the permanent magnet, a plate closing the crankcase and the cavity formed by the hollow of the fly-wheel and having bores providing bearings for the crankshaft and the pusher pin and extending beyond the rim of the flywheel alongside the cylinder to provide a heat barrier between the cylinder and the armature coil core, and means for mounting the core on said extending portion of the plate.

EDWARD N. JACOBI.

Sept. 17, 1940. A. LEFEBVRE 2,215,106

IGNITION SYSTEM FOR INTERNAL COMBUSTION ENGINES

Filed Sept. 16, 1939

Fig. 1.

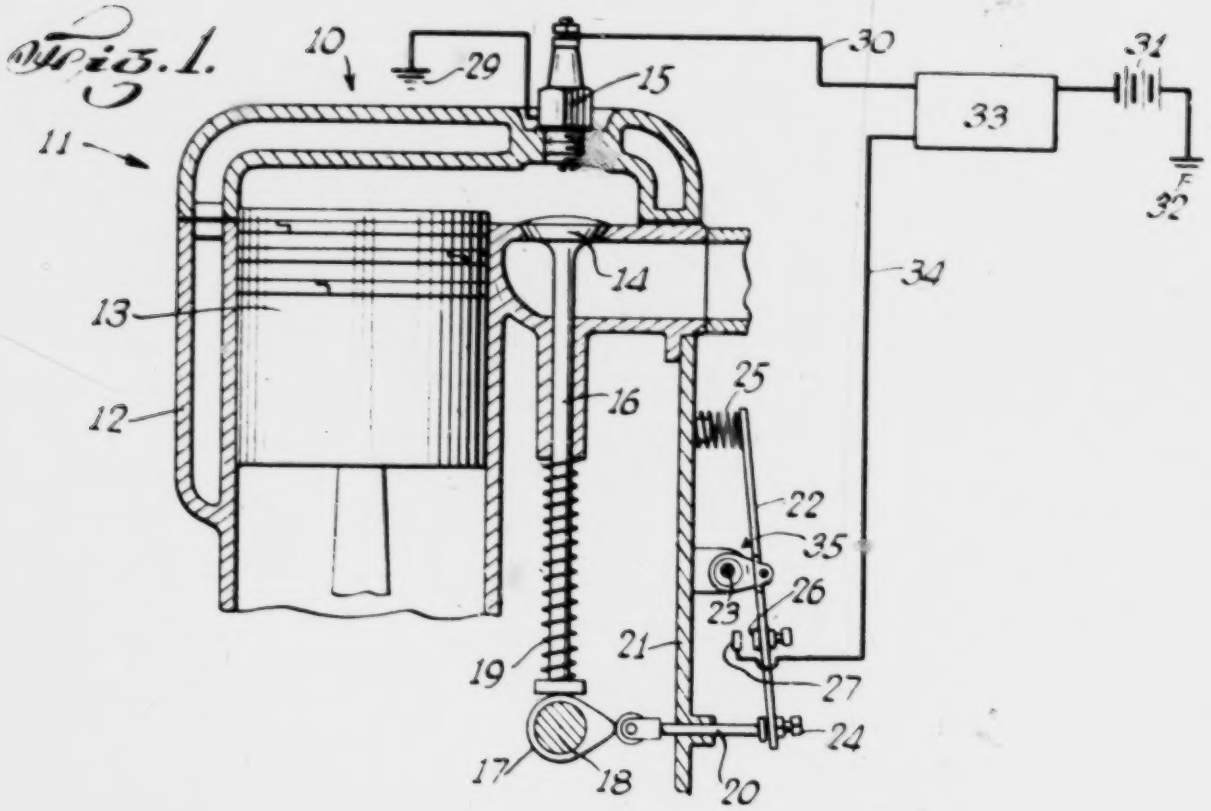

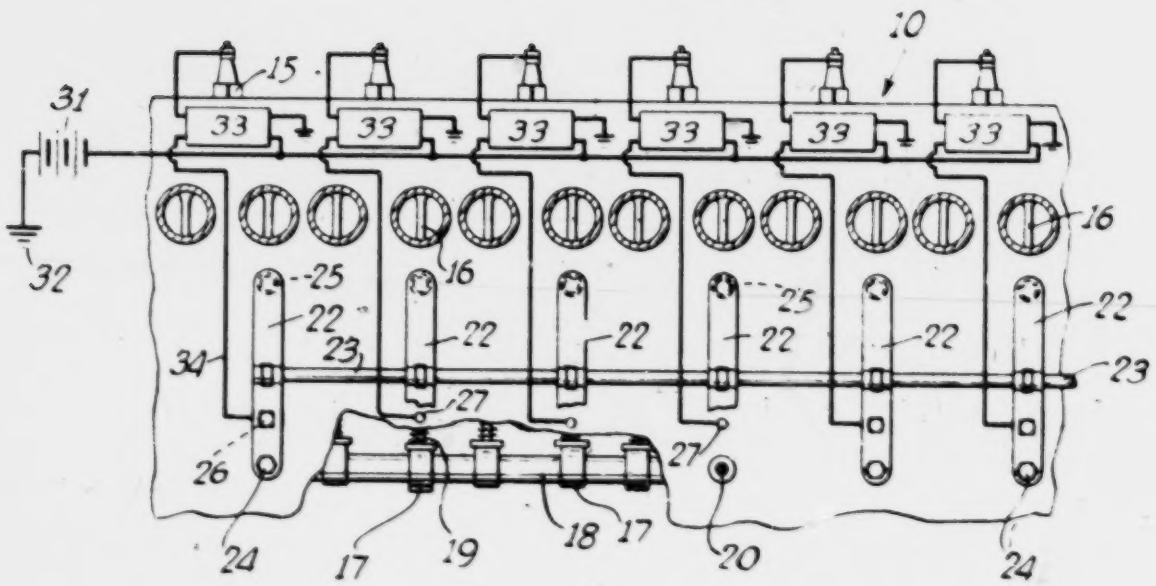

Fig. 2.

INVENTOR
Alde Lefebvre
BY
Young & Thumacher
ATTORNEY

Patented Sept. 17, 1940 2,215,106

UNITED STATES PATENT OFFICE

2,215,106

IGNITION SYSTEM FOR INTERNAL COMBUSTION ENGINES

Aide Lefebvre, New York, N. Y., assignor of one-half to Philip G. Steindler, New York, N. Y.

Application September 16, 1939, Serial No. 295,196

7 Claims. (Cl. 123—146.5)

This invention relates to ignition systems for internal combustion engines of the type adapted for high speed operation.

One object of the invention is to provide such an ignition system wherein the sparking switch shall not be subject to the effects of fatigue or lag as in the high speed switches now in use.

I have perceived that when the internal combustion engine is operated at a high range of speed, the combustible mixture may fail to be properly ignited in certain cylinders of the usual multi-cylinder engine. This condition is not confined to a particular cylinder, but would haphazardly occur first in one and then in another of the cylinders. The indications were that there was either entire or partial failure of a sufficient arc across the spark plug electrodes. These results I traced to the operation of the multi-switch unit or "distributor" which controls the current supply to the different spark plugs. Such unit is provided with a single spring contact arm which upon rotation engages successive contacts for the different spark plugs. Upon further study, I perceived that this spring contact is subjected to bending strains at such high speed and in such extremely rapid succession as to fail to establish proper engagement with each of its companion contacts, so that the lack of ignition or "skipping" heretofore referred to occurs.

The invention therefore aims to provide improved means whereby a sparking switch shall operate at high rapidity, and with the period of its successive operations being nevertheless greatly reduced. In other words, in a six cylinder motor, for example, the switch shall operate only once for each complete cycle of a cylinder, to thus afford a movable contact of actuator spring an opportunity for properly returning to normal position without the effects of lag or fatigue which heretofore resulted.

A further object of the invention is the provision of a device of the nature set forth having few and simple parts, and which is inexpensive to manufacture, install, and adjust, and which shall be free of missing or skipping and avoid backfire while affording maximum speed and power especially in motors of high capacity, and which shall be durable, reliable, and efficient in use.

Other objects and advantages of the invention will become apparent as the specification proceeds.

With the aforesaid objects in veiw, the invention consists in the novel combinations and arrangements of parts hereinafter described in their preferred embodiments, pointed out in the subjoined claims, and illustrated in the annexed drawing, wherein like parts are designated by the same reference characters throughout the several views.

In the drawing:

Figure 1 is a diagrammatic cross sectional view of an internal combustion engine, with an ignition system according to the invention applied thereto.

Fig. 2 is a fragmentary schematic side view of a multi-cylinder engine with the ignition system applied thereto, generally in accordance with the view of Fig. 1.

The advantages of the invention as here outlined are best realized when all of its features and instrumentalities are combined in one and the same structure, but, useful devices may be produced embodying less than the whole.

It will be obvious to those skilled in the art to which the invention appertains, that the same may be incorporated in several different constructions. The accompanyng drawing, therefore, is submitted merely as showing the preferred exemplification of the invention.

Referring in detail to the drawing, 10 denotes a device embodying the invention. The same may include an internal combustion engine 11 that may comprise a plurality of motors, as, for example, six or any other desired number. Each motor may have a piston 13, and a valve means 14, a spark plug 15 being provided for a combustion chamber of any desired arrangement. According to conventional practise, the valve means 14, which may represent preferably an exhaust valve, may have a slide rod 16 engageable by a cam 17 of a cam shaft 18. An expansion coil spring 19 may tend to move the valve stem into engagement with its cam 17. Each motor will thus have two cams on the cam shaft 18, one for the exhaust and one for the inlet valve, and each of the series of motors 12 will have its individual cams on the cam shaft, all in accordance with well known practise.

The ignition system according to the invention may include switches for the individual motors 12, each switch operated in response to a valve cam of its motor. Thus assuming a six cylinder engine, there will be six switches, all alike, except that each is timed according to its particular cylinder or motor.

More particularly, the cam 17 may actuate a follower rod 20 slidably mounted in a supporting member or wall 21 of the engine. This follower 20 may engage a contact or switch member 22,

which may be pivotally mounted at 23. At one end, the member 22 may carry an adjustable set screw 24 for engagement with the follower 20. At its other end, an expansion coil spring 25 may act between the member 22 and the motor block so as to move the member 22 into constant engagement with its cam follower 20. Carried by the member 22 is a contact 26 engageable with a fixed contact 27 which may be grounded to the motor block. Likewise the one terminal of the spark plug 15 may be grounded at 28. From the other terminal thereof extends a conductor 29 to the circuit of the fixed contact 27. A source of electrical current 31, grounded at 32, feeds current to a transformer and condenser unit 33, schematically shown, and which by a like showing is connected at 34 to the contact 27.

In operation, the spring 25 tends to move the member 22 to close the sparking switch 26, 27. When the cam 17 moves to the position shown, it moves the rod 20 toward the right, causing oscillation of the member 22 and opening the switch 26, 27. The break of the branch circuit through the switch 26, 27 causes a flow of current which produces an arc across the spark plug electrodes. It will be understood that the circuit herein shown is merely illustrative, and that any well known circuit may be substituted therefor, and that the invention does not depend on the characteristics of any particular circuit. A unit including a sparking switch 26, 27 and transformer and condenser elements therefor as above described is provided for each of the cylinders of the engine 11. It will be perceived that since the sparking switch is operated from the cam shaft, no accidental change in timing is possible. By utilizing valve cams 17, the need for extra cams is dispensed with. Also the troublesome distributor gear at present in use is eliminated.

If it be desired to advance or retard the spark, a common adjustment for the switches 26, 27 of all of the cylinders may include a rod 23 which forms the pivot hereinbefore mentioned and which is provided with a series of rotary eccentrics 35. In other words, each sparking switch may have its own eccentric. By giving the rod 23 a slight turn in one or in an opposite direction the members 22 are all bodily moved toward the right or toward the left. Individual adjustment for the sparking switches is afforded by the set screws 24.

It will be readily appreciated that the switch 26, 27 represents any suitable type capable of rapid operation, and that the switch will be operated only once for each cycle of its motor. Thus if the engine 11 has six cylinders, each switch will be operated only one sixth as many times as the switch of the distributor now in use. This affords ample time intervals for the switch to rest and avoid fatigue and lag, with consequent skipping or missing at high speeds. Hence still higher motor speeds are available, and uniformly more power and higher motor efficiency will be obtained because all the fuel in the cylinders will be fired; and the even balancing of the motor crank shaft will be maintained to minimise vibration. Nor can any accidental change so affect the time of firing as to cause backfire, since the timing is that caused directly by the cam shaft. These advantages are especially striking with very powerful motors of the types used in tractors, large trucks and aircraft. While a single transformer and condenser unit could be used with all of the sparking switches, it is for certain purposes advantageous to provide a separate such unit for each switch. Thus inspection and repair is greatly facilitated, and if a circuit for one cylinder should for any reason fail, the other cylinders will continue to operate to prevent stalling of the vehicle.

I claim:

1. An ignition system for an internal combustion engine comprising a multi-cylinder motor having a cam shaft for the valves thereof, and means for causing sparks across the electrodes at the different cylinders, including individual switches for the different cylinders, each switch having a plurality of contacts separate of those of the other switches, and individual means operated by the cam shaft for separately actuating the different switches, common means for adjusting all the switches to advance or retard the sparking action, and means for individually adjusting the switches to advance or retard the sparking action, said common means including an adjustable shaft, each switch having a switch arm for a contact, and eccentric mounted on the adjustable shaft for moving the individual switch arms upon manually turning the shaft in one or in an opposite direction.

2. A device including a multi-cylinder internal combustion engine comprising a shaft having cams for individually actuating the exhaust valves of the different cylinders, individual electrical switches for the spark plugs of the different cylinders, and means to control said switches comprising elements for the respective switches individually actuated by the different cams, said elements being wholly separate and independent of said valves and constituting followers in direct engagement with the cams so that said switches are operated at accurately timed intervals irrespective of any retardation or sticking of the valves.

3. A device including a multi cylinder internal combustion engine comprising a shaft having cams for individually actuating the exhaust valves of the different cylinders, individual electrical switches for the spark plugs of the different cylinders, and means to control said switches comprising elements for the respective switches individually actuated and the different switches being disposed in direct juxtaposition to their corresponding cylinders with the said elements extending from the cams directly to their respective switches at right angles to said shaft.

4. A device including a multi cylinder internal combustion engine comprising a shaft having cams for individually actuating the exhaust valves of the different cylinders, individual electrical switches for the spark plugs of the different cylinders, and means to control said switches comprising elements for the respective switches individually actuated by the different cams, said means also comprising individual springs for the different switches to oppose said elements, said means being wholly separate and independent of said valves with said elements constituting followers in direct engagement with the cams for causing accurately timed operation of the switches irrespective of the valve response to the cams, said motor having a wall for mounting said switches and said springs, guide means for the said elements carried by said wall, said elements being rods longitudinally slidably carried by the guide means and extending from the cams directly to their respective switches at right angle to said shaft.

5. A device including a multi cylinder internal combustion engine comprising a shaft having

cams for individually actuating the exhaust valves of the different cylinders, individual electrical switches for the spark plugs of the different cylinders, and means to control said switches comprising elements for the respective switches individually actuated by the different cams, said elements being wholly separate and independent of said valves and constituting followers in direct engagement with the cams so that said switches are operated at accurately timed intervals irrespective of any retardation or sticking of the valves, each switch having a swingable arm for opening and closing the switch, and means for mounting said arms comprising eccentric means and a common shaft for the different arms, said shaft having fixed bearings and being rotatable relative to said arms, and the shaft and eccentric means coacting with each other so that an angular movement of said shaft bodily moves all of said arms to thus advance or retard the timing of all the switches by a single adjusting movement.

6. A device including a multi cylinder internal combustion engine comprising a shaft having cams for individually actuating the exhaust valves of the different cylinders, individual electrical switches for the spark plugs of the different cylinders, and means to control said switches comprising elements for the respective switches individually actuated by the different cams, said elements being wholly separate and independent of said valves and constituting followers in direct engagement with the cams so that said switches are operated at accurately timed intervals irrespective of any retardation or sticking of the valves, said switches having a first series of contacts and a second series of contact for opening and closing of the switches, a common shaft for mounting one of said series of switches, fixed bearings for said shaft and eccentrics for said shaft coacting therewith so that a turning movement of the shaft causes a variation in gaps between the contacts for advancing or retarding the timing of the switches.

7. A device including a multi cylinder internal combustion engine having individual switches for the spark plugs of the different cylinders, each switch having a first contact and a second contact, a lever for the second contact, a spring for each lever tending to move the same in one direction, elements operated by a cam shaft for the cylinder exhaust valves for causing individual movement of the levers in an opposite direction, a common shaft for pivotally mounting the different levers, fixed bearings for said shaft, and eccentrics for the shaft cooperating with the lever so that an angular turn of the shaft causes bodily movement of the levers relative to the first contacts for advancing or retarding the timing of all the switches.

ALDE LEFEBVRE.

Oct. 15, 1940. L. E. FOWLER 2,218,332

INTERNAL COMBUSTION ENGINE

Filed April 10, 1939 2 Sheets-Sheet 1

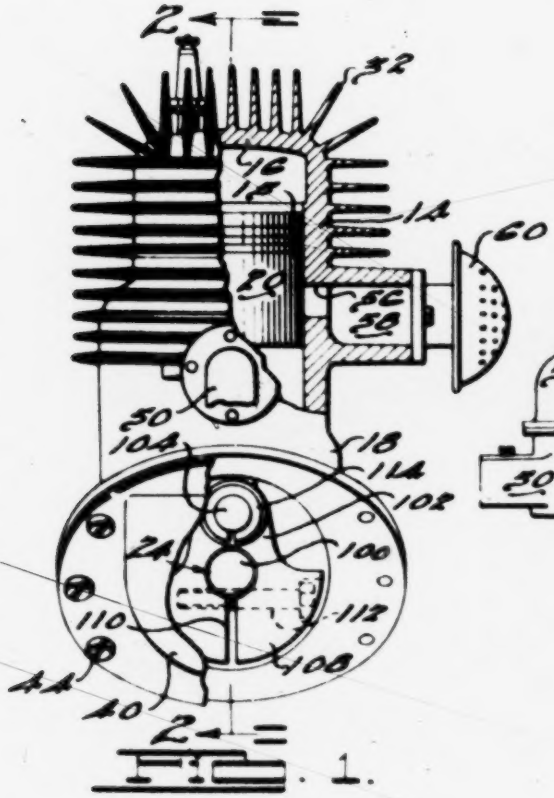

FIG. 1.

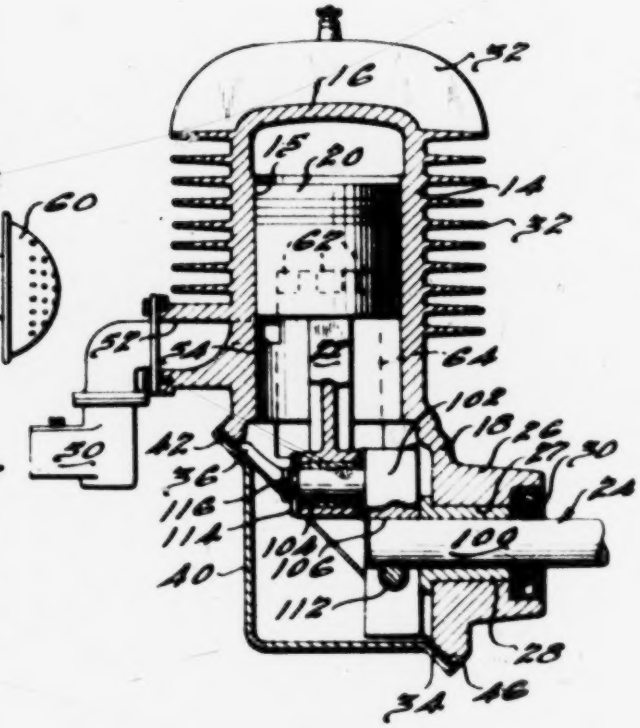

FIG. 2.

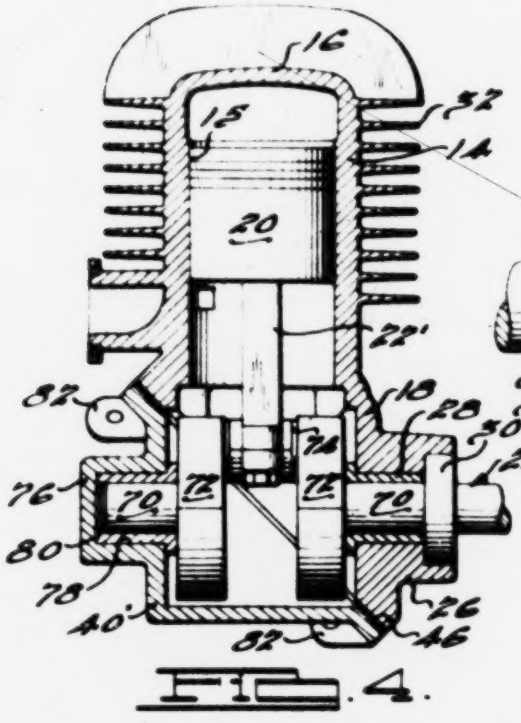

FIG. 4.

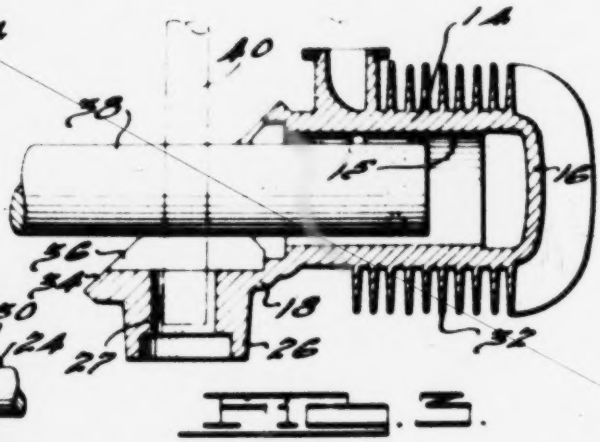

FIG. 3.

INVENTOR
Leonard E. Fowler.
BY
Harness, Dickey & Pierce.
ATTORNEYS.

Oct. 15, 1940. L. E. FOWLER 2,218,332

INTERNAL COMBUSTION ENGINE

Filed April 10, 1939 2 Sheets-Sheet 2

FIG. 5.

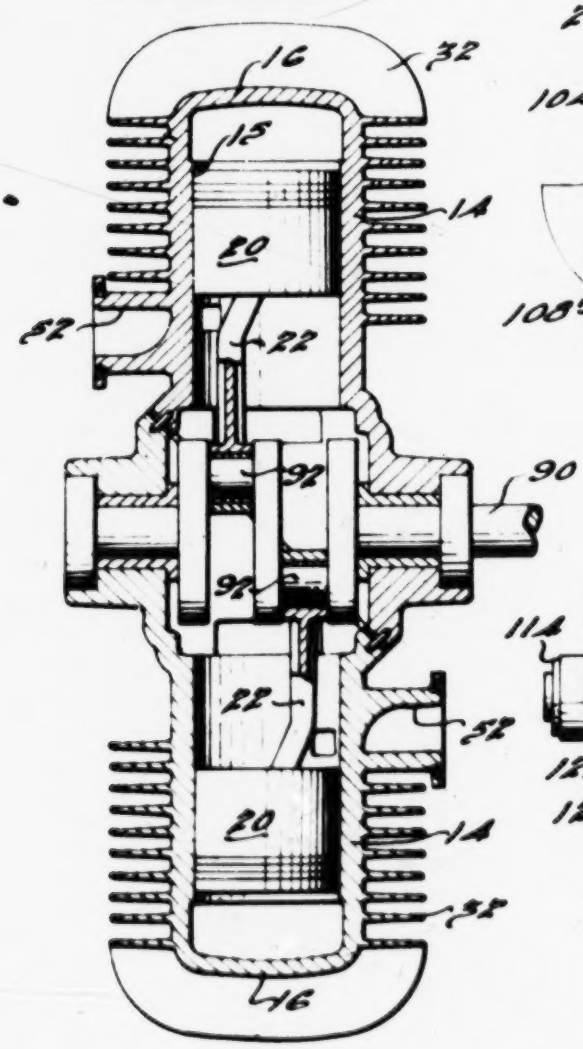

FIG. 6.

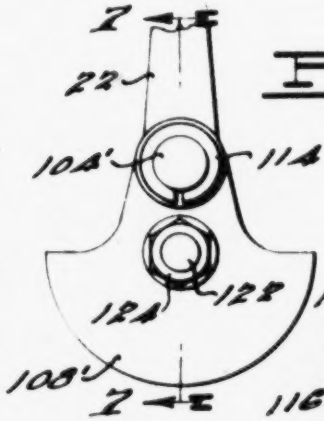

FIG. 7.

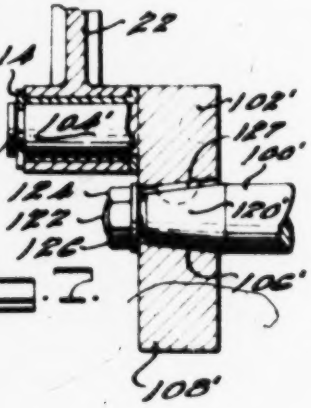

FIG. 8.

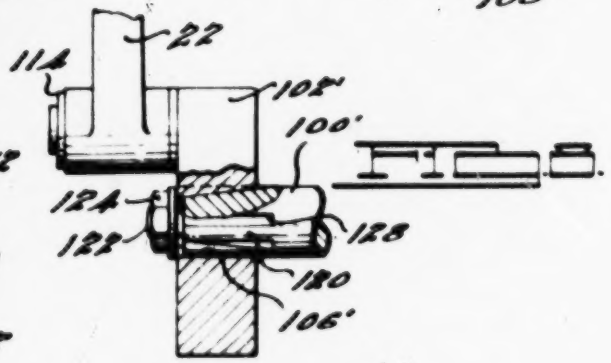

FIG. 10.

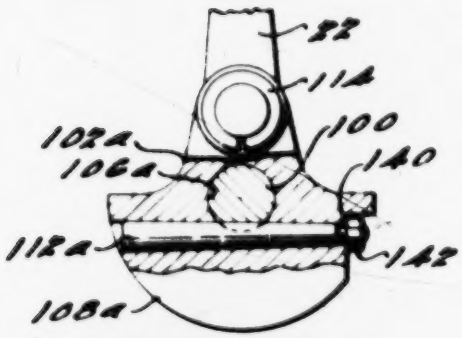

FIG. 9.

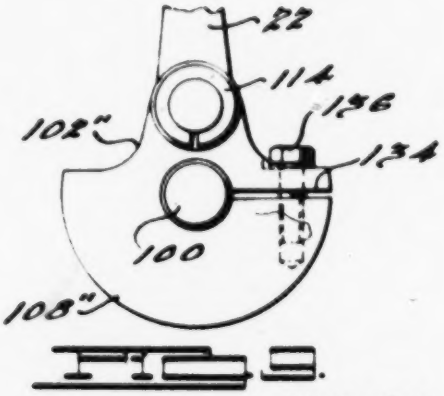

INVENTOR
Leonard E. Fowler.
BY
Harness, Dickey & Pierce.
ATTORNEYS.

Patented Oct. 15, 1940 2,218,332

UNITED STATES PATENT OFFICE

2,218,332

INTERNAL COMBUSTION ENGINE

Leonard E. Fowler, Detroit, Mich.

Application April 10, 1939, Serial No. 266,933

10 Claims. (Cl. 123—195)

This invention relates to internal combustion engines, pumps, compressors or the like and has for its principal object the provision of a construction of simplified form producing marked economies in manufacture. Reference will be made herein only to the application of the invention to internal combustion engines, this for the purpose of simplicity in description, and the application of the invention to other like uses will thus be made clear to those skilled in the art.

Other objects of the invention include the provision of an internal combustion engine having a cylinder and at least a part of the crankcase thereof formed integrally with each other, the crankcase portion having an open side through which tools may be inserted to machine the interior of the cylinder for reception of a piston and the crankcase for reception or formation of the crankshaft bearings therein; the provision of an internal combustion engine including a cylinder and a crankcase portion formed integrally therewith, the crankcase portion being provided with a face extending at an angle to both the axis of the cylinder and to the axis of the crank shaft and having an opening in such face whereby to permit the insertion of tools into the bore of the cylinder and into the crankcase for effecting a machining operation upon the same; the provision of an internal combustion engine having a cylinder provided with an integral cylinder head and crankcase portion, the crankcase portion adapted to rotatably support a crank shaft disposed at right angles to the axis of the cylinder, the crankcase having a planular face disposed at an angle to both the axis of the crank shaft and to the cylinder axis providing an opening leading into the crankcase through which tools may be inserted to machine both the bore of the cylinder and the crankshaft bearing receiving portion of the crankcase, means being provided for effecting a closure of the opening for normal engine operating conditions; the provision of a construction as above described in which the means for closing the opening in the crankcase also serves to provide means for supporting an additional bearing for the crank shaft; and the provision of an internal combustion engine as above described in which complementary cylinder and crankcase portions are arranged in opposed relationship with the crankcase portions cooperating with one another to close the corresponding mentioned openings.

Other objects of the invention include the provision of an internal combustion engine having a crankcase face directed at an angle to the axis of both the crank shaft and the cooperating cylinder, the cylinder being provided with a piston connected by means of a connecting rod to the crank shaft, the throw of the crank shaft being removable with respect to the crank shaft proper whereby to permit the use of unsplit large ends on the connecting rods, and the provision of an engine crank shaft for an internal combustion engine including separately formed throw portions removably secured to the crank shaft in a novel manner.

The above being among the objects of the present invention the same consists in certain novel features of construction and combinations of parts to be hereinafter described with reference to the accompanying drawings, and then claimed, having the above and other objects in view.

In the accompanying drawings which illustrate suitable embodiments of the present invention and in which like numerals refer to like parts throughout the several different views,

Fig. 1 is a partially broken, partially sectioned end elevational view of an internal combustion engine constructed in accordance with the present invention;

Fig. 2 is a vertical sectional view of the engine shown in Fig. 1 taken on the line 2—2 thereof;

Fig. 3 is a sectional view of the cylinder and integrally connected crankcase part of the engine shown in Fig. 2, and taken in the same plane as Fig. 2, illustrating the manner in which the cylinder bore and the crank shaft bearing receiving bore may be machined by tools passing through the one opening in the crankcase;

Fig. 4 is a view similar to Fig. 2 but illustrating a modified form of construction in which the crank shaft is provided with two bearings instead of one;

Fig. 5 is a view similar to Fig. 2 but illustrating the use of the cylinder and crankcase combination illustrated in Fig. 2 in duplicate to provide a two cylinder opposed engine;

Fig. 6 is a partially broken front end elevational view of a modified crank shaft construction, illustrating a connecting rod shown in broken view operatively associated therewith;

Fig. 7 is a vertical sectional view taken on the line 7—7 of Fig. 6;

Fig. 8 is a view similar to Fig. 7 but illustrating a modified construction for securing a throw on the end of the crank shaft;

Fig. 9 is a view similar to Fig. 6 but illustrating a modified form of construction; and

Fig. 10 is a view similar to Figs. 6 and 9, but partially broken, and illustrating a further modi-

fied construction for securing a throw on the end of a crank shaft.

The present invention has for its principal object the provision of a simple and economical construction for the cylinders and crankcase portions of internal combustion engines which will not only simplify the foundry practices and costs in connection with the same but will facilitate the principal machining operation thereon. In other words the present invention is directed to a construction which will render the manufacture of certain types of internal combustion engines considerably more economical than is possible with conventional types of constructions and this without detracting from the desired qualities of rigidity and efficiency required in such engines for long life operation.

The present invention is applicable for use in connection with internal combustion engines of either the two or four stroke principles, Diesel engines or any other type of engine including a crank shaft and a piston reciprocable along an axis at substantially right angles thereto. Because of its nature it will usually find greater application in engines of the smaller sizes and to engines of the single or double opposed cylinder type although it will not be necessarily restricted to these types in all cases. Because of the simplicity of the construction of the conventional form of two cycle engines employing a carburetted mixture, this particular type of engine has been selected for the purpose of illustrating the present invention in the accompanying drawings, the showing in this respect being illustrative and not limiting.

Referring now to the accompanying drawings and particularly to Figs. 1, 2 and 3, an internal combustion engine is shown comprising a cylinder 14 provided with a bore 15, an integral cylinder head 16, and an integral crankcase portion 18. The bore 15 of the cylinder 14 is interiorly provided with a conventional piston 20, reciprocable therein, connected in a conventional manner by means of a connecting rod 22 to a crank shaft indicated generally at 24. The crank shaft 24 is rotatably supported in the crankcase 18 with its axis arranged perpendicularly to the axis of the cylinder 14 through the medium of an integral axial extension 26 on the crankcase 18. Although the extension 26 may be of any suitable length and contain any suitable or desirable number of bearing elements arranged in adjacent or suitably axially spaced relationship for rotatably supporting the crank shaft 24, the extension 26 is shown by way of illustration as having a bore 27 containing a single bearing bushing 28 for rotatably supporting the crank shaft 24. Preferably the outer end of the bore 27 is provided with a conventional oil seal element 30 for preventing the escape of lubricant from the interior of the engine along the crank shaft.

The cylinder 14 may, of course, be cooled in any suitable or conventional manner but for the purpose of illustration in the present case it is shown as of the air cooled type and, accordingly, as being provided with a plurality of cooling fins 32 for dissipating the heat from the cylinder 14 to the surrounding air.

The important feature of the present invention is that the crankcase or crankcase portion 18 is provided with a planular face 34 which extends at an angle to both the axis of the crank shaft 24 and the axis of the cylinder 14. The angularity of the face 34 may vary from that shown in order to satisfy the desires of the particular designer, but preferably it is disposed at an angle of 45° to the axis of the cylinder and crank shaft as shown in the drawings. The face 34 is provided with an opening 36 therein through which the full extent of the bore 15 of the cylinder 14 and the full extent of the bore 27 for the bearing bushing 28 in the extension 26 is viewable axially of such bores. As illustrated in Fig. 3 this feature permits a boring or other tool such as 38 to be introduced into the bore 15 of the cylinder 14 axially thereof for the purpose of machining or otherwise finishing such bore, and also permits a boring or other tool such as 40 to also be introduced through the opening 36, but, of course, at a time when the boring tool 38 is not in operative position, to bore the hole 27 for the bushing bearing 28, or an equivalent bore for receiving the crank shaft if no bearing bushing or the like is to be employed.

The above described feature permits the combined cylinder 14, cylinder head 16 and crank case portion 18, forming an integral unitary structure, to be mounted in a suitable machine tool and permit both the bore 15 of the cylinder 14 and the hole 27 to be machined without requiring shifting of the unit in any respect whatever. The construction thus permits a single set up for boring both the bore 15 of the cylinder and the hole 27, consequently reduces the cost of machining these bores as compared to conventional practices, and materially simplifies the accurate location and angularity of one with respect to the other. Additionally it will be observed that because of the angular face 34 and the relatively large opening leading into the bore of the cylinder and the interior of the crankcase, it facilitates the casting of the unit in the foundry, permits a secure support for the various cores required, and thus permits the cores to be maintained in their proper position during the pouring operation and in fact is such as to permit the use of a green sand core for forming the bore of the cylinder and the interior of the crankcase under certain circumstances. Thus it will be observed that because of the provision of the angular face 34 with the relatively large opening 36 therein both the casting and the machining of the unit is considerably simplified and rendered materially more economical than is possible with conventional constructions, resulting in a product that is considerably less expensive to manufacture and sell and yet one that suffers no loss from rigidity or efficiency because of these economies.

Where the crankcase 34 is provided with a single throw, the opening 36 will be closed by a simple pan-like structure 60 closing the opening 36 and having marginal flanges 62 complementary to the marginal portions of the face 34 and suitably secured thereto as by screws or bolts 64 with the preferable interposition of a suitable gasket 66. The closure 60 is thus of a nature similar to the conventional oil pans employed on internal combustion engines and, as will be appreciated, may be formed of either a stamping or a casting. It will, of course, be observed that the pan-like closure 60 is of a sufficient size to permit the necessary rotation of the crank shaft and lower end of the connecting rod 22 therein but where the engine is of a two cycle type, as in the case illustrated, it will usually be desirable to maintain the volume of the crankcase including that of the pan 60 at a minimum figure, while in the case of a four-cycle engine or of a Diesel type engine this volume is not of such great importance and it may be made of sufficient size to hold the usual supply of lubricating oil or the like

as will be appreciated by those skilled in the art.

It may be noted that in the particular engine shown, it being of a two-cycle type, it is provided with a conventional carburetor 80 which communicates with an intake passage 82 formed in the lower portion of the cylinder 14 and connected into the bore 16 of the cylinder 14 through a plurality of ports 84 which are uncovered by the piston 20 as the latter approaches the upper limit of its compression stroke. Thus the piston in moving outwardly in the cylinder 14 creates a partial suction in the crankcase 18 and as soon as the piston 20 uncovers the port 84 this partial suction is relieved by a flow of combustible mixture through the carburetor 80, passage 82 and ports 84 into the crankcase. As the piston 20 moves downwardly after the crankcase has thus been filled with a combustible mixture through the ports 84, it first closes the ports 84 to the escape of combustible mixture therethrough and continued downward movement compresses the combustible mixture in the crankcase and lower part of the cylinder, and as the piston approaches its bottom dead center position it first uncovers the exhaust port 86 which permits the escape of exhaust gases outwardly therethrough into the passage 86 and through a muffler such as 88 to the atmosphere. Shortly after the piston 20 uncovers the exhaust ports 86 in its downward movement it uncovers the inlet ports 92 in the opposite sides of the cylinder and illustrated in dotted lines in Fig. 2. The inlet ports 92 are connected by a passage 94 with the interior of the crankcase 18 adjacent the lower end of the cylinder 14 so that as the ports 92 are uncovered by the piston 20 the combustible mixture compressed in the crankcase is permitted to flow up into the cylinder 14 where it is compressed and exploded on the following stroke.

Where it is desired to use a crank shaft having a journal on opposite sides of the crank pin thereof, then resort may be had to the construction illustrated in Fig. 4. It will be observed that in this case the crank shaft 24' is provided with spaced journals 70, spaced throws 72 and a crank pin 74, all formed integrally with one another in accordance with conventional practice, and the journal 70 is rotatably supported in the bearing bushing 28 as in the previously described construction. However in this case, instead of employing the pan member 40 described in connection with Figs. 1 and 2, a modified form thereof indicated at 40' is employed in its place. In this case the closure member 40' is preferably of cast construction and is provided with an axial extension 76 interiorly provided with a blind bore 78 receiving a bearing bushing 80 for receiving the remaining journal 70. The closure member 40' is, of course, secured to the integral cylinder and crankcase unit in the same manner as the previously described closure 40 and is sealed thereto by means of an equivalent gasket 46. In Fig. 4 the closure member 40' is illustrated as being provided with a plurality of apertured lugs 82 which may be employed as a mounting means for the engine if desired.

Where it is desired to construct a two cylinder opposed engine, the same general effect as obtained in Fig. 4 may be obtained but without the use of a closure member additional to the crankcase and cylinder units themselves. As illustrated in Fig. 4 a pair of units identical to those illustrated in the previous views and each including a cylinder 14, cylinder head 16 and crankcase portion 18 are arranged in opposed relation and with the angular faces 34 thereof in opposed contacting relation with respect to each other and suitably secured together in such a position. Inasmuch as this requires one of the cylinders to be turned 180° with respect to the other it provides spaced journals for the crank shaft 98 and each of the units serves as a closure for the opposite unit. In this case where the engine is of the two stroke type, the crank shaft 96 is necessarily provided with a pair of crank pins 97 spaced angularly from one another by 180°, one piston 20 being connected to a corresponding crank pin. It will be observed that the feature of providing the angular face on the integral cylinder and crankcase portion of the present invention thus admirably adapts it to use as either a single or a double opposed cylinder engine.

Referring now to the construction shown in Figs. 1 and 2 it will be appreciated that if the large end of the connecting rod 22 is not of a split character it is impossible to use a crank shaft in which the throw and the crank pin are formed integrally therewith for in such case it would be impossible to either assemble or disassemble the structure. The crank shaft may be of an integral construction if the big end of the connecting rod is of a conventional split character embodying a removable cap or lower half. Where the big end of the connecting rod is not of a split character, it is then necessary to make either the throw, the crank pin or both removable from the main portion of the crank shaft. This latter construction is shown as forming one feature of the present invention and resulting in a construction more economical to manufacture than one requiring a split bearing on the connecting rod as well as effecting certain economies where the engine is employed to drive certain other devices and particularly where a part of such other device is built upon the crank shaft.

Accordingly, in the construction illustrated in Figs. 1 and 2 the crank shaft 24 comprises a separately formed cylindrical part 100 serving to provide the main journal of the crank shaft and through which the engine may be connected to some driven device. The throw 102 and the crank pin 104 are preferably formed integrally with one another but separately of the part 100. The throw 102 is provided with a hole or bore 106 therein in which the corresponding end of the shaft 100 is closely received. The throw 102 is formed to provide the usual counterweight 108 thereon for counterbalancing the weight of the piston 20 and part of the connecting rod 22 and the counterweight portion is centrally split as at 110 into the bore 106. A bolt or screw 112 is extended through the counterweight portion 108 as best illustrated in Fig. 1 across the line of split 110 and in partially intersecting relation with respect to the end of the shaft 100 received in the bore 106. The intersecting relation of the screw 112 with the shaft 110 serves as a key to positively prevent relative rotation of the throw 102 with respect to the shaft 100 and by tightening up the screw 112 it contracts the wall of the opening 106 about the end of the shaft 100 to rigidly secure the same in place. The screw or bolt 112 is readily accessible through the opening 36 after the pan 40 has been removed and this permits ready assemblage and dis-assemblage of the crank shaft. In assembling the piston, connecting rod and crank shaft in the engine, the connecting rod 22 is connected to the piston 20 in the conventional manner by means of a wrist pin (not shown) the

crank pin 104 is inserted in the large end of the connecting rod, the piston is inserted into the bore 15, and then the shaft 100 is introduced into place and is then forced into the bore 106 of the throw 102 after which the screw 112 is inserted and tightened up. In some instances it may be desirable to provide some means on the free end of the crank pin 104 to prevent possible axial movement of the big end of the connecting rod 22 thereon. While any suitable means may be provided for this purpose the particular means shown comprises a split washer 114 which is sprung into a groove 116 formed in the outer end of the crank pin 104 immediately outwardly of the corresponding end of the connecting rod big end as best brought out in Fig. 2.

In the construction illustrated in Fig. 4, the throws of the crank shaft and the crank pin are all integral with one another and in such case it is necessary to provide the big end of the connecting rod 22' with a removable cap in accordance with conventional practice. The crank shaft shown in Fig. 5 also includes throws and pins formed integrally with the main portion of the shaft and consequently requires the connecting rods to be provided with removable end caps for the purpose of assembly and dis-assembly.

In Figs. 6 and 7 a modification of the type of crank shaft construction as shown in Figs. 1 and 2 is illustrated and which, accordingly, permits the use of an unsplit big end for the connecting rod 22. In this case the crank pin is illustrated at 104' and identical in construction to the crank pin 104 previously described. The throw 102' is similar to the throw 102 previously described and is provided with a similar counterweight 108'. In this case, however, the counterbalance portion 108' is not split but instead the corresponding end of the shaft 100' is tapered as at 120 and its extreme end portion is formed to provide a short stud 122 thereon. The bore 106' in the throw 102' in this case is formed for complementary reception of the tapered end 120 of the shaft 100' and it is maintained securely in place thereon by means of a nut 124 threaded on the stud 122 in conjunction with a washer 126. A key 127 is employed between the tapered end 120 and the throw 102' to positively prevent relative rotation between these parts.

The construction illustrated in Fig. 8 is identical to that illustrated in Figs. 6 and 7 and similar parts are indicated by the same numerals, the main difference in this case being that the tapered end 120' of the shaft 100' is provided with a plurality of splines 128 thereon and the bore 106' is provided with a corresponding number of opposed grooves or keyways which receive the splines 130 therein to prevent relative rotation between the throw and the shaft portion 100'. The peripheral surfaces of the splines lie in the surface of a cylinder and the keyways in the throw 102' are correspondingly formed, this for the purpose of ease in manufacture.

In the modification illustrated in Fig. 9 the same shaft 100 is employed as in Figs. 1 and 2 and the throw 102'' is provided with a counterweight portion 108'' the same as in the construction illustrated in Figs. 1 and 2 and is provided with a cylindrical bore for reception of the outer end of the shaft 100. The counterbalance portion 108'' is in this case also split but instead of being split centrally is split adjacent one edge of the counterweight illustrated at 134 and a screw 136 is extended through the split portion of the counterbalance 108'' to contract the corresponding portion of the throw 102'' about the outer end of the shaft 100.

In the construction illustrated in Fig. 10 the same shaft 100 is employed as in Figs. 1 and 2 and in Fig. 9. The throw 102a is provided with a counterbalance portion 108a and is provided with a bore 106a for reception of the outer end of the shaft 100 the same as in the construction illustrated in Figs. 1 and 2. The counterbalance portion 108a is not split in this modification but a pin 112a corresponding to the screw 112 previously described passes transversely through the counterbalance portion 108a in intersecting relation with respect to the surface of the shaft 100. The pin 112a in this case, however, is of tapered conformation and the small end thereof which projects beyond the corresponding faces of the counterbalance portion 108a is formed to provide a stud 140 thereon which receives a nut 142 and serves to draw the same tightly into engagement with the outer end of the shaft 100.

It will be appreciated that any of the constructions illustrated in Figs. 6 to 10, inclusive, are applicable for use in place of the construction illustrated in Figs. 1 and 2.

Formal changes may be made in the specific embodiments of the invention described without departing from the spirit or substance of the broad invention, the scope of which is commensurate with the appended claims.

What I claim is:

1. In combination, a cylinder head, a crankcase portion formed integrally with said cylinder, a bore in said cylinder for reception of a piston, a bore in said crankcase for reception of a crank shaft and arranged with its axis perpendicular with respect to the axis of said cylinder, a face on said crankcase portion extending at an angle to the axes of both the cylinder and said bore for said crank shaft and having an opening therein through which tools may be inserted to machine both the bore of said cylinder and said bore for said crank shaft, and a closure for said opening.

2. In combination, a cylinder having a bore and a piston reciprocable therein, a crankcase portion integral with said cylinder and having a bore therein arranged at right angles to the axis of said cylinder, a crank shaft rotatably mounted in the last mentioned bore, means operatively connecting said crank shaft and said piston, a face on said crankcase portion disposed at an angle to both of said bores, said face having an opening therein through which the entire circumference of both of said bores are viewable axially of said bores, and means sealed to said face forming a closure for said opening.

3. In combination, a cylinder having a bore adapted to receive a piston, a crankcase portion formed integrally with said cylinder and having a bore adapted to receive a crank shaft with its axis at right angles to the bore of said cylinder, and a face on said crankcase portion arranged with the plane thereof at an angle to both of said bores, said face having an opening therein through which tools may be introduced into both of said bores axially thereof for the purpose of machining the same.

4. In combination, a cylinder having a bore, a crankcase portion formed integrally with said cylinder and provided with a bore for reception of the crank shaft, said bores being arranged at right angles to one another, a planar face on said crankcase portion arranged with the plane thereof disposed at an angle of approximately 45° to the axis of both of said bores, said face having

an opening therein providing access to both of said bores.

5. In an internal combustion engine or the like, in combination, a cylinder, a piston reciprocable in said cylinder, a crankcase portion formed integrally with said cylinder and having a bore disposed at right angles to the bore of said cylinder, a crank shaft rotatably mounted in said bore in said crankcase portion, means operatively connecting said crank shaft and piston, a planar face on said crankcase portion disposed at an angle to both the axes of said cylinder and said crank shaft, said face having an opening therein through which said piston is removable and permitting an unobstructed view of the entire circumferential extent of the bore in said crankcase portion axially thereof, and a pan closing said opening.

6. In an internal combustion engine or the like, in combination, a cylinder, a piston reciprocable in said cylinder, a crankcase portion formed integrally with said cylinder and having a bore therein disposed at right angles to the bore of said cylinder, a crank shaft rotatably mounted in said bore in said crankcase portion, means operatively connecting said crank shaft and piston, said crankcase portion having a planar face thereon disposed at an angle to the axis of both said cylinder and said crank shaft, an opening in said face permitting the introduction of tools into both of said bores axially thereof for the purpose of machining the same, and a closure for said opening forming an additional bearing for said crank shaft.

7. In an internal combustion engine or the like, in combination, a pair of cylinders arranged in opposed relationship, a crankcase portion integral with each of said cylinders, said crankcase portions having a line of split between them arranged in a plane disposed at an angle to the axes of both said cylinders, means securing said crankcase portions together, a bearing carried by each of said crankcase portions, and a crank shaft rotatably supported between said bearings.

8. A two cylinder opposed internal combustion engine or the like comprising, in combination, a pair of identical cylinder and crankcase units arranged in opposed relationship and secured together, each of said units including a cylinder and a crankcase portion formed integrally therewith, a crank shaft bearing carried by each of said crankcase portions with the axis thereof arranged perpendicularly with respect to the axis of the corresponding cylinder, an angularly disposed face on the crankcase portion of each of said units and said angularly disposed faces being secured together in opposed and complemental relationship with the axes of said cylinders aligned with one another, a crank shaft rotatably mounted between the bearings of said units, a piston in each of said cylinders, and means operatively connecting said pistons to said crank shaft.

9. In an internal combustion engine or the like, in combination, a cylinder, a piston reciprocable in said cylinder, a crankcase portion formed integrally with said cylinder and having a bore therein disposed at right angles to the axis of said cylinder, a crank shaft rotatably mounted in said bore, means operatively connecting said crank shaft and said piston, said crank shaft including a cylindrical shaft portion and a separately formed throw and crank pin portion removably received thereon, means locking said throw to said cylindrical portion, and a planar face on said crankcase portion disposed at an angle to both the axes of said cylinder and said crank shaft, and said face having an opening therein through which both said throw and piston are removable.

10. In an internal combustion engine or the like, in combination, a cylinder, a piston reciprocable in said cylinder, a crankcase portion formed integrally with said cylinder and having a bore therein disposed at right angles to the axis of said cylinder, a crank shaft rotatably mounted in said bore, means operatively connecting said crank shaft and said piston, said crank shaft including a cylindrical shaft portion and a separately formed throw and crank pin portion removably received thereon, means comprising a member carried by said throw in intersecting relation with respect to the surface of said cylindrical portion locking said throw to said cylindrical portion, and a planar face on said crankcase portion disposed at an angle to both the axes of said cylinder and said crank shaft, and said face having an opening therein through which both said throw and piston are removable.

LEONARD E. POWLEY

Dec. 31, 1940. W. C. CONOVER 2,227,247

ENGINE

Filed Dec. 4, 1939 5 Sheets-Sheet 1

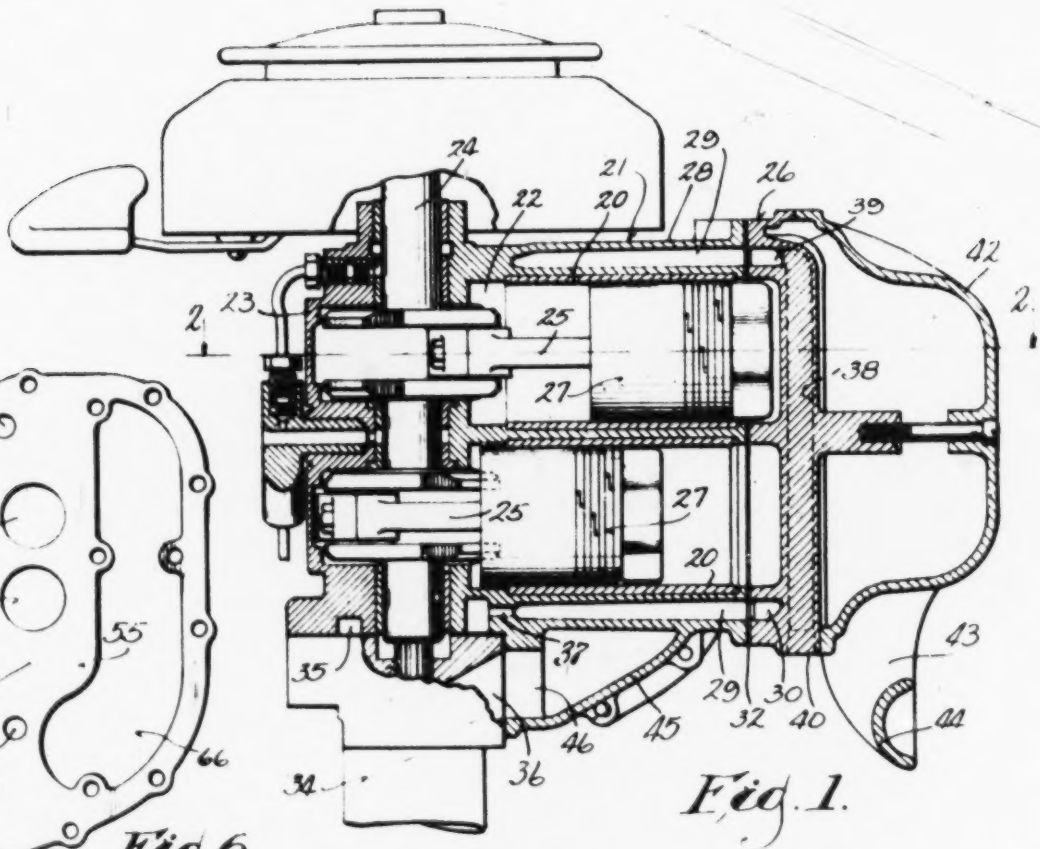

Fig. 1.

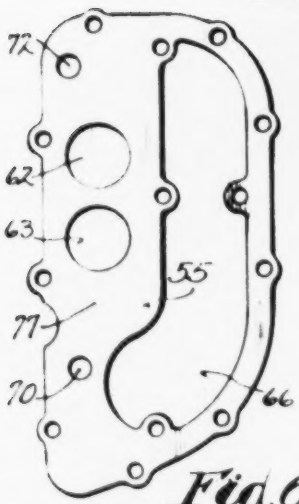

Fig. 6.

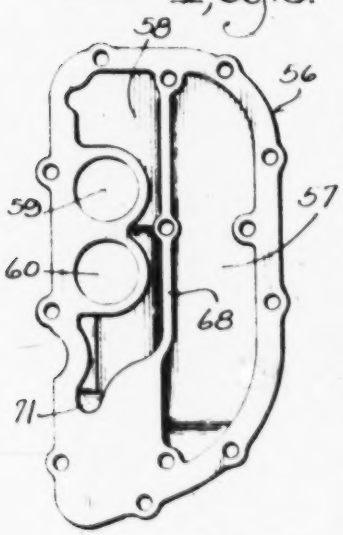

Fig. 5.

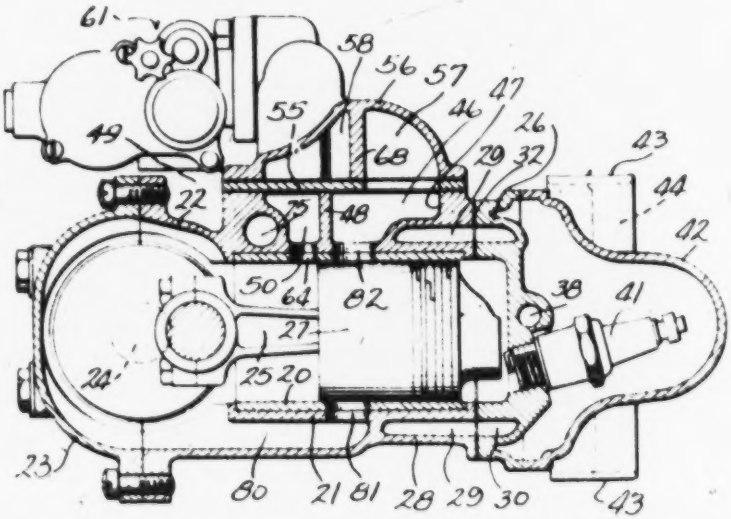

Fig. 2.

INVENTOR
WARREN C. CONOVER

BY
Wheeler, Wheeler & Wheeler
ATTORNEYS

Dec. 31, 1940. W. C. CONOVER 2,227,247

ENGINE

Filed Dec. 4, 1939 5 Sheets-Sheet 2

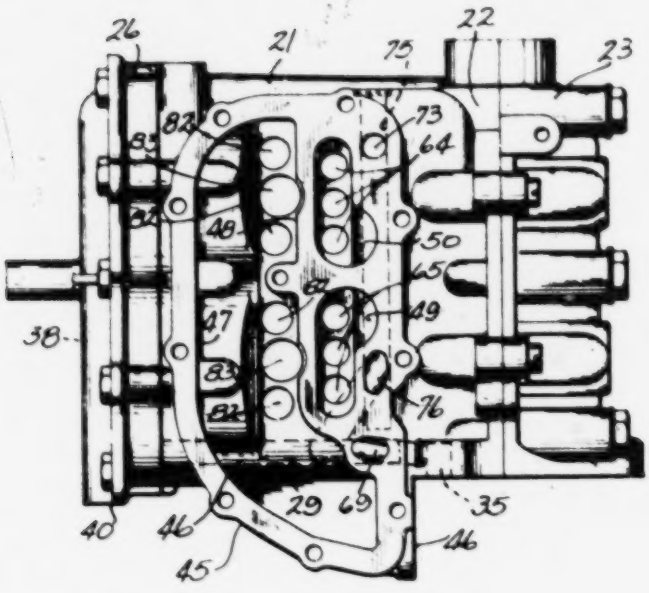

Fig. 3.

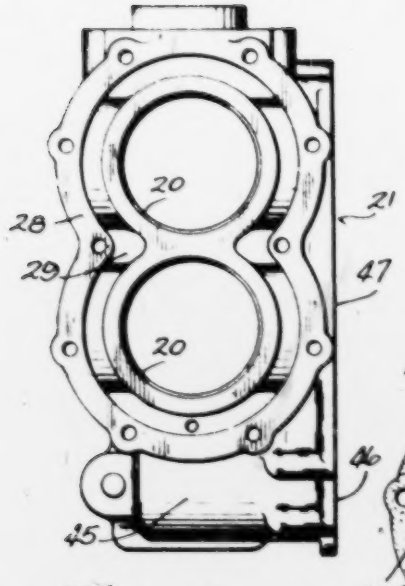

Fig. 4

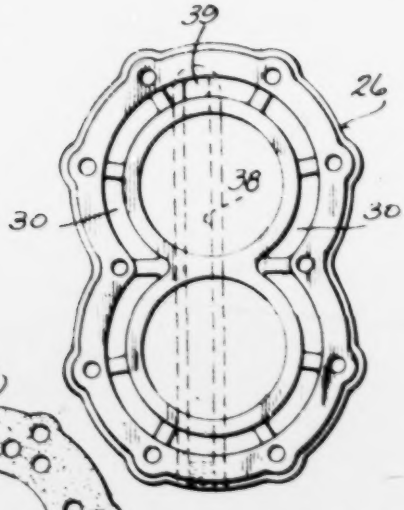

Fig. 7.

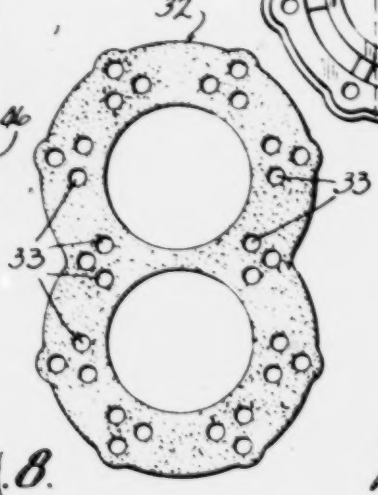

Fig. 8.

INVENTOR
WARREN C. CONOVER
BY
Wheeler, Wheeler & Wheeler
ATTORNEYS.

Dec. 31, 1940. W. C. CONOVER 2,227,247

ENGINE

Filed Dec. 4, 1939 5 Sheets-Sheet 3

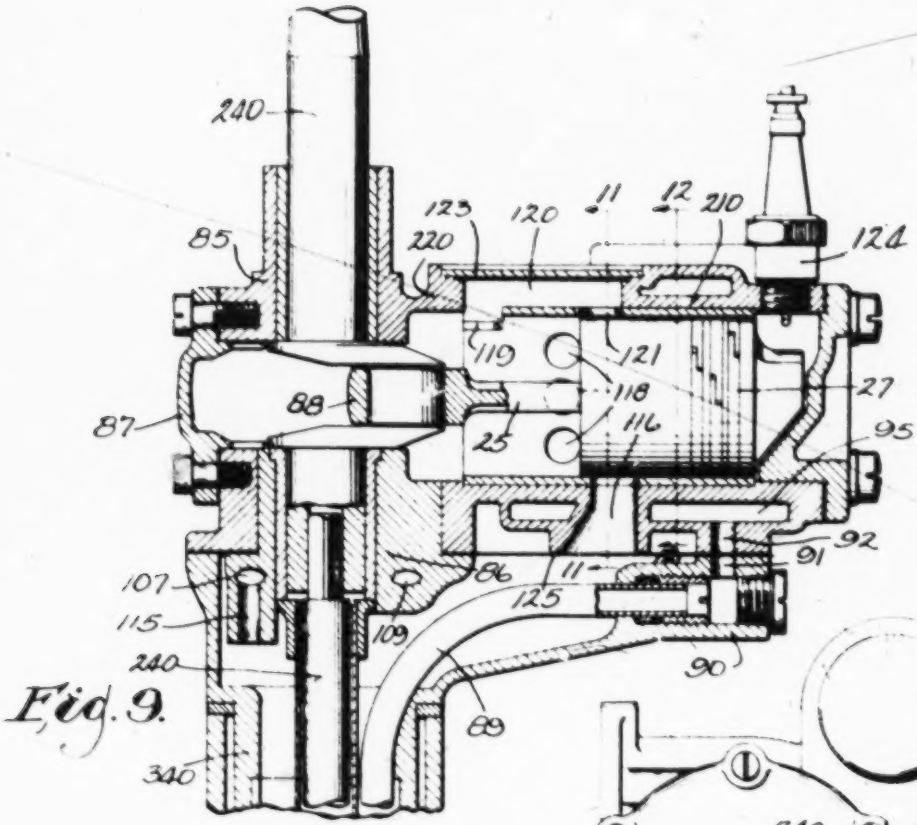

Fig. 9.

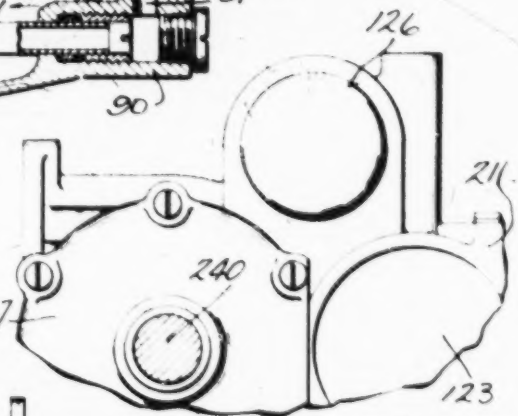

Fig. 16.

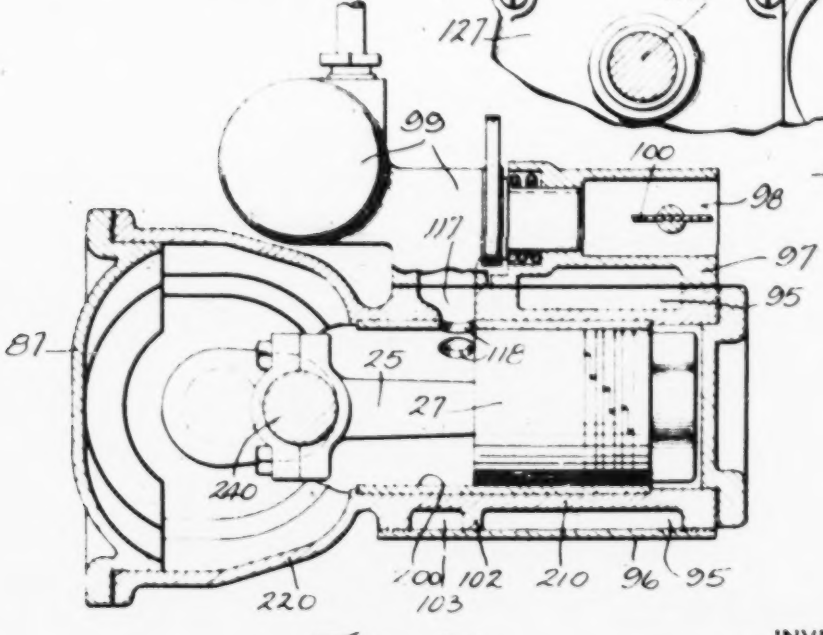

Fig. 10.

INVENTOR
WARREN C CONOVER
BY
Wheeler, Wheeler & Wheeler
ATTORNEYS

Dec. 31, 1940. W. C. CONOVER 2,227,247

ENGINE

Filed Dec. 4, 1939 5 Sheets-Sheet 4

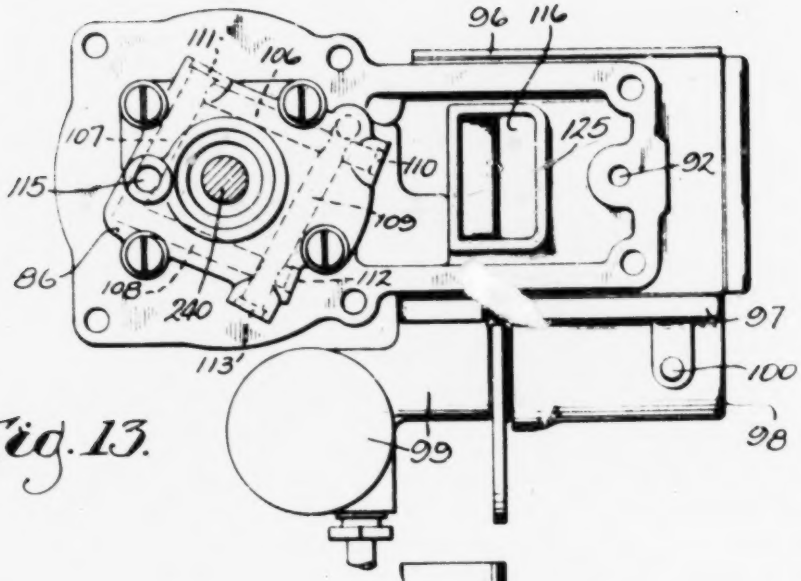

Fig. 13.

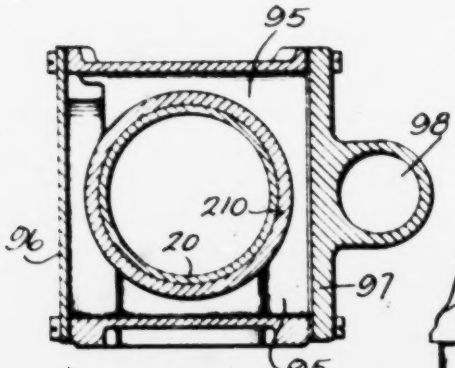

Fig. 12.

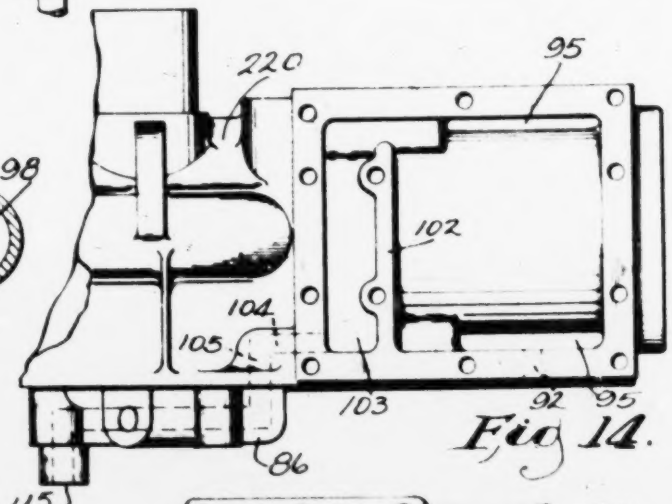

Fig. 14.

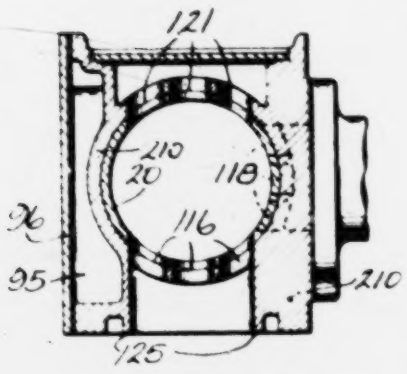

Fig. 11.

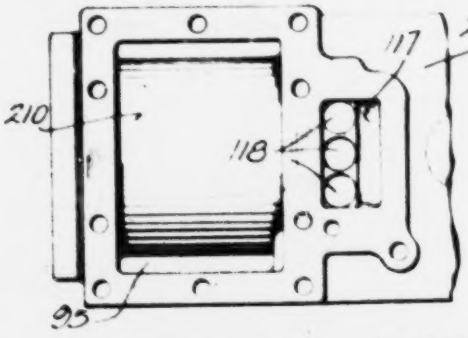

Fig. 15.

INVENTOR
WARREN C CONOVER

BY
Wheeler, Wheeler & Wheeler
ATTORNEYS

P 305

Dec. 31, 1940. W. C. CONOVER 2,227,247

ENGINE

Filed Dec. 4, 1939 5 Sheets-Sheet 5

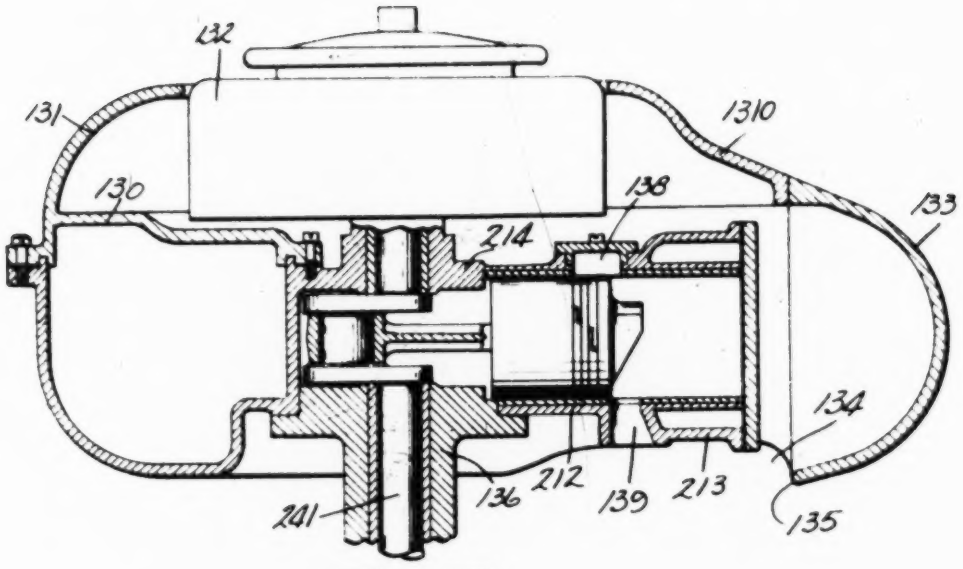

Fig. 17.

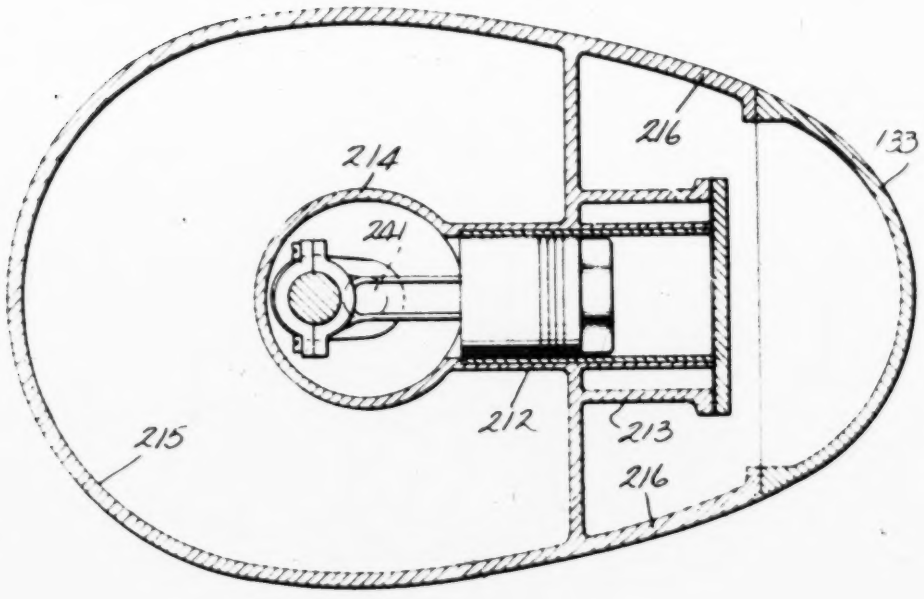

Fig. 18.

INVENTOR
WARREN C CONOVER
BY
Wheeler, Wheeler & Wheeler
ATTORNEYS

Patented Dec. 31, 1940 2,227,247

UNITED STATES PATENT OFFICE

2,227,247

ENGINE

Warren C. Conover, Waukegan, Ill., assignor to Outboard, Marine & Manufacturing Company, Waukegan, Ill., a corporation of Delaware

Application December 4, 1939, Serial No. 307,443

22 Claims. (Cl. 123—173)

This invention relates to improvements in engines.

Generically, it is the primary object of the present invention to provide novel and improved engine constructions with particular reference to the location and formation of cores, passages and jackets to facilitate the die casting of the engine cylinder and crank case structure. In this connection, it is a major purpose to provide for the die casting of most of the cylinder blocks and crank cases in single operations, whereby in each engine so cast the cylinder block and half or more than half of the crank case are preferably made in one piece, not only to reduce assembly costs but to assure perfect alignment.

More specifically, the present invention includes among its various objects the provision of means whereby a core for the transfer passage may be withdrawn through clearance provided in the crank case; to provide novel and improved arrangement and disposition of drilled holes constituting transfer and fuel admission ports; to provide novel and improved arrangements of water jackets to facilitate coring in the construction of a die cast engine; to provide a die cast engine wherein the die cast material is compacted under pressure upon a cylinder sleeve incorporated as being inserted in the die cast; to provide novel and improved arrangements for carburetion including an integral unitary organization of fuel tank, crank case, and engine cylinder block in which the principal portions of these various devices are die cast in a single piece; the provision of a novel organization of mixture, inlet and exhaust passages whereby such passages are formed partially in a cylinder block casting and partially in a separate casting and partially by an intervening plate partition; the provision of novel water passage openings to facilitate die cast construction and circulation throughout the surfaces to be cooled; together with numerous other objects which will be apparent to those skilled in the art upon study of the following disclosure of the invention.

In the drawings:

Fig. 1 is a vertical axial section through a two cylinder engine organized for alternate firing and embodying the present invention.

Fig. 2 is a view in horizontal section through the engine on the center line 2—2 of Fig. 1 of the upper cylinder.

Fig. 3 is a side elevation of the engine as it appears with the inlet and exhaust ports exposed by the removal of a die casting providing inlet and exhaust passages.

Fig. 4 is an end elevation of the engine as it appears with the cylinder head removed.

Fig. 5 is a view of the inlet and exhaust casting showing the inner face applicable to the facing illustrated in Fig. 3.

Fig. 6 is a side elevation of the plate which intervenes between the casting as shown in Fig. 3 and Fig. 5.

Fig. 7 is a view in elevation of the interior face of the cylinder head as it appears when removed from the cylinder block shown in Fig. 4.

Fig. 8 is a view in elevation of the gasket which intervenes between the die casting as shown in Figs. 4 and 7.

Fig. 9 is a view in vertical axial section through a single cylinder engine embodying the invention.

Fig. 10 is a view of the same engine as it appears in a section taken horizontally in the plane of the cylinder axis.

Fig. 11 is a view taken in section in the plane indicated at 11—11 in Fig. 9.

Fig. 12 is a view taken in section in the plane indicated by the line 12—12 in Fig. 9.

Fig. 13 is a bottom plan view of the engine shown in Fig. 9 as it appears when removed from its support on the shaft housing.

Fig. 14 is a view of the cylinder block casting of the same engine in side elevation with one of its side cover plates removed to expose the jacket.

Fig. 15 is a view in side elevation of the opposite side of the cylinder block casting of the same engine with its side cover plate removed to expose the jacket.

Fig. 16 is a plan view showing a fragment of an engine structure slightly modified from the disclosure of Fig. 10.

Fig. 17 is a view in vertical axial section through a further modified single cylinder engine embodying the invention.

Fig. 18 is a view in horizontal section in the plane of the cylinder axis of the engine shown in Fig. 17.

Like parts are identified by the same reference characters throughout the several views.

The engine shown in Figs. 1 to 8, inclusive, on the first two sheets of drawings will first be described. A sleeve 20 of iron or other suitable material is cast as an insert into a single die casting unitarily providing the dual cylinder block 21 and that half portion 22 of the crank case which is contiguous to the cylinders. The other half 23 of the crank case is removably bolted to crank case portion 22 to afford access to the crank shaft 24 and connecting rods 25.

The cylinder head 26 comprises a separate die casting unitarily closing the ends of both of the cylinders to receive the compression of the pistons 27 reciprocable therein. As clearly shown in Figs. 1, 2 and 4, the single die casting which provides the cylinders is made to provide also a jacket wall 28 within which there is a jacket space or water passage 29 which, as indicated in Fig. 1 and Fig. 4, is relatively deep along the top and bottom surfaces of the cylinders and, as shown in Figs. 2 and 4, is relatively shallow, as measured from the cylinder head, at the opposite sides of the cylinders where the various ports are provided as hereinafter to be described.

The die casting 26 which provides the cylinder head is likewise formed with a jacket to provide a jacket space or water passage 30 as indicated in Figs. 1, 2 and 7. In order that the cylinder head may reach a higher temperature than the cylinders, communication between the water passages 29 of casting 21 and the water passages 30 of casting 26 is preferably materially restricted by the intervening gasket 32 which, as shown in Fig. 8, has relatively small openings 33 which may conveniently be arranged in pairs at spaced intervals to permit water to flow from the cylinder jacket space to the jacket space of the head.

Assuming that the engine is used on an outboard motor and is mounted on the shaft housing 34 of such a motor, the water supply may be led upwardly through the shaft housing and delivered to the channel 35 which surrounds the lower crank shaft bearing, being formed partly in the crank case casting 23 and partly in the casting portion 22 of the cylinder block. As explained in companion application No. 212,078, the admission of cooling water about this bearing serves to protect the bearing from the direct heat of the exhaust which is led below the water line through passage 36 formed in the upper end of the shaft housing in a manner hereinafter to be explained. From channel 35, the cooling water passes through a cooling passage in a cover casting which provides an expansion chamber and intake manifold as hereinafter described. From this passage, the water returns to the lower part of the jacket space 29 in a manner which will also be described hereinafter. There may, however, be some small amount of flow through a very restricted opening 37 (Fig. 1) which affords direct communication between channel 35 and jacket 29 primarily for the purpose of drainage.

The water admitted to the jacket must completely fill the jacket space 29 about both cylinders and the jacket space 30 about the heads of the cylinders before it can escape. The only outlet for the cooling water is through the vertical duct 38 cast into the cylinder head casting 26 and opening from the jacket space 30 at 39 (Fig. 1) downwardly across the ends of the cylinder heads. This duct opens outwardly at 40 and the water may either be discharged at that point or led by a suitable pipe to any desired place of discharge. In actual practice, there is a pipe (not shown) which returns the water to the exhaust passage to cool the exhaust gases.

The spark plugs 41 are offset laterally from the duct 38 as shown in Fig. 2. They are preferably completely enclosed by a shell 42 which fits tightly to the cylinder head die casting 26 to exclude moisture from the spark plugs. As shown in Fig. 1, this same shell is preferably provided unitarily with arms 43 projecting downwardly and connected by a transverse handle 44 to facilitate the manipulation not only of the engine, but of the outboard motor structure as a whole.

The die cast block in which the engine cylinders are formed is provided with a hollow downward extension at 45 opening at 46 in the direction of the crank shaft 24 to afford communication with the exhaust passage 36 of the shaft housing 34 of the outboard motor. The interior of the hollow extension 45 communicates with a manifold passage 46 which takes the form of a cavity exposed at the side of die casting 21 and formed by the laterally projecting walls 47 and 48. The wall 49 is a partition between the manifold cavity 46 and the separate cavities 49 and 50 through which the combustible mixture is supplied to the engine. Obviously, the cavities 46, 49 and 50 can conveniently be provided for by a laterally retractible core means.

The laterally upstanding walls about the cavities 46, 49 and 50 are finished to a common plane to receive a partition plate 55 (Figs. 2 and 6) and a die casting 56 which unitarily provides an expansion chamber 57, a jacket space 58 and a pair of passages 59 and 60 through which the carburetor 61 supplies combustible mixture to the cavities 49 and 50 of the die casting 21. Die casting 56 is best illustrated in Figs. 2 and 5. The plate 55 has an opening 62 registering with passage 59 and cavity 50 and a similar opening 63 registering with passage 60 and cavity 49 to afford communication for the flow of combustible mixture to the admission ports 64 of the upper cylinder and the admission ports 65 of the lower cylinder, respectively.

A large opening 66 in the plate 55 affords virtually unrestricted communication between the exhaust passage cavity 46 of the cylinder die casting 21 and the expansion chamber cavity 57 of the separate die casting 56. However, because the partition 68 between the expansion chamber 57 and the jacket space 58 in the auxiliary die casting 56 is offset from the partition 48 between the exhaust cavity 46 and the inlet space 50 of cylinder casting 21, that portion of plate 55 which extends between partitions 48 and 68, as shown in Fig. 2, is imperforate.

The jacket space 58 of die casting 56 is supplied with cooling water by a system which is in series with a portion of the main cooling system already described.

From the channel 35 about the lower crank shaft bearing in castings 21 and 23, a hole 69 (Fig. 3) is drilled in such a way as to open at the surface of the wall 47 to communicate with a hole 70 (Fig. 6) in the plate 55 which leads to the portion 71 of the lower end of the jacket space 58 in the cover casting 56. Thus, the water in jacket space 58 cools the hot gases in chamber 57. As the water level rises to the top of jacket space 58, it is permitted to pass from said space through the hole 72 in plate 55 (Fig. 6) and to enter the registering hole 73 in the cylinder casting 21 (Fig. 3), passing thence downwardly through the hole 75 (Figs. 2 and 3) to an inclined hole 76 (Fig. 3) which returns the water back to the main jacket space 29. In order to drill the inclined hole 76, it is necessary to enter the casting through the exposed face shown in Fig. 3, but this is covered by the imperforate area 77 of plate 55 (Fig. 6) so that the hole 76 affords communication only between the vertical hole 75 and the main jacket 29 to which the water is returned.

The mixture supplied by carburetor 81 and entering the cylinders through ports 84 and 85 in the manner described, reaches the cylinders below the pistons therein and is compressed in the respective crank cases for delivery through the transfer passages 80 at the sides of the cylinders, one of which is shown in Fig. 2. It will be noted that this transfer passage has an unobstructed side wall opening parallel to the axis of the cylinder so that in the die casting of the part 21 the core, which makes the transfer passage, can be withdrawn endwise from the casting. At its outer end, the transfer passage 80 communicates with the transfer port 81 which is bored through the cylinder sleeve 20 and through the adjacent portions of casting 21. This boring is done from the opposite side of the cylinder at an appropriate angle from the exhaust manifold passage 46 to provide the exhaust ports 82 and 83. In each cylinder, three such ports are provided, as shown in Fig. 3, the central port being of larger diameter than the two side ports because it enters the cylinder on a major diameter of the cylinder and, therefore, has less cross sectional area in proportion to the diameter of the hole than do the ports 82 which enter the cylinder on minor chords thereof. The fact that the several ports are bored somewhat obliquely with reference to the axis of the cylinder locates the exhaust ports slightly nearer the cylinder heads than are the transfer ports 81, thus enabling the exhaust ports to open earlier and close later than the transfer ports in accordance with approved practice.

The construction shown in Figs. 9 to 15 on sheets 3 and 4 of the drawings will now be described. While the device illustrated is a single cylinder engine, the manner in which the passages open to facilitate coring may be adapted to engines of the type shown in Figs. 1 and 2. Similarly, the arrangement of the water passages shown in Figs. 1 and 2 is also adaptable to the single cylinder construction now to be described.

As in the previously described construction, it is preferred to die cast in one piece under pressure about a cylinder sleeve 20 a single casting unitarily providing a cylinder portion 210 and a crank case portion 220. In this instance, the crank case portion 220 includes the whole of the upper crank shaft bearing 85. The lower crank shaft bearing 86 is provided by a separate part and a removable enclosure plate 87 affords access to the bearing cap 88 of the connecting rod 25, which is operated by piston 27 in the conventional way. In this device, the water supply carried up the shaft housing 340 in a tube 89 is delivered into the casting 90 which serves as a motor support at the upper end of the shaft housing and thence passes through a hole 91 in casting 90 and a registering hole 92 in casting 210 into the jacket space 95 which completely surrounds the cylinder but, instead of opening to the end of casting 210, opens toward both sides thereof as is clearly shown in Figs. 10, 12, 14 and 15. At each side of casting 210, finished planiform surfaces are provided to receive cover plates for completing the enclosure of the water jacket space. The cover plate 96 (Figs. 10, 11 and 12) performs no function other than to close the jacket space. The closure 97, however, at the other side of casting 210, can conveniently be made to provide the air inlet passage 98 to the carburetor 99 and to serve as a mounting for the choke valve 100 (Fig. 10).

The water admitted through the hole 92 into the jacket space 95 rises to a level substantially filling the jacket space before it overflows the partition 102 which constitutes a dam extending between the closure 96 and the main cylinder block casting 210 and preferably constituting a part of the cylinder block casting as shown in Fig. 14. Having overflowed the top of partition 102, the water passes downwardly along the inner end of the cylinder to the bottom of the well 103 where a pair of holes 104 and 105 communicating at right angles lead the water into the bearing casting 86.

This casting, which provides the lower bearing for crank shaft 340, is provided with water passages communicating at the corners of a substantially square figure surrounding the bearing to keep the bearing cool. These passages 106, 107, 108 and 109, which are either drilled or cored, communicate with the exterior of the casting, being cut off by plugging the passages at 110, 111, 112 and 113, respectively. The hole 105 is intersected by the end of passage 109 closely adjacent to the point of intersection between passages 106 and 109 at one corner of the square. The water passes in both directions around the square through passages 106 and 109 to passages 107 and 108 and the discharge is effected through an outlet hole 115 opening from passage 107 (Figs. 9 and 13). Thus, the lower crank shaft bearing is cooled by the water leaving, rather than entering, the engine. The discharge water flows directly into the upper end of the shaft housing 340 where it mingles with the exhaust gas delivered into the shaft housing through the engine carrying fixture 90 from the exhaust port 116.

The combustible mixture supplied by the carburetor 99 enters the cylinder below piston 27 through the passage 117 with which the carburetor registers, such passage leading to a series of inlet ports 118 (Figs. 10 and 15). After being compressed in the crank case, the charge is transferred through port 119 in the wall of cylinder sleeve 200 into a transfer passage 120 which is round in side elevation and is formed by coring out the side of the main casting 210. The port 119 opens into the side of this cavity which is closest to the inner end of the cylinder. From the side of cavity 120 which is nearest the outer end of the cylinder, a series of ports 121 (Figs. 9 to 11) open through the sleeve 200 to the interior of the cylinder to be uncovered by the piston at the end of its expansion stroke. Ports 121 are opposite the exhaust ports 116 and may conveniently be made in a single operation by drilling from the open cavity 120 completely across the cylinder to intersect both sides thereof. By drilling these holes at a slight angle, the exhaust ports 116 may be located nearer the cylinder head than the transfer ports 121, thus causing the exhaust ports to be first uncovered by the piston during the expansion stroke and last covered on the compression stroke. The cavity 120 which serves as a transfer port and also affords access for the drilling of ports 119, 121 and 116 is closed by a disk-like plug 123 pressed into place against a suitable shoulder.

This engine illustrates one way in which the spark plug 124 may be located at the side rather than the end of the cylinder head.

Because this engine is illustrated in an outboard motor structure and it is desired to prevent the return flow into the cylinder of the cooling water which is discharged into the path of the exhaust in the upper end of shaft housing 340, the principal casting 210 comprising the cylinder block and crank case is provided about

the exhaust support 116 with an annular flange 126 (Figs. 9 and 11) which serves as a dam. As illustrated, this dam has sufficient height so that, regardless of the position of the motor, and even if it should be completely inverted, any water normally present in the shaft housing and tending, by reason of the inversion of the motor, to follow the exhaust gas passages, would be prevented from entering the channel 116 leading to the cylinder.

The construction shown in Fig. 16 is, in general, similar to that disclosed in Figs. 9 to 15, inclusive, except that the carburetor casing 126 is, in this structure, cast integrally with the cylinder block casting 211. This drawing further illustrates the possibility that the top bearing for the crank shaft 240 may be provided by a separable crank case member 127.

Figs. 17 and 18 do not go into detail with regard to water passages or passages for the admission or transfer of the combustible charge. The purpose in Figs. 17 and 18 is to disclose an arrangement in which a single casting, preferably made by die casting, includes the engine cylinder 212, its jacket 213, the top and side walls of the crank case 214, the fuel tank 215 and flanges 216, which provide fairing along the sides of the cylinder. Upon the fuel tank 215 is mounted another die casting which unitarily comprises a cover 130 for the fuel tank and the front shroud 131 for the fly wheel 132. Applied to the fairing 216 at the rear of the cylinder is a spark plug cover shell 133, the interior of which communicates with the shroud to receive the blast of air centrifugally established by the rotation of the fly wheel, such blast being discharged across the end of the cylinder through an opening at 134 in shell 133. The margin of this opening is rounded at 135 to serve as a carrying handle.

An intermediate shroud section 1310 extends from the front shroud 131 to the cover shell 133 and may be cast integral with fairing flanges 216.

The crank shaft 241 upon which fly wheel 132 is mounted, has its lower bearing in a removable closure 136 fitted to the lower end of the crank case. The bearing sleeve will ordinarily be extended to comprise a housing for the extension of the crank shaft 241 in an outboard motor structure, but it may be otherwise designed for other uses. It will be apparent that the fuel itself surrounds the sides of the entire end of the cylinder and the construction provides an extremely inexpensive and simplified way of constructing a light motor with comparatively few parts requiring assembly. As viewed in Fig. 17, the core used in forming the crank case is withdrawn downwardly, the core used in forming the fuel tank is withdrawn upwardly and the core used in forming the cylinder and its jacket space may be withdrawn endwise of the cylinder. The core used to form the transfer passage 138 and that used to form the exhaust passage 139 are withdrawn upwardly and downwardly, respectively.

In each of the several constructions illustrated, the main or principal casting comprises the engine cylinder block and at least a portion of the crank case and is die cast under pressure upon the sleeve-like insert which constitutes the cylinder lining. In the construction first described, the crank case is supported upon a transverse plane including the axis of the crank shaft and the core means forming that portion of the crank case included in the aforesaid casting, is withdrawn axially of the cylinder, along with the core means which form the transfer port. The core means forming the support for the cylinder sleeve and the core means forming the jacket portion of the main casting are withdrawn in the opposite direction upon the same axis. The other core means withdrawn laterally provide passages for gas and give access to the portions of the principal casting in which the ports are to be drilled through the casting and the liner sleeve.

In the constructions shown on Sheets 2 to 5 of the drawings, the ports are also arranged for the withdrawal in directions lateral with respect to the cylinder axis of the core means which form the respective passages for gas and which give access to the points where the ports are drilled into the principal casting.

In each of the constructions shown in Figs. 1 to 4, the closures applied over the cavities formed in the aforesaid corresponding operations perform additional functions in the support of ancillary equipment, such as the carburetor, or in the provision of supplemental passages and chambers.

In each of the structures shown on Sheet 1 and Sheet 5, the spark plug cover is made not only to protect the spark plug but to provide a lifting handle for convenient manipulation of the engine and the outboard motor of which it may be part.

With particular reference to the construction shown in Figs. 1 to 8, inclusive, cylinder distortion is substantially eliminated by locating the holding screws for the cylinder head on the water jacket rather than the cylinder proper. In the construction shown in Fig. 9, the cylinder is extended sufficiently beyond the piston travel to receive the screws at a point where there is no piston bearing. In this construction, also, therefore, the portion of the cylinder traversed by the piston is free of distortion.

I claim:

1. In an engine having a crank case, cylinder and jacket, the combination in a single casting of a crank case portion having a hollow interior with walls progressively and unobstructedly opening outwardly, a cylinder portion having a hollow cylindrical interior with walls unobstructedly opening outwardly, and a jacket spaced from said cylinder portion to provide a hollow cavity for coolant with walls progressively and unobstructedly opening outwardly, whereby each of said cavities is adapted to be formed by a die in a die casting operation.

2. In an engine having a crank shaft, crank case, cylinder, and jacket, the crank case comprising two complementary parts to provide an internal cavity and joined substantially in the transverse plane of the crank case, the combination in a single casting of the crank case part adjacent the cylinder, a cylinder block in which the cylinder is provided with a jacket space, said jacket space opening to the end of the cylinder opposite from the crank case with unobstructed wall surfaces adapted to permit of the withdrawal of a die following the formation of said casting in a die casting operation, the crank case portion included in said casting having an extension along the side of said cylinder constituting a transfer passage with unobstructed wall surfaces opening into the cavity of said crank case portion, whereby to be adapted for formation with said crank case cavity by die means withdrawable in a direction generally axial with re-

spect to said cylinder, together with closures for the several cavities in said casting comprising a complementary crank case section for closing the space between the cylinder and the jacket.

3. An engine comprising a block provided with a horizontal cylinder and a jacket cavity about the cylinder, a cylinder head including a closure for said jacket cavity and cylinder, said head having a water passage opening downwardly across said head and communicating with said jacket cavity solely at the top thereof, and means for introducing water into said jacket cavity at the bottom thereof, whereby said cavity is required to fill before water will discharge through said head.

4. The combination with a cylinder block having a cylinder and a jacket space opening to the end of the cylinder block, of a head having a complementary jacket space opening toward the end of the cylinder, said head constituting a closure for the cylinder and a closure for the jacket space, and an intervening gasket plate apertured to provide for restricted communication between the otherwise fully communicating jacket space of the cylinder and the jacket space of the head.

5. The combination with a cylinder block having a cylinder and a jacket space opening to the end of the cylinder block, of a head having a complementary jacket space opening toward the end of the cylinder, said head constituting a closure for the cylinder and a closure for the jacket space, and an intervening gasket plate apertured to provide for restricted communication between the otherwise fully communicating jacket space of the cylinder and the jacket space of the head, said head having no jacketing across the end of the cylinder except a single discharge passage leading from said jacket space and extending substantially diametrically across said head.

6. In a device of the character described, the combination with a cylinder block and head, of a spark plug in the head, a cover for the spark plug secured thereabout, and a handle mounted on the cover for manipulation of said cylinder block.

7. In a device of the character described, the combination with an engine having a cylinder provided with a head, of a spark plug in the head and a spark plug cover comprising a shell closely fitted to said head about said spark plug and formed to provide a carrying handle to facilitate the manipulation of said engine.

8. In a device of the character described, the combination with a casting providing at least one cylinder and a crank case section in integral connection with the end of the cylinder, of a transfer passage having a wall integrally formed in the angle between the crank case portion and cylinder, said passage opening into the crank case portion and extending rectilinearly along the cylinder wall, means at the other side of the cylinder wall from said transfer passage comprising extensions of said wall to constitute intake and exhaust cavities, said cylinder having holes drilled from the respective cavities into the cylinder, certain of said holes being extended across said cylinder into said transfer passage to afford communication between said passage and cylinder, and closure means for said cavities.

9. In an engine, the combination of a cylinder block and a cooling jacket space opening to the same end of the block as the cylinder, the other end of said block being expanded to provide integrally a half section of a crank case, one side of the block being integrally formed to provide a transfer passage opening uninterruptedly into said crank case section and extending along the side of the block, the other side of the block having laterally opening adjacent cavities of substantial depth comprising mixture admission and exhaust cavities respectively, said block having holes affording communication between the transfer passage and the cylinder and between the mixture admission cavity and the cylinder and between the cylinder and the exhaust cavity, said holes between the transfer passage and the cylinder and between the exhaust cavity and the cylinder being axially aligned to permit their formation in a single drilling operation, and closures for the ends and side of said block comprising a crank case section at one end of the block, a cylinder head at the other end of the block including a closure for said jacket space, and a closure for the said cavities, said last mentioned closure being provided both with carburetion means and with an expansion chamber, the latter chamber communicating with the exhaust cavity.

10. In an engine having a vertical crank shaft and horizontally reciprocable pistons in operative connection with the crank shaft, the combination with two crank case parts joined in a transverse plane at the crank shaft to provide upper, lower and intermediate bearings therefor and separate crank cases between the bearings, cylinders in which said pistons are reciprocable, said cylinders being formed in a single cylinder block casting of which the crank case section contiguous thereto is a part, a jacket likewise comprising a part of said casting and spaced from said cylinders to provide a jacket space for coolant about the cylinders, said jacket space and cylinders opening to the end of the casting opposite the crank case, means likewise forming an integral part of said casting providing separate transfer passages opening with unobstructed wall surfaces from the respective crank cases of said crank case section and extending thence along the sides of the respective cylinders, said cylinders being provided with ports opening from said passages into the cylinders, means at the sides of said cylinders opposite said transfer passage means comprising spaced laterally projecting walls defining laterally opening charge inlet cavities individual to the respective cylinders and a single exhaust cavity common to the respective cylinders, the cylinders having ports opening into the respective cavities, said exhaust cavity ports and the oppositely positioned transfer cavity ports being drilled from the exhaust port cavity at an oblique angle to the cylinder walls whereby the transfer port is offset toward said crank case housing, and closure means operatively connected with said casting for the closure of the cylinders, the jacket space and said cavities, the closure means for the charge admission cavity comprising a carbureting device.

11. In an engine having a vertical crank shaft and horizontally reciprocable pistons in operative connection with the crank shaft, the combination with two crank case parts joined in a transverse plane at the crank shaft to provide upper, lower and intermediate bearings therefor and separate crank cases between the bearings, cylinders in which said pistons are reciprocable, said cylinders being formed in a single cylinder-

block casting of which the crank case section contiguous thereto is a part, a jacket likewise comprising a part of said casting and spaced from said cylinders to provide a jacket space for coolant about the cylinders, said jacket space and cylinders opening to the end of the casting opposite the crank case, means likewise forming an integral part of said casting providing separate transfer passages opening with unobstructed wall surfaces from the respective crank cases of said crank case section and extending thence along the sides of the respective cylinders, said cylinders being provided with ports opening from said passages into the cylinders, means at the sides of said cylinders opposite said transfer passage means comprising spaced laterally projecting walls defining laterally opening charge inlet cavities individual to the respective cylinders and a single exhaust cavity common to the respective cylinders, the cylinders having ports opening into the respective cavities, the exhaust ports and the oppositely disposed transfer passage ports being in axial alignment in oblique relation to the cylinder walls, a cylinder head comprising a closure for the respective cylinders and the jacket space about the cylinders, and a closure connected with the side of the casting over said mixture admission cavity and said exhaust cavity and provided in communication with the respective cavities with a carbureting device and an expansion chamber, said last mentioned closure being formed to provide an internal jacket space intervening between the expansion chamber and the carbureting device and communicating with the jacket space of said engine at a plurality of points to afford circulation of coolant.

12. In an engine, the combination with a cylinder having laterally extending walls defining intake and exhaust cavities, said cylinder having port means affording communication with the respective cavities, of a closure plate provided with spaced chambers communicating with the respective cavities and an intervening partition out of registry with the wall means of said cylinder intervening between said cavities, and a plate intervening between said wall means and said closure and provided with apertures affording communication between the respective cavities, said plate having a cover portion spanning the offset between the partition of said closure and the wall of said cylinder intervening between said cavities.

13. A multi-cylinder engine comprising the combination with a crank shaft, connecting rod and pistons, of a crank case comprising two sections joined at said crank shaft and provided with upper, lower and intermediate bearings defining separate crank cases, a cylinder block comprising in a single casting a plurality of separate cylinders and the adjacent crank case section, and transfer means from the respective crank cases to the respective cylinders and jacket means for said cylinders, said cylinder block also having at its side opposite said transfer means charge admission cavities communicating with the respective cylinders and an exhaust manifold cavity communicating with each of said cylinders and providing an exhaust passage common thereto, said casting having laterally projecting wall surfaces and intervening partition means integrally forming said several cavities and being provided with holes opening through one of said wall surfaces from the jacket space of said cylinder within said jacket means at a plurality of points adjacent remote sides of the respective cylinders, and closure means for the several cavities comprising charge forming means communicating with the charge admission cavities of the respective cylinders, expansion chamber means communicating with said manifold cavity and having an intervening jacket space disposed between the charge forming means and the expansion chamber means and communicating through said holes at spaced points with the jacket space of said cylinder block casting.

14. In an engine, the combination with a cylinder block casting including a crank case part integrally providing for one crank shaft bearing and provided with a closure providing for another crank shaft bearing, of jacket means integrally forming a part of said casting and spaced therefrom at opposite sides of the casting, said jacket means having finished lateral surfaces, and an internal cavity opening smoothly and unobstructedly toward said surfaces for the lateral retraction of dies used in the die casting of said cylinder block, together with closures applied laterally to said casting in connection with said jacket means to confine a coolant therein about the cylinder of said casting.

15. In an engine, the combination of a casting integrally providing a cylinder and a jacket space opening smoothly and unobstructedly about said cylinder toward opposite sides thereof to facilitate the retraction of dies used in making said casting, of opposing closures for said jacket space connected with opposite sides of the casting, and a rib integral with said casting and abutted by one of said closures and constituting a flow directing means for controlling the circulation of coolant within the jacket space.

16. In an engine having a die cast cylinder block, the combination with a cylinder casting having cylinder admission and exhaust passages on two sides communicating with the cylinder and having jacket spaces opening oppositely to the other two sides, said jacket spaces and passages having walls smoothly and uninterruptedly opening outwardly from the cylinder to facilitate the withdrawal of dies, and closures applied to the four sides of the cylinder casting in registry with the respective passages and spaces.

17. In an engine, a die cast cylinder block comprising a cylinder, an integral jacket wall spaced from the cylinder at opposite sides thereof, the space between the jacket wall and cylinder opening smoothly and uninterruptedly in opposite directions to the sides of the casting to facilitate the withdrawal of dies used in forming said space, and opposed closures connected to said casting to confine a coolant within the jacket space.

18. In an engine, a die cast cylinder block providing a horizontal cylinder and integral jacket walls connected with said block and spaced upwardly and downwardly from the cylinder to provide a jacket space opening laterally at opposite sides of the cylinder, the casting being approximately rectangular in cross section, and closures applied to said jacket walls at the sides of said block and in spaced relation to said cylinder to confine a coolant about said cylinder.

19. An engine comprising a die-cast cylinder block, having formed integral therewith, a crank case section and a fuel tank section, said fuel tank section having a cavity partially surrounding the crank case section and a lower portion of the cylinder block.

20. In a horizontally disposed engine, the com-

bination with a single die casting uniterily comprising a cylinder block having a laterally opening cylinder cavity, a crank case section having a vertically opening crank case cavity and a fuel tank section having an upwardly opening fuel reservoir cavity, of closures applied to said casting about the several cavities aforesaid.

21. In an engine subject to tilting and having an underwater exhaust, the combination with a cylinder having an exhaust port and an expansion chamber with which the exhaust port communicates, of a flange surrounding said exhaust port and constituting a dam for trapping in the expansion chamber water running through the expansion chamber toward said port.

22. In an engine, the combination with an upright crank shaft and a horizontally reciprocable piston in operative connection therewith, of a cylinder in which said piston is reciprocable, a crank case provided with bearings for the crank shaft, a portion of said crank case being integral with said cylinder, and a fuel reservoir integral with said crank case portion and extending partially about the crank case, a closure for said reservoir, a flywheel on said crank shaft, and a shroud for said flywheel of which at least a portion is mounted on said closure.

WARREN C. CONOVER.

July 15, 1941. K. LÖHNER 2,249,319

DEVICE FOR COOLING AIR-COOLED INTERNAL COMBUSTION ENGINES WITH THE CYLINDERS ARRANGED IN ROWS

Filed Nov. 1, 1938 2 Sheets-Sheet 1

Fig. 1

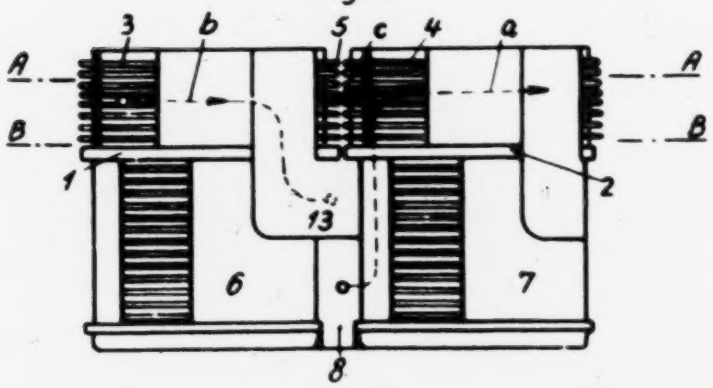

Fig. 2

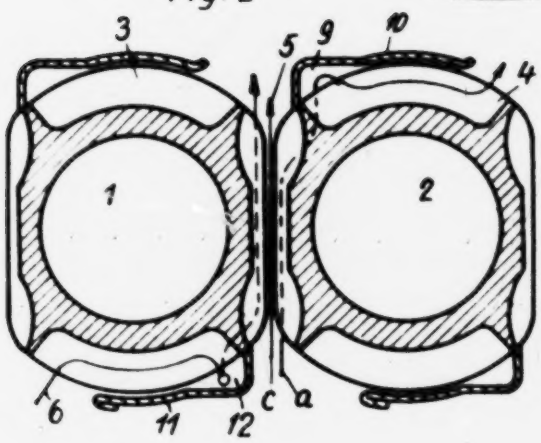

Fig. 4

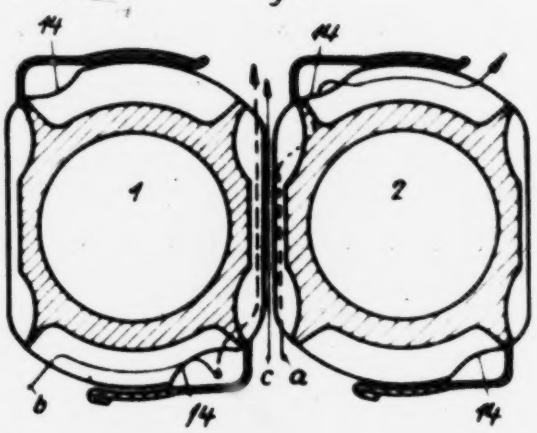

Fig. 3

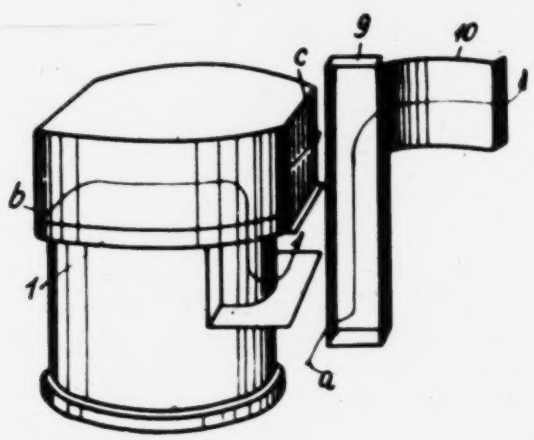

INVENTOR:
KURT LÖHNER
by A. A. Lucke
ATTORNEY

July 15, 1941. K. LÖHNER 2,249,319

DEVICE FOR COOLING AIR-COOLED INTERNAL COMBUSTION ENGINES WITH THE CYLINDERS ARRANGED IN ROWS

Filed Nov. 1, 1938 2 Sheets-Sheet 2

Fig 6

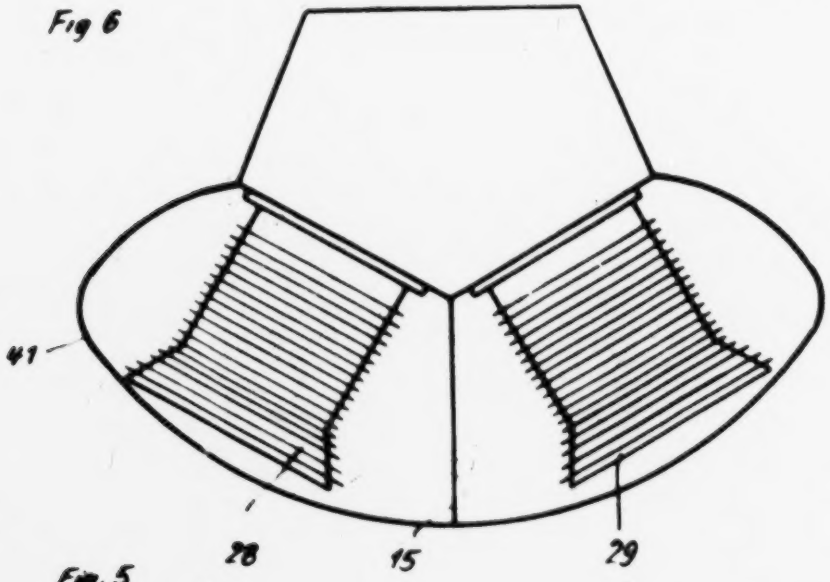

Fig. 5

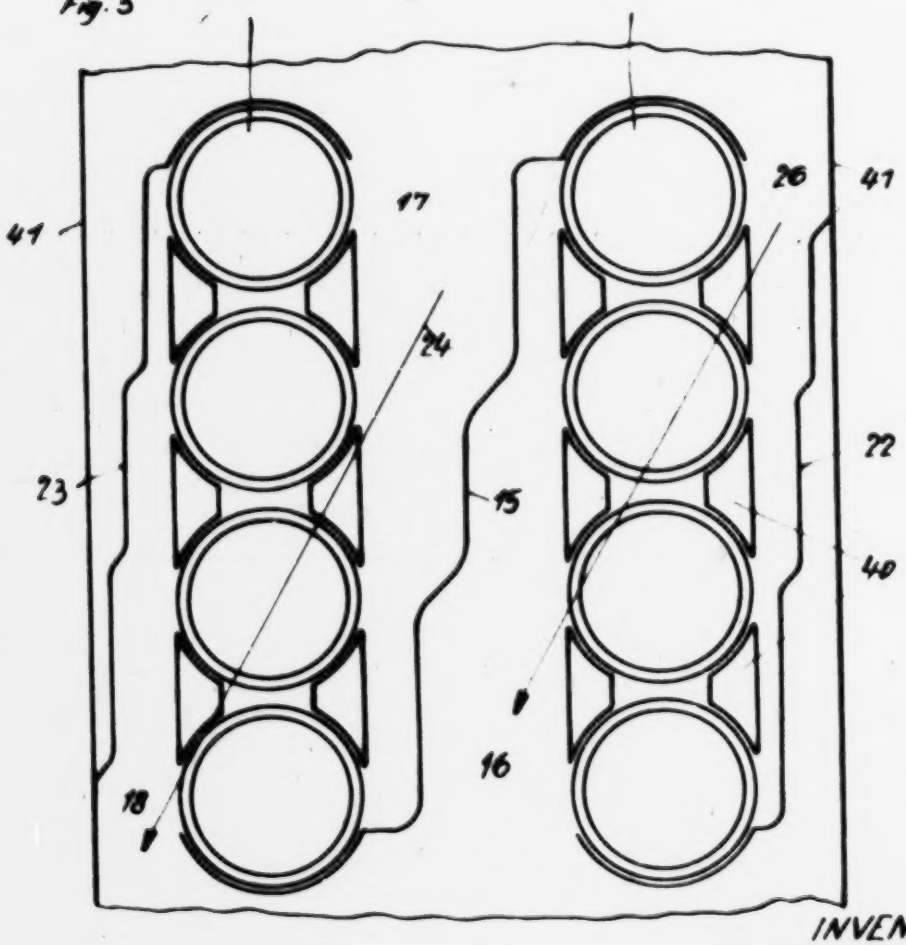

INVENTOR.
KURT LÖHNER
by A. A. Hirsch
ATTORNEY

Patented July 15, 1941 2,249,319

UNITED STATES PATENT OFFICE

2,249,319

DEVICE FOR COOLING AIR-COOLED INTERNAL COMBUSTION ENGINES WITH THE CYLINDERS ARRANGED IN ROWS

Kurt Löhner, Munich, Germany, assignor to the firm: Bayerische Motoren Werke Aktiengesellschaft, Munich, Germany

Application November 1, 1938, Serial No. 238,137
In Germany July 28, 1937

4 Claims. (Cl. 123—171)

The subject of the present invention is an improvement in or modification of the arrangement for cooling air cooled internal combustion engines with the cylinders arranged in rows, and is a continuation-in-part of my co-pending application Serial No. 238,136, filed November 1st, 1938.

According to my above identified prior application, the spaces between adjacent cylinder rows are sub-divided into inflow and outflow spaces by guide plates so that from the partial spaces formed within each cylinder row intermediate space, one serves for guiding the cooling air flowing to the cylinders, and the other for guiding the cooling air flowing from the cylinders. The cooling air in this case passes from one partial space with the inflowing cooling air between the separate cylinders to the other side of the cylinder row into a partial space with outflowing air. A further feature resides in the fact that the cooling air stream of one cylinder row is so divided by dividing plates into a stream passing around the cylinder heads and the stream passing around the cylinder bases that each cylinder row has the cooling air passing over it from two sides in substantially inclined yet approximately parallel main directions of flow intersecting one another along each cylinder row in a plane at right angles to the cylinder row. The advantage of this cooling arrangement is the complete utilisation of the cross-sectional areas between the separate cylinder rows for the inflow and outflow of the cooling air and thus an increase of the effective quantity of cooling air.

The present invention also provides for a complete utilisation of the cross-sectional areas between the separate adjacent cylinders of the same cylinder row for the inflow and outflow of cooling air by a suitable arrangement of guide means.

In the case of air-cooled internal combustion engines with the cylinders arranged in rows, attempts have been made, in order to reduce the length and the weight as much as possible, to arrange the separate cylinders within the row as closely together as possible. In general, greater wall thicknesses and deeper cooling fins are required for the cylinder head, consisting of aluminium, to enable the withdrawal of heat to be carried out and in order to obtain sufficient strength, than for the cylinder running sleeve which consists of steel. The minimum distance between the separate cylinders is therefore determined by the diameter of the cooling fins of the cylinder heads.

For thermo-technical reasons the cooling fins provided on the steel running sleeve are lower than those provided on the aluminium cylinder head. There is thus formed a free space under the cylinder heads which are arranged close to one another, between the cylinder bases of each two adjacent cylinders.

This free cross-sectional area is utilised in accordance with the invention for cooling the cylinder heads. As a result the height of the cooling fins of the cylinder heads at the points at which two cylinders meet is made substantially lower than the height thereof at the sides of the cylinder row, and in this manner there is obtained as compact a construction of the engine as possible.

The utilisation of this free cross-sectional area is effected in accordance with the invention as follows:

The cooling air is supplied from the side to the cylinder row in any suitable manner, for example by means of guide plates, approximately at right angles to the central plane of the cylinder row.

One half of the free cross-sectional area is utilised according to the invention so as to bring fresh air backwardly in a direction looking transversely to the central plane of the cylinder row, where it is conducted upwardly through a flue and from here is guided along the rearward fins of the cylinder head thus cooling these fins.

On the side of the cylinder turned towards the supply side for the cooling air, looking in the same direction as before, that is to say on the front side of the cylinders, the cooling air is guided in the reverse direction. In this case the fresh air is firstly guided along the front fins of the cylinder head. Thereupon it is conducted through a flue downwardly and from here rearwardly through the second half of the free cross-sectional area between the cylinder bases.

In this manner the cooling air, which passes between the cooling fins between two adjacent cylinder heads at the point of connection, only has to cool these cooling fin parts whereby these may be made much lower than usual. At this point the fresh cooling air only flows for a short distance over the cooling fins. Consequently it can take up very many more heat units, and conduct them away, than a cooling air which has already been heated over a long distance.

By guiding the cooling air in accordance with the invention even cooling fins of low height are sufficiently cooled.

Further, in consequence of their low height the distance between these fins may be made ex-

tremely small by forming them for example by milling instead of by casting.

The guide means, which separate the various air streams, also provide an additional cooling surface.

In comparison with the previous state of engine technology, there is obtained, by means of the invention, a considerable improvement in that in the case of air-cooled internal combustion engines with the cylinders arranged in rows, the separate cylinders of each row can be placed very close together and thus the length of the entire engine is considerably shortened. By shortening the length the weight of the engine and thus the very important specific weight of the engine, particularly in connection with air craft engines, is reduced.

These and other features of the invention will be best understood and appreciated from the following description of a preferred embodiment thereof, described for purposes of illustration and shown in the accompanying drawings, in which:

Fig. 1 is a side elevation of two cylinders in a row, embodying the cooling passages and channels formed in accordance with this invention;

Fig. 2 is a cross-sectional view along the line A—A of Fig. 1;

Fig. 3 is a perspective view of one cylinder and part of the air guiding means of the next succeeding cylinder in a row, showing the path of the directed cooling air;

Fig. 4 is a cross-sectional view along the line B—B of Fig. 1;

Fig. 5 is a longitudinal cross-section illustrating the manner in which the oncoming cooling air is laterally directed against the rows of cylinders as originally disclosed in my above identified copending application Serial No. 238,136; and

Fig. 6 is a transverse cross-sectional view taken through Fig. 5.

The present invention is concerned with construction involving the cooling of a plurality of cylinders aligned in one or more rows, including V-engines, radial engines, etc., and in which the cooling air is directed laterally along the rows of cylinders by means such as illustrated by way of example in Figs. 5 and 6 and described in more detail hereinafter. Figs. 1 to 4 inclusive pertain particularly to two adjacent cylinders of a row to be cooled, said cylinders being provided with enlarged head portions having cooling fins 3 and 4 of normal size along their outer edges, and narrower cooling fins 5 in between them, whereby the cylinders may be positioned much closer to one another than in the usual case. This advantageous construction, is brought about in a manner to be explained hereinafter, without any resultant loss in effective cooling of the cylinder head.

Since the cylinder bases 6 and 7 are of smaller diameter than the cylinder heads, there remains between them an open space 8. By suitable attached means forming a flue 9 and guiding plate 10, the stream of air a directed laterally against the lower portion of the open space 8, is guided upwardly on the far side of the second cylinder 2 and then forwardly through the cooling fins 4 on the far side of this cylinder head. By this means, and by similar means positioned on all of the cylinders of the row, effective cooling of this side of the cylinder heads is in all cases assured.

By means of a second guiding plate 7 and a downwardly guiding flue 12 another part of the laterally directed cooling air stream b is used for cooling the near side of the cylinder head. The air after being heated by contact with the cooling fin which is on the near side of the cylinder head, is guided downwardly by the flue 12 and then the heated air passes through the upper portion 13 of the space between the cylinder bases. It will be thus seen that the space between the cylinder bases which otherwise would not be fully used is effectively entirely utilized for cooling the far and near sides of the cylinder head. This leaves the third part of the laterally directed air stream c for solely cooling the cylinder head along the part intermediate adjacent cylinders. Since this cooling stream c is used for no other purpose and is not heated to a material extent before contact with the cooling fin 5 a very effective and efficient cooling is obtained at this point. Because of the effectiveness of the above described cooling arrangement, the fins 5 may be made smaller, thus permitting a closer mounting of the cylinders, thereby in turn reducing the effective length of the engine.

In order to maintain a full constant cross-sectional area within the flues 9 and 12, the cooling fins 3 and 4 of the cylinder heads may be bent or cut away at an angle at these points, as is best shown in Fig. 4, where the reference numeral 14 shows the cut-away portion.

The cylinder bases are enclosed in regular jacket guide plates, which, however, in no manner interfere with the aforedescribed arrangement for cooling the cylinder heads. The cooling fins 5 between adjacent cylinders may be formed in any well known manner, and, due to their small side, may merely be grooves which have been milled or otherwise cut into these parts of the cylinder heads.

The manner of attaching the various guiding means 9, 10, 11 and 12 is of no particular importance with respect to this invention. They may be either produced in the usual manner from sheet metal, or may be applied as cast, machined or un-machined parts of the cylinder.

As the means for directing the air laterally against the sides of the cylinder rows, the construction illustrated in Figs. 5 and 6 may be used. This construction was originally disclosed and described in my aforesaid co-pending application. As is there illustrated, the space between the cylinder rows 28 and 29 is divided by a guide plate 15 into two partial spaces 16 and 17, the one space 17 serving for directing the air laterally against the cylinder row 28, while the space 16 is used for conducting the air away from the cylinder row 29. The invention has been illustrated as applied to a V-engine of two cylinder rows, which are covered by a general casing member 41. Additional guide plates positioned between the cylinder rows and the casing are illustrated at 22 and 23. The guide plate 22 directs the air 26 laterally against the cylinder row 29, while the guide plate 23 forms a partial space 18 to conduct the heated air 24 away from the cylinder row 28. If the principles of the present invention are applied to the construction illustrated in Figs. 5 and 6, the means illustrated at 40 for guiding the air about the cylinders will be replaced by the guiding means of the present invention. In the case of a radial engine, the outer casing member 41 will not be present, and the guiding means between the heated row of cylinders will be formed similarly to the guiding

plate 15. It is pointed out, however, that the principles of the present invention are not intended to be limited for use in connection with the arrangements illustrated in Figs. 5 and 6, but will be applicable to any arrangement wherein means are provided for laterally directing cooling air against the rows of multiple cylinders.

Having now thus described the invention, and the specific embodiment thereof, as well as the function and mode of operation of the same, what I claim as new and desire to secure by Letters Patent of the United States is:

1. In an internal combustion engine of the class provided with rows of more than one cylinder each, said cylinders being each provided with a finned base portion, an enlarged finned head portion, and means for directing cooling air laterally against a row of cylinders, the combination of a first guide means on each cylinder head for guiding said directed air along one side of said head, and then downwardly and transversely through a portion of the space between the cylinder bases, and second guide means for conducting the cooling air flowing through the remaining portion of the space between the cylinder bases upwardly and forwardly along the opposite side of the head of the next cylinder, whereby the air directed laterally between adjacent cylinder heads is utilized entirely for cooling these cylinder head sides.

2. The combination according to claim 1, in which the cooling fins on the cylinder heads between adjacent cylinders of the same row are shorter than those on the sides of the cylinders.

3. In an internal combustion engine of the class provided with rows of more than one cylinder each, said cylinders being each provided with a finned base portion, an enlarged finned head portion, and means for directing cooling air laterally against a row of cylinders, the combination of a first guide plate and connecting flue for receiving the laterally directed air, guiding it forwardly along the near side of one cylinder head and then downwardly and transversely through a portion of the space between the cylinder bases, and a second flue and guiding plate for receiving the laterally directed cooling air through the remaining space between the cylinder bases, and thence guiding it upwardly and forwardly along the far side of the next cylinder head, whereby the laterally directed air between adjacent cylinder heads is used entirely for cooling said head along the transverse sides thereof.

4. The combination according to claim 3, in which the fins on the cylinders within the flues are inclined in such a manner as to maintain a constant cross-sectional area throughout said flues.

KURT LÖHNER.

Sept. 16, 1941. J. MOLNAR 2,256,002

TOY AIRPLANE MOTOR

Filed May 2, 1940 2 Sheets-Sheet 1

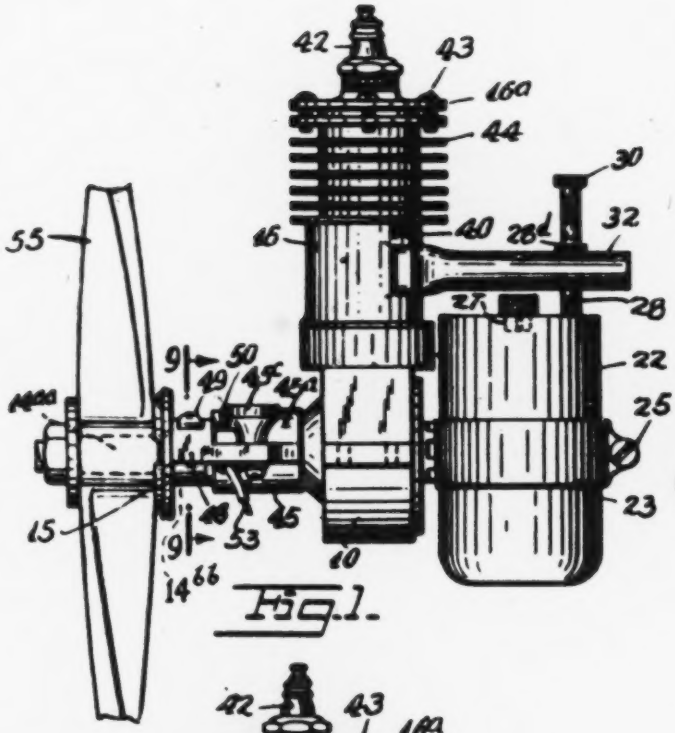

Fig. 1.

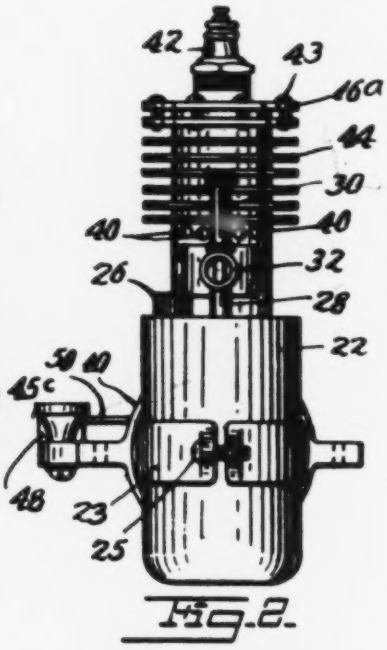

Fig. 2.

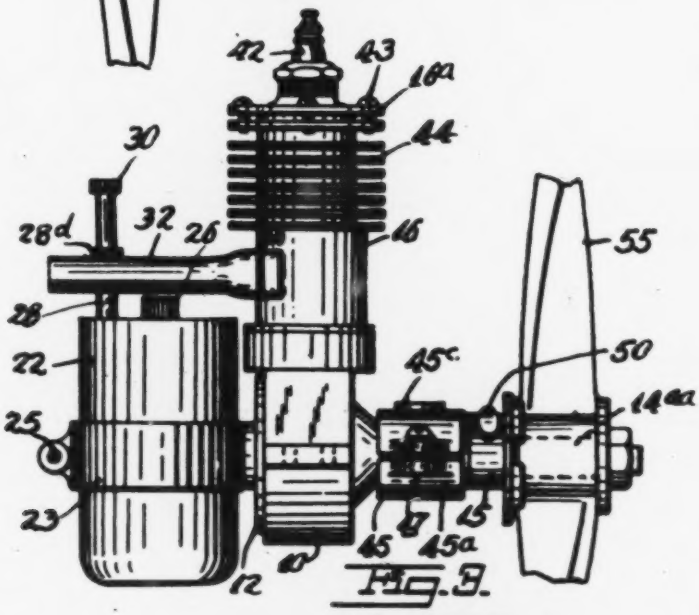

Fig. 3.

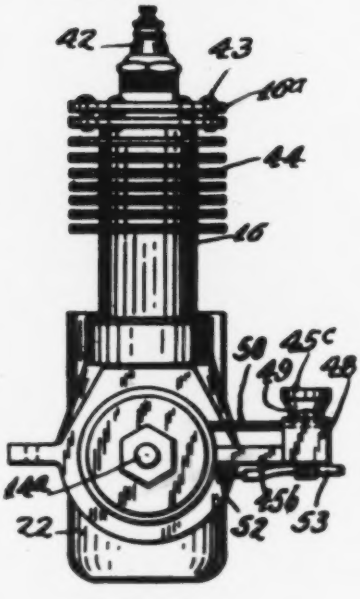

Fig. 4.

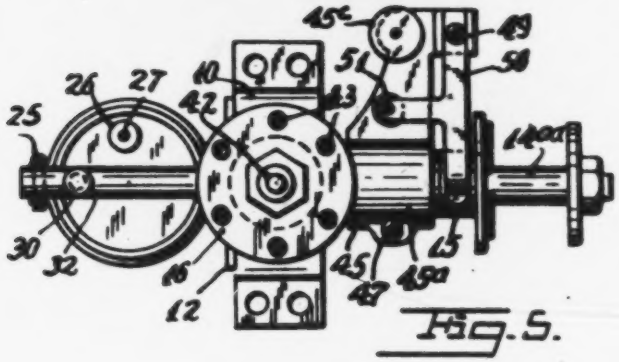

Fig. 5.

INVENTOR
Joseph Molnar
BY
ATTORNEY

Sept. 16, 1941. J. MOLNAR 2,256,002

TOY AIRPLANE MOTOR

Filed May 2, 1940 2 Sheets-Sheet 2

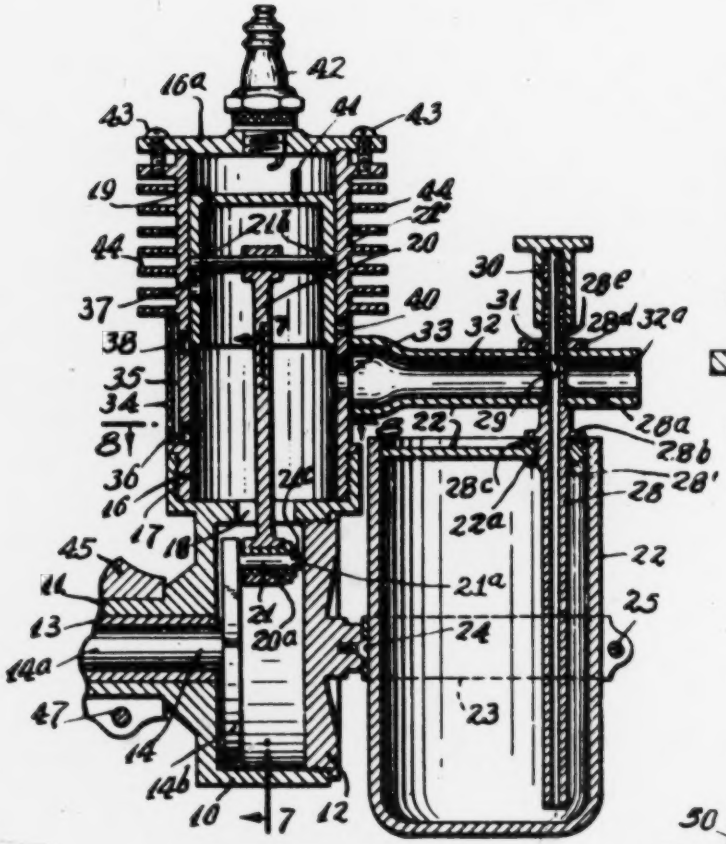

Fig. 6.

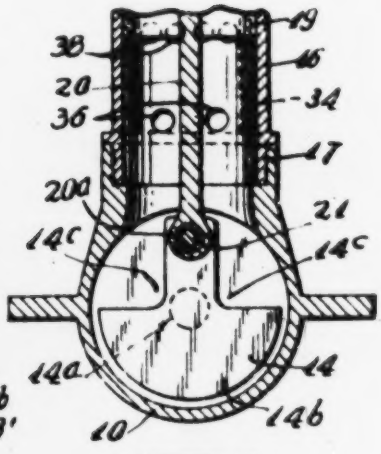

Fig. 7.

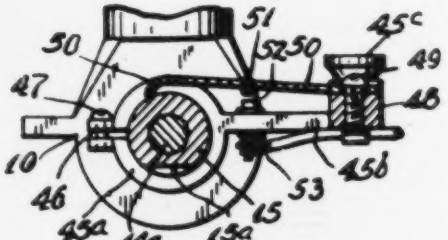

Fig. 9.

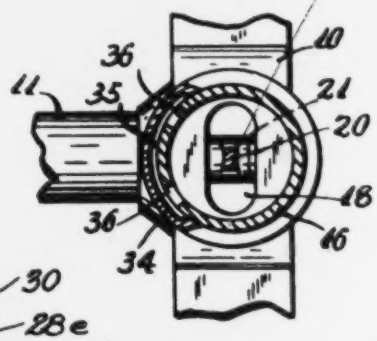

Fig. 8.

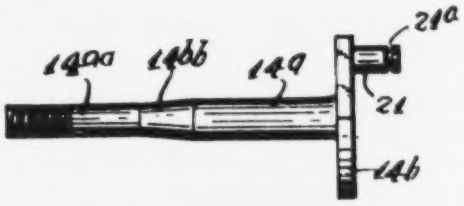

Fig. 10.

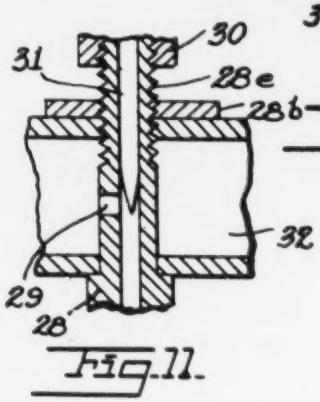

Fig. 11.

INVENTOR
Joseph Molnar
BY
ATTORNEY

Patented Sept. 16, 1941

2,256,002

UNITED STATES PATENT OFFICE

2,256,002

TOY AIRPLANE MOTOR

Joseph Molnar, Trenton, N. J.

Application May 2, 1940, Serial No. 332,936

3 Claims. (Cl. 123—73)

This invention relates to new and useful improvements in a toy airplane motor.

The invention has for an object the construction of a toy airplane motor adapted to be operated by gasoline or similar fuels and constructed in an extremely simple manner.

More specifically, the invention proposes to characterize the toy airplane motor by an air tight crankcase having a tubular member on one side through which the crank shaft is rotatively supported, and an arrangement whereby the incoming fuel is sucked into the crankcase to be better carbureted.

The invention also proposes a carburetor comprising an air intake tube through which a fuel tube controlled by a needle nozzle is passed to supply air and fuel to a port formed in the side of a cylinder for the motor.

Still further the invention contemplates arranging the cylinder of the motor in a particular manner and associating it with the crankcase and carburetor device in an extremely simple fashion.

Still further the invention contemplates the provision of a novel make and break arranged in a manner so that the ignition spark may be advanced and retarded in an extremely simple way.

For further comprehension of the invention, and of the objects and advantages thereof, reference will be had to the following description and accompanying drawings, and to the appended claims in which the various novel features of the invention are more particularly set forth.

In the accompanying drawings forming a material part of this disclosure:

Fig. 1 is a side elevational view of a toy airplane motor constructed in accordance with this invention.

Fig. 2 is an end elevational view looking from the right hand end of Fig. 1.

Fig. 3 is a rear elevational view of Fig. 1.

Fig. 4 is an end elevational view looking from the left hand end of Fig. 1 with the propeller removed.

Fig. 5 is a plan view of Fig. 3.

Fig. 6 is a fragmentary enlarged transverse vertical sectional view of a portion of Fig. 1.

Fig. 7 is a fragmentary vertical sectional view taken on the line 7—7 of Fig. 6.

Fig. 8 is a fragmentary horizontal sectional view taken on the line 8—8 of Fig. 6.

Fig. 9 is a transverse vertical sectional view taken on the line 9—9 of Fig. 1.

Fig. 10 is a side elevational view of the crank shaft.

Fig. 11 is an enlarged detail view of a portion of Fig. 6.

The toy airplane motor, according to this invention, includes an air-tight crankcase 10 having a tubular member 11 on one side. The other side of the crankcase is closed with a plug 12 which is threadedly engaged in position. The tubular member 11 is provided with an "Oilite" oil cushion bearing bushing 13. A crank shaft 14 is rotatively engaged through the tubular member 11 and its bushing 13. This crank shaft comprises a shaft proper 14a having a disc portion 14b mounted on its inner end. This disc portion is cut out at the two sides 14c so as to counterbalance the piston rod and piston during operation of the motor.

A cam 15 is mounted on an outer portion of the crank shaft 14 immediately adjacent the outer end of the tubular member 11 on a tapered portion 14bb of the crank shaft. This tapered portion is formed to maintain the compression and vacuum in the crankcase 10, also to permit the setting of the cam in various desired positions, and by so doing the timer, which will be described hereinafter, may also be used in various set positions, such as in the horizontal or vertical positions. A cylinder 16 is mounted on the crankcase 10. The adjacent portions of these parts, cylinder and crankcase, are formed with threads 17 by which they are connected. The cylinder 16 has a bottom opening 18 connecting the interiors of the cylinder and crankcase together. A hollow piston 19 is disposed within the cylinder 16 and is associated with a connecting rod 20 connected thereto with a pin 21'. This pin is prevented from sliding by a pair of piston pin keys 21b, snapped into suitable openings in pin 21', at the ends of the pin, adjacent the inner wall of the hollow piston 19. The lower end of rod 20 is connected to an eccentric pin 21 mounted on the disc 14b. This pin 21 is surrounded by a flanged brass bearing 20a which is held in position by a split washer or rod key 21c which is adapted to engage and anchor in an annular groove 21a in the eccentric pin 21. This bearing prevents the wear of the connecting rod 20 and pin 21, and may be interchanged whenever desired without removing the entire piston 19 from the cylinder 16.

A small fuel tank 22 is supported by a metallic band 23 secured to the plug 12 by a fastening element 24. The band 23 has its outer end split open, and the end portions thereof are connect-

ed together with a screw 25. This screw may be tightened to make the band grip the tank 22, or may be loosened to release the tank.

The top wall of the tank 22 is provided with a removable plug 26, which when removed discloses an opening through which the tank may be supplied with fuel. This plug has a very small vent opening 27 permitting the passage of air into the fuel tank as gasoline, or the fuel is used up.

A fuel discharge pipe 28 extends into the tank through its top wall and terminates near the bottom of the tank. The discharge pipe 28 is secured to the top 22 of the tank 22 by engaging the threaded opening 22a by the threaded portion 28' of the pipe 28. The pipe 28 is formed with a flange 28b, which engages over the top 22' of the tank 22. A gasket 28c is interposed between the flange 28b and the tank top 22' to prevent evaporation of the fluid stored in the tank. Another nut 28d is adapted to engage a threaded extension 28e of the pipe 28, and by means of this nut, the pipe 28 is secured to the inlet pipe 32. The outer end of this pipe 28 is formed with a reduced portion 28a which has a nozzle opening 29. A bushing 30 is threadedly engaged on the reduced end 28a and is provided with a needle valve 31 operating across the nozzle opening 29 for controlling the passage of fuel.

An air inlet pipe 32 has an open outer end 32a and has a central portion through which the reduced end 28a of the fuel pipe 28 passes. This air inlet pipe 32 connects with fuel inlet ports 33 formed in the side wall of the cylinder 16. These ports 33 are located at a point just beneath the piston 19 when the latter is in its outer position.

The cylinder 16 has a jacket 34 attached on one side dividing off an enclosed passage 35. This passage 35 connects with bottom ports 36 adapted to align with ports 37 formed in the piston 19, when the piston is in its inner position. The passage 35 also has top ports 38 which are just above the top of the piston 19 when the piston is in its inner position.

A spark plug 42 is mounted on the outer end of the cylinder 16. The cylinder 16 has a removable head 16a which is held in position by several fastening elements 43. The upper portion of the cylinder 16 is provided with a plurality of closely spaced fins 44 for air cooling purposes.

A bracket 45 is frictionally turnably mounted upon the tubular member 11 (see Figs. 1 and 6). This bracket 45 has an annular bottom portion 45a which is formed with an open split 46. A fastening element 47 engages through lug portions mounted upon or formed on the material adjacent this split 46. This fastening element 47 is in the form of a screw which may be turned in or slightly let out to control the frictional grip of the bracket upon the tubular member 11.

The bracket 45 is provided with an upwardly extending stem portion 45b. At the top this stem portion is formed with a boss 48 into which a screw 49 threadedly engages. The screw 49 supports a steel spring 50. This spring 50 carries a contact 51 of a make and break. This contact 51 is directly opposite a contact 52 which is mounted on the portion 45a, offset to one side of spring 50 in a position where no oil can splash on these contact points. By this arrangement the contacts 51 and 52 are kept clean from the splashing oil and thus the timing of the spark becomes more dependable than other toy airplane motors. The contact 52 is connected with a cable 53 for the ignition of the airplane motor.

The operation of the airplane motor is as follows:

The plug 26 is removed and fuel is placed in the tank 22. The plug is then replaced. The knob 45c is gripped and the bracket 45 is turned so as to retard the spark. It should be noted that when the bracket 45 is turned on the tubular member 11, the end of the spring 50 will be changed relative to the location of the recess 15a of the cam 15. The motor is now ready to be cranked.

The piston 19 during its upstroke will create suction in the cylinder 16, which will draw in air through the air tube 32. Fuel will also be drawn into this tube through the nozzle opening 29. The incoming fuel will enter beneath the piston 19 into the crankcase. Then the piston 19 moves downwards and this fuel will be forced into the crankcase 10. The fuel is being compressed beneath the piston 19. When the piston reaches its extreme lowered position the ports 36 and 37 align with each other and the compressed fuel is permitted to escape up through the passage 35 and through the ports 38 into the power cylinder to the top of the piston 19.

The piston 19 now starts moving upwards and closes the ports 36. The fuel is completely compressed in the cylinder above the piston. When the fuel is completely compressed and the piston starts moving downwards the spark plug 42 functions to ignite the fuel which then drives the piston downwards under power. When the piston uncovers the ports 40 the burned gases will discharge. The baffle 41 tends to prevent an excess loss of good fuel which enters the cylinder through the ports 38 and which must be restrained from freely discharging out of the ports 40.

After the motor starts running the handle 45c is again gripped and the bracket 45 moved around on the tubular member 11 so as to advance the spark to increase the efficiency of the engine.

While I have illustrated and described the preferred embodiments of my invention, it is to be understood that I do not limit myself to the precise constructions herein disclosed and the right is reserved to all changes and modifications coming within the scope of the invention as defined in the appended claims.

Having thus described my invention, what I claim as new, and desire to secure by United States Letters Patent is:

1. In an airplane motor, an air-tight crankcase having a tubular member on one side, a crank shaft rotative through said tubular member and having a cam adjacent the outer end of said tubular member, a cylinder mounted on said crankcase and having its inner end connected with the interior of said crankcase, a hollow piston in said cylinder and having a connecting rod connecting it with said crank shaft, a small fuel tank mounted on said crankcase and having a fuel discharge pipe with a nozzle opening controlled with a needle valve, an air inlet pipe encasing that portion of the fuel discharge pipe having the nozzle opening and connecting with a fuel inlet port in the side of said cylinder at a point beneath said piston when the piston is in its outer position, said cylinder having a passage with a bottom port aligning with a port in said piston when the piston is in its inner position and having a top port just above the piston in its in-

ner position, said cylinder also having a burnt fuel discharge port just above said top port, and a baffle on the top of said piston for separating the latter ports, said mounting of said fuel tank comprising a band securely encircling said fuel tank, a plug closing the end of said crankcase opposed to said tubular member, and screw passing freely through an opening in said band and threadedly engaging an opening in said plug, said screw having its head sunk so as to be flush with the inside periphery of said band.

2. In an airplane motor, an air-tight crankcase having a tubular member on one side, a crank shaft rotative through said tubular member and having a cam adjacent the outer end of said tubular member, a cylinder mounted on said crankcase and having its inner end connected with the interior of said crankcase, a hollow piston in said cylinder and having a connecting rod connecting it with said crank shaft, a small fuel tank mounted on said crankcase and having a fuel discharge pipe with a nozzle opening controlled with a needle valve, an air inlet pipe encasing that portion of the fuel discharge pipe having the nozzle opening and connecting with a fuel inlet port in the side of said cylinder at a point beneath said piston when the piston is in its outer position, said cylinder having a passage with a bottom port aligning with a port in said piston when the piston is in its inner position and having a top port just above the piston in its inner position, said cylinder also having a burnt fuel discharge port just above said top port, and a baffle on the top of said piston for separating the latter ports, said crankcase being provided with a plug on the side opposite said tubular member.

3. In an airplane motor, an air-tight crankcase having a tubular member on one side, a crank shaft rotative through said tubular member and having a cam adjacent the outer end of said tubular member, a cylinder mounted on said crankcase and having its inner end connected with the interior of said crankcase, a hollow piston in said cylinder and having a connecting rod connecting it with said crank shaft, a small fuel tank mounted on said crankcase and having a fuel discharge pipe with a nozzle opening controlled with a needle valve, an air inlet pipe encasing that portion of the fuel discharge pipe having the nozzle opening and connecting with a fuel inlet port in the side of said cylinder at a point beneath said piston when the piston is in its outer position, said cylinder having a passage with a bottom port aligning with a port in said piston when the piston is in its inner position and having a top port just above the piston in its inner position, said cylinder also having a burnt fuel discharge port just above said top port, and a baffle on the top of said piston for separating the latter ports, said crankcase being provided with a plug on the side opposite said tubular member, said fuel tank being supported by a band mounted on said plug, said band having a split portion frictionally closed with a fastening element.

JOSEPH MOLNAR.

Dec. 15, 1942. B. J. MUENK 2,305,186

ENGINE VENTILATING

Filed June 5, 1940

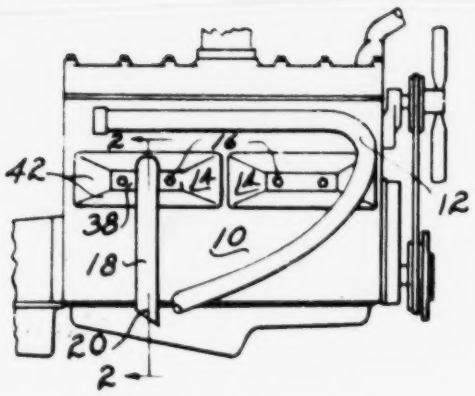

Fig. 1

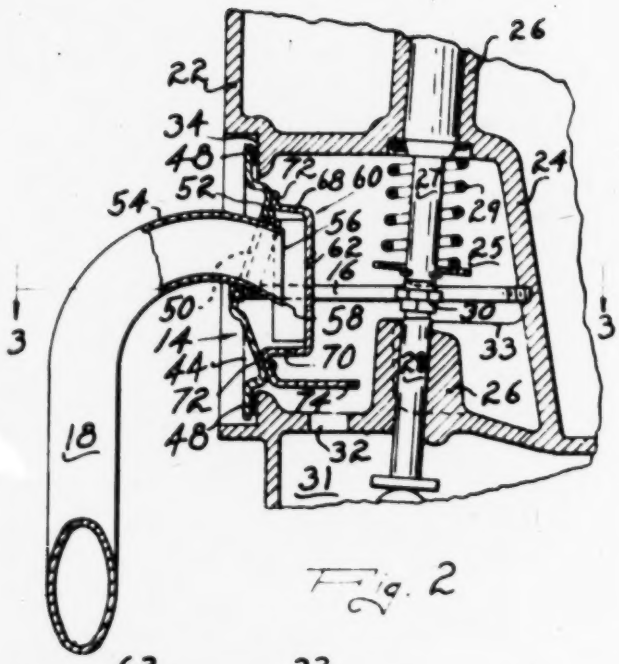

Fig. 2

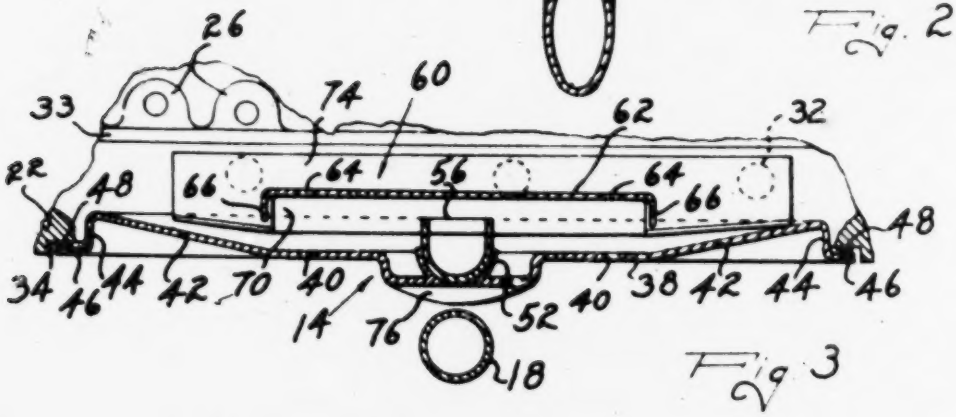

Fig. 3

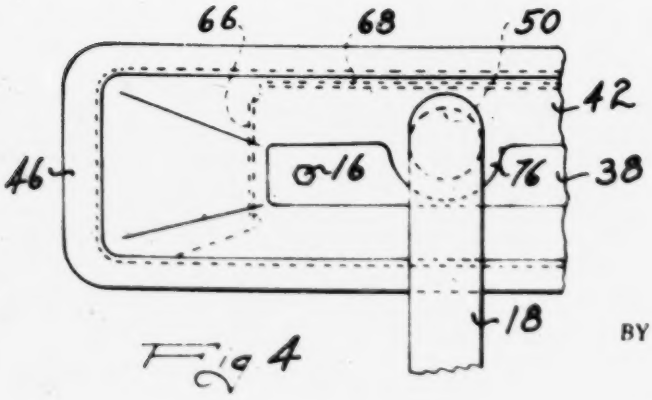

Fig. 4

INVENTOR.
BERNARD J. MUENK.

BY Carl J. Barbee

ATTORNEY.

Patented Dec. 15, 1942

2,305,186

UNITED STATES PATENT OFFICE

2,305,186

ENGINE VENTILATING

Bernard J. Muenk, Kenosha, Wis., assignor to Nash-Kelvinator Corporation, Kenosha, Wis., a corporation of Maryland

Application June 5, 1940, Serial No. 338,865

6 Claims. (Cl. 121—194)

This invention relates to engine ventilators and has particular reference to means for providing a vent from the crank case of an internal combustion engine to the atmosphere outside of the engine.

It is an object of this invention to provide a vent which will adequately remove fumes and air from a crank case without allowing excessive quantities of oil to escape from the engine.

It is another object of this invention to provide novel means for baffling a vent to prevent the escape of oil therethrough.

It is another object of this invention to provide a vent pipe which will act as a condenser to return lubricant to the engine.

Other objects and advantages of this invention will be apparent from a consideration of the following specification and claims and the attached drawing of which there is one sheet and in which—

Figure 1 represents a side elevation of an internal combustion engine;

Figure 2 represents a section taken along the plane indicated by the line 2—2 of Figure 1 and looking in the direction of the arrows;

Figure 3 represents a horizontal section taken along a plane indicated by the line 3—3 of Figure 2 and looking in the direction of the arrows;

Figure 4 represents an enlarged side elevation of a portion of the valve cover plate and breather tube illustrated in Figure 1.

In Figure 1 I have illustrated an internal combustion engine 10 provided with an exhaust pipe 12 and two valve chamber cover plates 14 secured to the engine by means of bolts 16. The rear cover plate 14 is provided with a breather tube 18 for removing dangerous fumes and gases which may blow by the pistons and valves of the engine and collect in the engine. The breather tube 18 extends to a low point beside the engine and is tapered upwardly on the back side as indicated at 20 so that the stream of air thrown backward from the cooling fan will act to draw the fumes out of the tube. The fumes consist of water vapor, exhaust gases and partially burned fuel and air which might explode and would dilute the lubricating oil if allowed to remain in the engine.

More specifically the engine 10 consists of a casting having a side wall 22 (see Figures 2 and 3) which is recessed at 24 to form a valve chamber 25. The top and bottom walls of the chamber 25 are provided with bosses 26 which are apertured to form guides for valve stems 27 and valve push rods 28. Chamber 25 is adapted to house the valve springs 29 and valve adjusting mechanism 30 which are commonly used in automotive construction today. The lower wall of the recess chamber 25 separates the valve chamber from the crank case and cam shaft space 31 which is in open communication with the oil pan and oil storage space (not shown). The lower wall of the chamber 25 is apertured as at 32 to permit oil splash and oil vapors to rise from the crank case chamber 31 to the valve chamber 25 and lubricate the valve guides and valve mechanism. Lubricant is also fed to the valve chamber under pressure where it collects behind dams 33 until it fills up over the sloping tops of the lower bosses 26 to lubricate the push rods 28. Apertures 32 form a return passage for excess oil spilling over the dams 33 to return to the crank case.

The side wall 22 of the engine is shaped to provide a recessed shoulder 34 around the valve chamber 25, which shoulder forms a seat for valve cover plate 14. The valve cover plate functions to keep dust and moisture from the valve mechanism and to prevent the excessive loss of lubricant from the valve chamber 25.

Since the crank case 31 often becomes filled with burned and partially burned gases which blow by the pistons and valves of the engine, particularly in older engines, these gases are free to rise through the apertures 32 into the valve chamber 25, and it has been the practice to provide a breather tube similar to my breather tube 18 through which these gases could escape. However, I have found that in addition to allowing the gases to escape, a considerable quantity of oil and oil vapor is carried out of the breather tube, and it is toward preventing this loss of lubricant to which my invention is directed.

The valve cover plate consists of a stamping having a flat central surface 38 apertured at 40 to provide space for the bolts 16 which are threaded into the inner wall 24 of the valve chamber 25. On all sides of the flat surface 38 the cover plate 14 is bent back in sloping planes 42 which terminate at their outer edges in the outturned flange 44 which is carried continuously around the plate. The flange 44 is turned down in a flat flange 46 which seats against the shoulder portion 34 of the engine to close the valve chamber 25. I have provided a gasket 48 between the flange 46 and the surface 34 to insure a tight seal between the surfaces.

The upper sloping plane 42 which slants downwardly and outwardly to the flat surface 38 is apertured at 50, and the sides of the aperture

are inwardly flanged as at 52. Positioned within the flanged aperture 50 and normal to the upper sloping surface 42 is breather tube 18 which may be secured in the aperture 50 by press fitting or welding and which is formed with an upper curved portion 54. Since the flanged opening 50 is in the surface 42 which slants outwardly from the valve chamber 26, it is apparent that the curved portion 54 of the breather tube will extend first in an upward direction from within the valve chamber and then downward to the lower end of the tube. The inner end of the breather tube 18 is cut off in a vertical plane as shown at 56 rather than in a plane at right angles to the axis of the tube at that point. This construction of the breather tube causes any oil vapors which may be carried into the tube with the combustion gases to impinge upon the walls of the breather tube. Since the greater part of the curved section 54 of the breather tube is outside of the valve chamber 26 and subject to the cooling action of the fan, a great deal of this lubricant vapor will be condensed and will drain back down the curved section of the breather tube to the lip 58 at the lower side of the inner end 56 of the breather tube. Oil vapors condensing within this length of tube 18 will drain to the bottom thereof and will drip off the lower lip, the lowest point on the tube. If the end were cut off square, some drippings might fall directly across the path of the vented vapors and be carried out by the rush of gases.

To further prevent excessive escape of lubricant through the breather tube, I have provided a baffle generally indicated at 60 on the inside of the cover plate 14 and over the mouth 56 of the breather tube 18. Baffle 60 consists of a central flat plate 62 apertured at 64 to pass the bolts 16. The edges of the flat plate 62 are all bent outwardly to form end walls 66, top wall 68, and bottom wall 70. It will be noted that the top wall 68 and bottom wall 70 are slightly longer than the end walls 66 so that the end walls 66 do not touch the cover plate 14 and that the walls are not joined at their corners, thus providing spaces through which the fumes within the valve chamber 26 may pass to reach the breather tube. Upper wall 68 and lower wall 70 are turned over in slanting flanges 72 which are secured to the slanting surfaces 42 of the cover plate as by welding. The lower flange 72 of the baffle is further bent inwardly in an enlarged horizontal baffle 74 which extends over the apertures 32 in spaced relationship therewith to prevent an excessive amount of lubricant from being splashed into the valve chamber by the action of the crank shaft and cam shaft.

From the above description it should be apparent that the fumes being exhausted from the valve chamber 26 together with any entrained lubricant vapor must pass between the sides 66 of the baffle 60 and cover plate 14. From this passage the fumes and vapor move generally horizontally to the mouth of the breather tube, at which point they must change direction and pass through the breather tube. By directing the gases in this path I have decreased the velocity of the gases over the lip 58 so that there is no tendency to pick up and carry out lubricant which has condensed in the curved portion of the breather tube and drained back toward the valve chamber 26. Should the sloping surface 42 of the cover plate 46 be too small to provide space for the aperture 50, the sloping surface 42 may be continued for a short distance by pressing out a portion of the flat surface 38 as is indicated at 76.

While I have described my invention in some detail, I intend this to be an example only and not limiting on my invention to which I make the following claims:

1. A breather device for an engine comprising a cover plate, a breather tube extending in a smooth curve through said plate, first upwardly to a high point on one side of said plate and then downwardly, the end of said tube on the opposite side of said plate from said high point terminating in a vertical plane spaced from said plate, and means positioned adjacent to said last mentioned end for obstructing vertical flow of vapors to said end of said breather tube.

2. A breather device for an engine comprising a cover plate, a baffle plate secured to one side of said cover plate and spaced therefrom, and a breather tube extending through said cover plate and having an end terminating in a vertical plane lying in the space between said cover plate and baffle plate, said tube extending upwardly from said end and having another end which is bent downwardly and terminates below said first mentioned end.

3. A breather device for an engine comprising a cover plate, a channel-shaped baffle plate secured to one side of said cover plate along the top and botton edges of said baffle and having its central portion spaced from said cover plate, said baffle plate having side edges extending toward but terminating in spaced relation to said cover plate, said cover plate and baffle plate together forming an elongated chamber open at its ends, and a breather tube extending from said elongated chamber through said cover plate.

4. A breather device for an engine comprising a cover plate, a channel-shaped baffle plate having flanged top and bottom edges secured to one side of said cover plate, legs on each end of said baffle plate, said legs being narrower than the width of said channel and extending from said baffle plate toward but terminating in spaced relation to said cover plate, and a vent tube supported by said cover plate and extending therethrough and terminating in the space between said baffle plate and cover plate.

5. A breather device for ventilating a chamber having an inlet comprising a cover plate, a breather tube extending through said cover plate, a baffle secured to one side of said cover plate and spaced therefrom, and a flange formed on the bottom of said baffle and adapted to extend completely over said inlet, said baffle extending over one end of said tube.

6. A breather device for ventilating a chamber having an inlet in the lower wall thereof comprising a cover plate adapted to close said chamber, a breather tube extending through said cover plate, a baffle supported by said cover plate in spaced relation therewith and over one end of said breather tube, and a flange formed on said baffle extending completely over said inlet in spaced relation thereto.

BERNARD J. MUENK.

April 11, 1944. A S BOSMA 2,346,148

OUTBOARD MOTOR

Filed Aug. 1, 1940 3 Sheets-Sheet 1

Fig. 1.

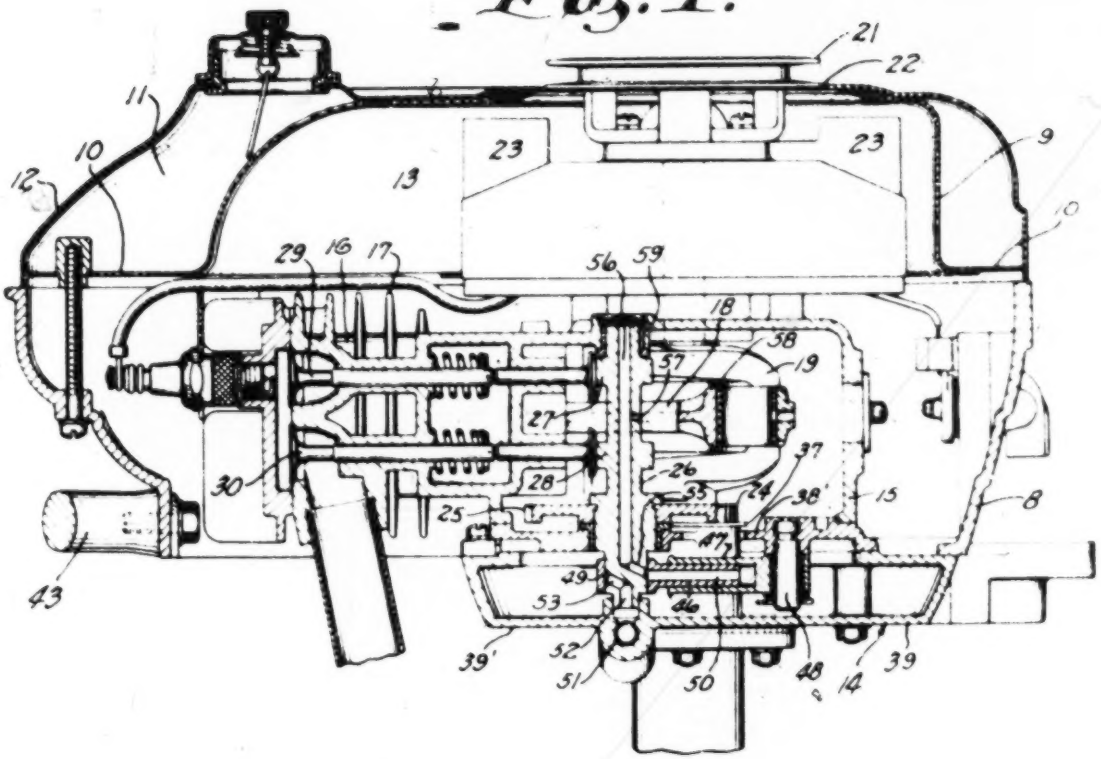

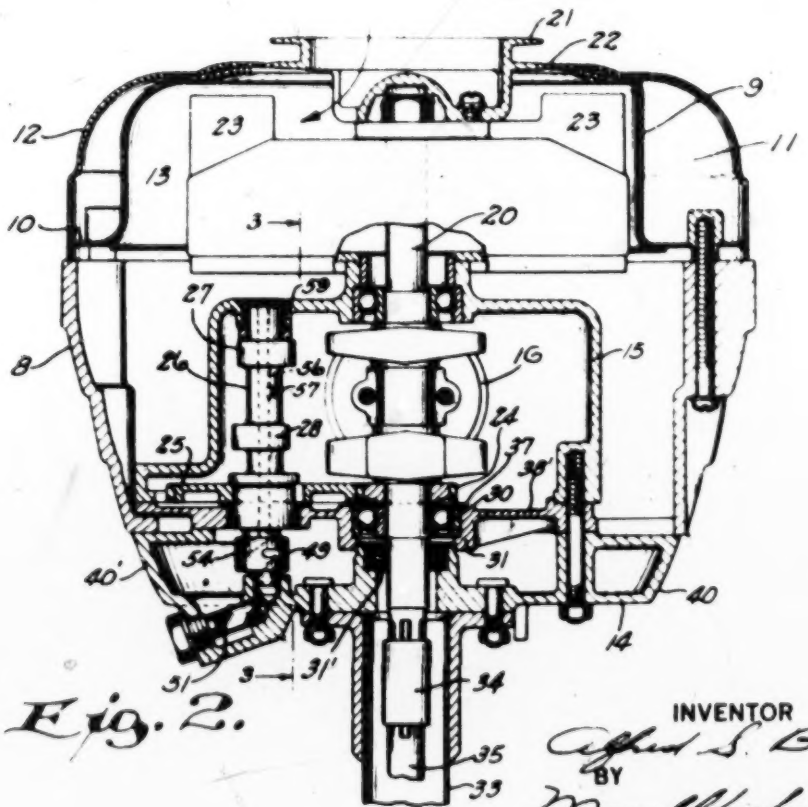

Fig. 2.

INVENTOR
Alfred S. Bosma
BY
Morsell, Mackaye & Morsell
ATTORNEYS

April 11, 1944. A. S. BOSMA 2,346,148

OUTBOARD MOTOR

Filed Aug. 1, 1940 3 Sheets-Sheet 2

Fig. 3.

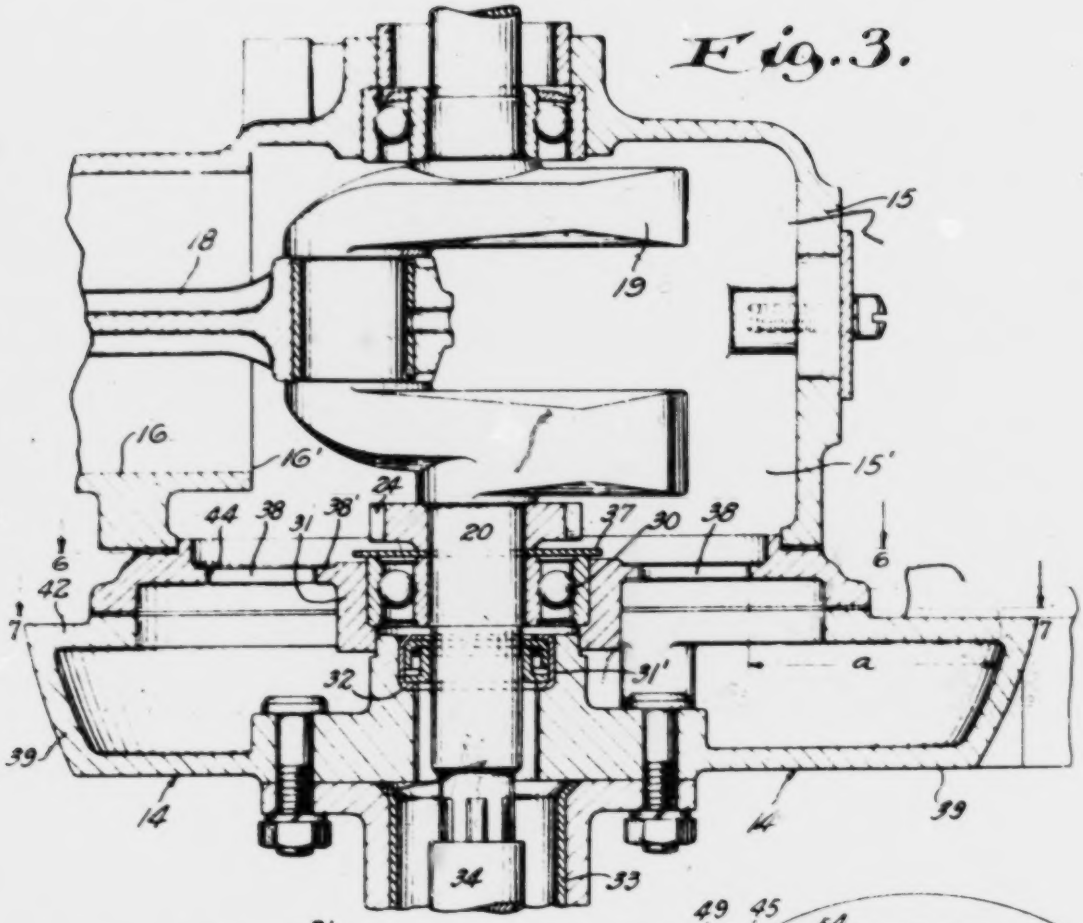

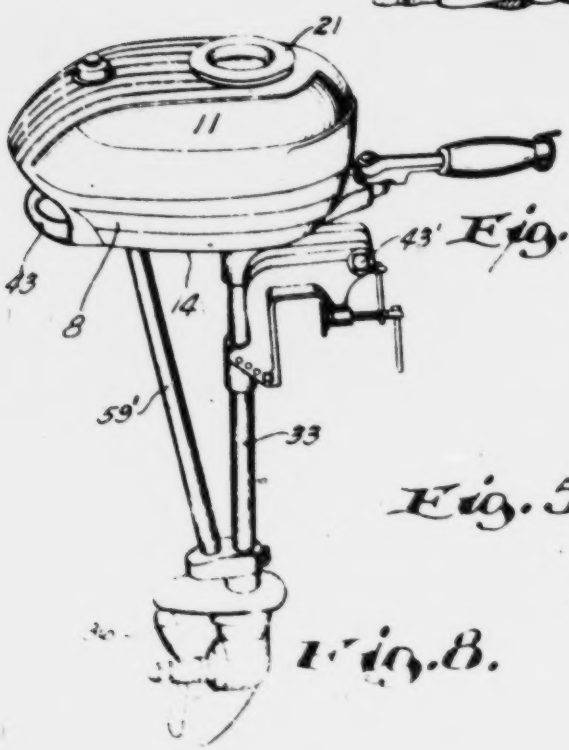

Fig. 8.

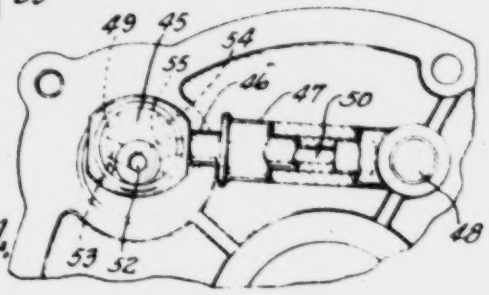

Fig. 4.

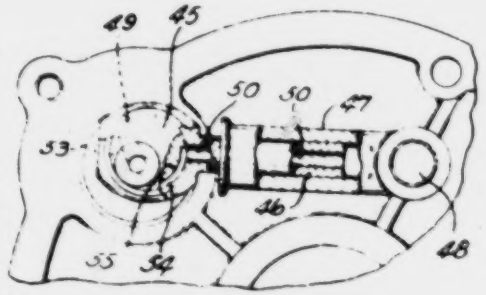

Fig. 5.

INVENTOR

Alfred S. Bosma

BY

Morsell, Kleeber & Morsell

ATTORNEYS

April 11, 1944. A. S. BOSMA 2,346,148

OUTBOARD MOTOR

Filed Aug. 1, 1940 3 Sheets-Sheet 3

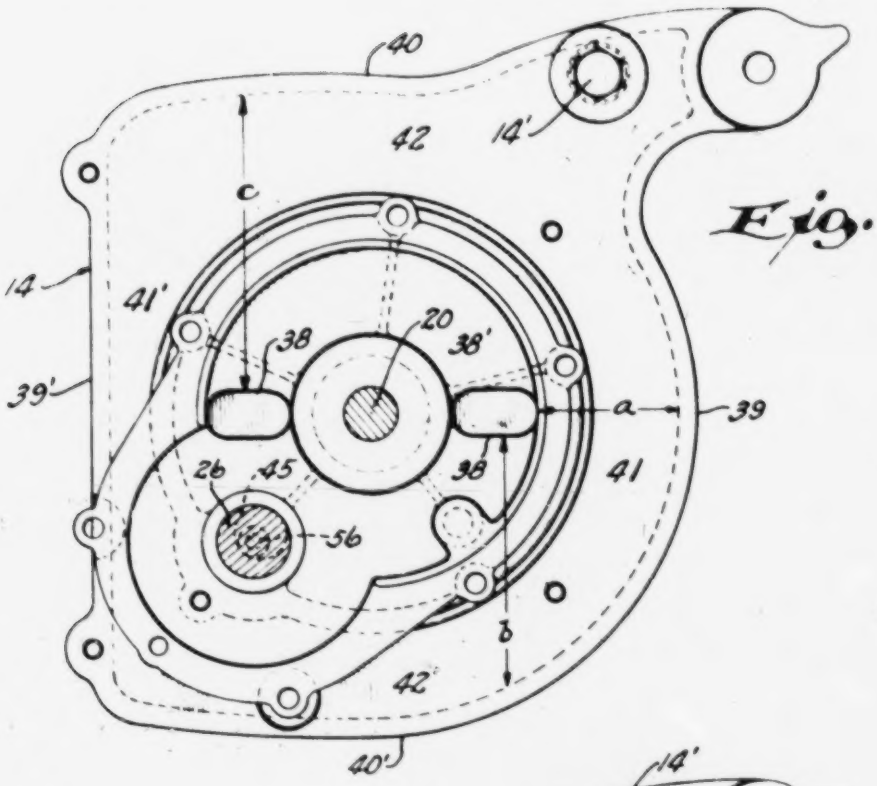

Fig. 6.

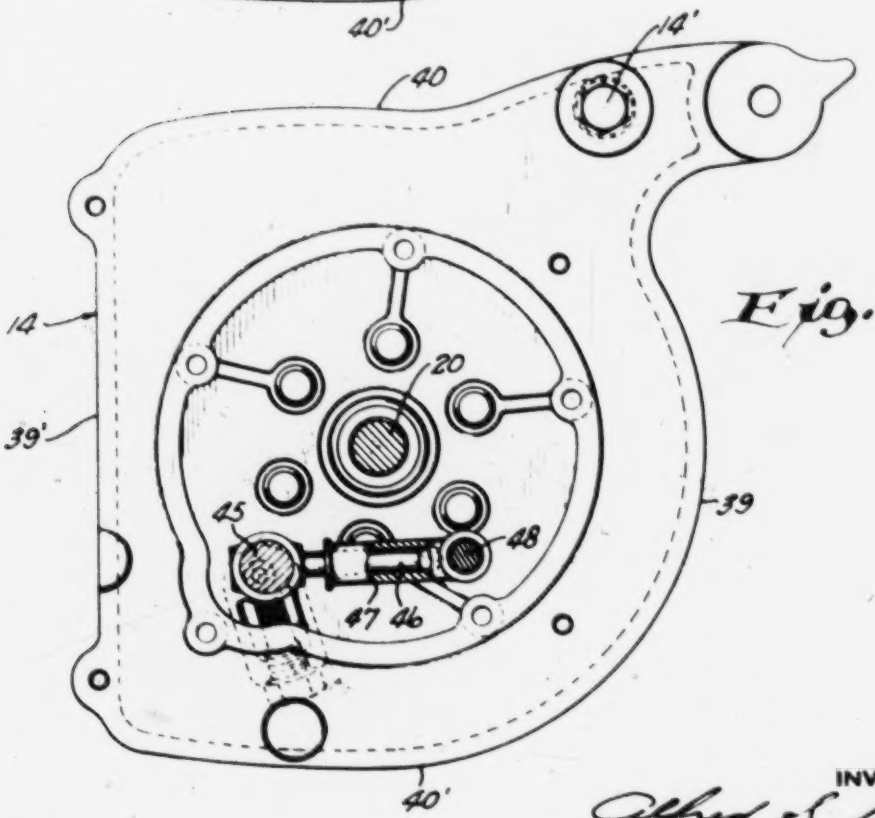

Fig. 7.

INVENTOR
Alfred S. Bosma
BY
Morsell Lieber & Morsell
ATTORNEYS

Patented Apr. 11, 1944

2,346,148

UNITED STATES PATENT OFFICE

2,346,148

OUTBOARD MOTOR

Alfred S. Bouma, New Holstein, Wis., assignor, by mesne assignments, to Hart-Carter Company, Peoria, Ill., a corporation of Delaware

Application August 1, 1940, Serial No. 348,053

11 Claims. (Cl. 194—6)

This invention relates to improvements in outboard motors.

Outboard motors as commonly constructed are two cycle and lubricated by mixing a minor quantity of lubricating oil with the gasoline or other fuel in the main fuel tank. This requires the preparation of a special mixture and is otherwise objectionable. It is recognized that greater efficiency and economy in operation can be obtained by the use of a four cycle motor wherein there is a separate oil reservoir and mechanism for feeding said oil to the parts to be lubricated, but oil in a separate reservoir has heretofore presented problems in an outboard motor. One of said problems arises from the fact that an outboard motor is frequently tilted to a horizontal position while on a boat or while being manually carried or placed on its side while being transported in a vehicle. Another problem is that of leakage of oil during operation, particularly leakage past the crank shaft bearing down into the propeller shaft sleeve.

It is, therefore, one of the objects of the present invention to provide an improved four cycle outboard motor construction having a separate oil reservoir and oil feeding means, said reservoir being so located and constructed with reference to the position of operating parts thereabove that the motor may be tilted to all necessary positions or placed on its side without causing oil from the reservoir to enter the cylinder and start trouble, and said reservoir being so located that surplus oil will drain from the bearings back into the reservoir during normal operation.

A further object of the invention is to provide in a construction as above described, means for effectively feeding the oil to the parts to be lubricated.

A still further object of the invention is to provide in an outboard motor having a separate oil reservoir, means operable while the motor is running for forcibly directing surplus oil away from the crank shaft bearing at the bottom of the main motor housing and back into the reservoir, and means for preventing loss of oil through the propeller shaft sleeve.

A further object of the invention is to provide in an outboard motor an improved air cooling construction whereby the necessity of utilizing a water pump is eliminated.

A still further object of the invention is to provide an air cooled outboard motor construction as above described, a fan chamber, and a fuel tank surrounding said fan chamber and serving as a shroud therefor whereby a compact and attractive design is made possible.

With the above and other objects in view the invention consists of the improved motor for outboard and other uses, and all its parts and combinations, and all equivalents thereof.

In the accompanying drawings illustrating one complete embodiment of the preferred form of the invention, and wherein like reference characters designate the same or similar parts in the various views,

Fig. 1 is a longitudinal vertical sectional view through the motor housing;

Fig. 2 is an irregular transverse sectional view through said housing;

Fig. 3 is an enlarged sectional view taken approximately on line 3—3 of Fig. 2;

Fig. 4 is a fragmentary view on an enlarged scale looking up at the oil pump from the bottom of the reservoir and showing the oil pump with its piston duct in registration with the discharge port at the middle of a discharge stroke;

Fig. 5 is a similar view showing the piston near the end of its discharge stroke;

Fig. 6 is a view taken approximately on line 6—6 of Fig. 3 looking down on the reservoir with its cover plate in position;

Fig. 7 is a view taken approximately on line 7—7 of Fig. 3 looking down on the reservoir with its cover plate removed; and

Fig. 8 is a perspective view of the entire outboard motor.

Referring more particularly to the drawings, the numeral 8 designates an exterior housing for the motor proper, the numeral 9 a hood over the housing 8 having an outwardly directed surrounding flange 10 forming the bottom of a fuel tank 11, with the outside of the hood 9 forming one side wall of the fuel tank, and a surrounding wall 12 forming the other wall of the fuel tank. The hood 9 forms a fan chamber 13, and the gasoline tank forms a surrounding shroud for the fan chamber resulting in a compact arrangement and permitting an attractive exterior appearance, as shown in Fig. 8. Secured to the rear bottom portion of the housing 8 is a casting 14 forming an oil reservoir having a filling opening normally closed by a plug 14', and above the oil reservoir and within the main housing 8 is a crank case housing 15.

The motor has a cylinder 16 provided with external cooling fins 17, and operable within the cylinder is the usual piston operating a connecting rod 18 which in turn operates a crank 19 to cause rotation of the crank shaft 20. The upper

end of the crank shaft is rigidly connected with a starting rope pulley 21 which projects through an opening 22 in the top of the fan chamber 13, and air may be drawn into the fan chamber through open central parts of the pulley 21 as indicated by the arrow in Fig. 2. The upper portion of the crank shaft drives a fan having vanes 23 located within the fan housing, and said portion of the crank shaft may also operate a magneto. Below the crank 19 on the crank shaft is a crank shaft gear 24 driving a timing gear 25, and said timing gear in turn causes rotation of a cam shaft 26 carrying cams 27 and 28 which operate the valves 29 and 30 respectively.

Below the crank shaft gear 24 the crank shaft is surrounded by a shrouded ball bearing assembly 32 located in a bearing pocket 31, and the crank shaft then extends downwardly through a rawhide oil seal assembly 31' mounted in an enlarged recess 32 of a boss which extends upwardly from the bottom of the oil reservoir 14. The crank shaft then depends into the propeller shaft sleeve where it is connected by a coupling member 34 with the propeller shaft 35, the latter being adapted to drive the propeller 36 in the usual manner.

Rotatable with the crank shaft and positioned between the crank shaft gear 24 and the ball bearing assembly 32 (see Fig. 3) is an oil slinger disk 37 which rotates at high speed with the crank shaft and which is adapted to throw surplus oil draining thereon back into the oil reservoir through openings 38 in the reservoir cover plate 39'. What little oil might work its way along beneath the slinger 37 and through the shrouded bearing 32 will be prevented by the rawhide oil seal 31' from leaking into the propeller shaft sleeve 33. However, without the novel use of the slinger in this combination to direct surplus oil during operation back into the oil reservoir, the best packing such as the packing 31 would be ineffective to prevent leakage. The combination of said packing, however, and the slinger in this particular use accomplishes the desired purpose.

The oil reservoir 14 has a surrounding offset extension 39 in the front, 39' in the rear, 40 on one side, and 40' on the other side, with top flange portions 41, 41', 42 and 42' which project inwardly and serve to trap oil and maintain the same in the reservoir. In addition the reservoir has the cover plate 39' which allows communication between the reservoir and crank case only through the openings 38 which are necessary to permit surplus oil from the crank case to flow back into the reservoir. The distance a in Figs. 3 and 6 is such that most of the oil normally in the reservoir 14 can be accommodated in the front extension 39 when the motor is in horizontal position while being carried by the handle 43, or while tilted on the hinge 43' to lift the propeller out of the water. Thus while being carried only a minor amount of oil will flow out of the reservoir through opening 38 and into the crank case 16, and this minor amount will stay in the end 16' of the crank case well below the end 16' of the cylinder so none of said oil will work up into the cylinder to cause fouling of plugs or other trouble (see Fig. 3).

Due to the position of the carrying handle 43, hinge 43', and to the shape of the housing the motor is not, in practice, tilted in the opposite direction to that just described. The motor is, however, frequently placed on either side, particularly while being transported in an automobile, and when so disposed it is important that no oil get into the cylinder 16. With the present construction the distances b and c (Fig. 6) are such that practically all oil can be accommodated in the oil reservoir below the openings 38 when the motor is on its side. What little oil might flow into the crank case through the opening 38 would travel by gravity to a point far below the sides of the cylinder 16, so no harm would result.

As soon as the motor is righted from any of said non-operating positions any oil in the crank case will soon flow back into the reservoir through the openings 38, and when the motor is operated the action of the slinger 37 will assist in returning said oil to the reservoir.

The lower end of the cam shaft 26 has a cam disk 45 mounted thereon and positioned within the oil reservoir. This cam disk operates a piston 46 movable in a cylinder 47, the other end of the cylinder being pivotal on a pin 48 (see Figs. 4 and 5).

It is obvious that when the motor is in operation and when the recess 49 of the cam 45 is in registration with the duct 50 of the piston 46, the piston being moving to withdrawn position in the cylinder 47, a vacuum will be created in the inner end of the cylinder 47 causing oil to be sucked from the reservoir through filter 51, through ducts 52 and 53, through recess 49, into the duct 50 of the piston and into the cylinder. As the cam disk 45 rotates, due to its eccentric relationship with respect to the cam shaft, it will tend to push the piston inwardly into the cylinder and at the same time the peripheral recess 54 will register with the duct 50 of the piston as in Figs. 1, 4 and 5 so that the oil which was previously sucked into the cylinder will be forcibly expelled through the duct 50 into recess 54, through duct 55 in the cam disk 45 and up through longitudinal duct 56 of the cam shaft. The oil under pressure in the duct 56 will be forcibly ejected from apertures 57 (see Fig. 1) onto the bearing 58 between the connecting rod and crank shaft. This oil will then tend to be splashed onto other operating parts. In addition, oil from the upper end of the duct 56 will lubricate the bearing 59 for the upper end of the cam shaft. Due to the fact that all of these bearings which are lubricated are located above the oil reservoir, all surplus oil will drain back into the oil reservoir 14 through the openings 38 assisted by the action of the oil slinger 37.

It is thus apparent that a very effective method of feeding oil is provided wherein the oil is pumped from a lower reservoir and wherein surplus oil is directed back into said reservoir by the novel mechanism and arrangement of parts. It is further apparent that the reservoir is so constructed that peripheral portions have a sufficient capacity to handle a substantial amount of oil in the reservoir when the motor is tipped to horizontal position or laid on its side. It is also apparent that the construction is such that whatever oil does enter the crank case, when the motor is in one of said non-operating positions, will flow to portions of the crank case well below the cylinder so that said oil cannot enter the cylinder and cause trouble.

The fan vanes 23 are adapted to effectively circulate air drawn in through the center of the pulley 21, around the cylinder and other operating parts, to keep the temperature within desired limits.

Exhausted gases from the engine are discharged

through the exhaust pipe 89' below the water level to eliminate noise and objectionable gases.

In view of the above it is apparent that an outboard motor construction has been provided which is compact, light in weight, neat in appearance, and which nevertheless provides for efficient cooling and for lubrication from a separate oil reservoir with a minimum of operating parts, thereby making it practical to use a four cycle engine for outboard motor purposes. The four cycle principle is advantageous over the two cycle arrangement now used in outboard motors because in the latter the oil and gas must be mixed and both stored in a common reservoir. To employ a four cycle principle oil must be in a separate reservoir from the gasoline, and this has heretofore been considered an impractical arrangement in outboard motors because of the various positions in which the motor is disposed during handling and use. Further advantages of the four cycle motor over the two cycle are that in the two cycle construction the presence of lubricating oil in the gasoline effects efficiency, causes fouled plugs and hard starting, and in the two cycle construction it is necessary that each charge of fuel be a full charge whereas in the four cycle construction the amount of a charge can be cut down as desired. This renders the four cycle principle more economical and more flexible as to speed.

It is obvious that features of this invention may be utilized in motors adapted for other than outboard use, and it is also obvious that various changes and modifications may be made without departing from the spirit of invention, and all of such changes are contemplated as may come within the scope of the claims.

What I claim is:

1. In an outboard motor having a support and having means whereby the motor may be pivoted forwardly on said support to an inoperative position, a combustion engine provided with a crank case and with a cylinder rearwardly of said crank case, a reservoir for lubricating oil positioned below said crank case when the motor is in normal operating position, there being a drain opening between said crank case and reservoir, means for feeding oil from said reservoir to parts in the crank case to be lubricated, the top of the reservoir at the forward end thereof having an inwardly extending flange in sealing connection with the front and side walls of the reservoir forming together with the front, side and bottom walls of the reservoir, a trap in the forward end of the reservoir of a size to accommodate the major portion of oil normally in the entire reservoir whereby said oil is substantially confined in the trap portion of the reservoir upon forward tilting of the motor said trap portion being located remote from the cylinder so that any oil not accommodated in the trap portion will flow into the end of the crank case remote from the cylinder when the motor is in said forwardly tilted position.

2. In an outboard motor having a support and having means whereby the motor may be pivoted forwardly on said support to an inoperative position, a combustion engine provided with a crank case, a reservoir for lubricating oil positioned below said crank case when the motor is in normal operating position, there being a drain opening between said crank case and reservoir, means for feeding oil from said reservoir to parts in the crank case to be lubricated, the top of the reservoir having a flange extending inwardly from the upper edges of the front and side walls of the reservoir and in sealing connection with said walls to form side and front receptacles each of a size to accommodate the major portion of oil normally in the entire reservoir whereby said oil is substantially confined in one of said receptacle portions of said reservoir upon forward tilting of the motor or when the motor is placed on either side.

3. In an outboard motor having a support and having means whereby the motor may be pivoted forwardly on said support to an inoperative position, a combustion engine provided with a crank case and with a cylinder rearwardly of said crank case, a reservoir for lubricating oil of greater area in plan view than the corresponding area of the crank case positioned below said crank case when the motor is in normal operating position, said increased area of the reservoir including a forward portion which is offset laterally from the front upright wall of the crank case, there being a drain opening between said crank case and reservoir, means for feeding oil from said reservoir to parts in the crank case to be lubricated, said offset portion of the reservoir having a top cover flange and forming a trap of a size to accommodate the major portion of oil normally in the entire reservoir when the motor is tilted forwardly said trap portion being located remote from the cylinder so that any oil not accommodated in the trap portion will flow into the end of the crank case remote from the cylinder when the motor is in said forwardly tilted position.

4. In an outboard motor having a support and having means whereby the motor may be pivoted forwardly on said support to an inoperative position, a combustion engine provided with a crank case, a reservoir for lubricating oil of greater area in plan view than the corresponding area of the crank case positioned below said crank case when the motor is in normal operating position, said increased area of the reservoir including portions in the front and on each side which are offset laterally from the adjacent upright walls of the crank case, there being a drain opening between said crank case and reservoir, means for feeding oil from said reservoir to parts in the crank case to be lubricated, said offset portions of the reservoir having top cover flanges and forming traps each of a size to accommodate the major portion of oil normally in the entire reservoir when the motor is tilted forwardly or placed on either side.

5. In an outboard motor having a support and having means whereby the motor may be pivoted forwardly on said support to an inoperative position, a combustion engine provided with a crank case, a reservoir for lubricating oil of greater area in plan view than the corresponding area of the crank case positioned below said crank case when the motor is in normal operating position, said increased area of the reservoir including a portion extending entirely around the reservoir, which is offset laterally from the upright walls of the crank case, there being a drain opening between said crank case and reservoir, means for feeding oil from said reservoir to parts in the crank case to be lubricated, said offset portions of the reservoir having top cover flanges and forming traps for accommodating the major portion of the oil normally in the entire reservoir when the motor is tilted up to approximately 90° in any direction away from normal operating position.

6. In an outboard motor having a support and having means whereby the motor may be pivoted forwardly on said support to an inoperative position, a combustion engine provided with a cylin-

P-344

der in the rear portion of the motor and having a crank case in the forward portion, a reservoir for lubricating oil positioned below the crank case when the motor is in normal operating position, there being a drain opening between said crank case and reservoir, means for feeding oil from said reservoir to parts in the crank case to be lubricated, said reservoir having a portion offset forwardly from the front of the crank case forming a trap of a size to accommodate the major portion of oil normally in the entire reservoir when the motor is tilted forwardly, any oil in the crank case being accommodated in the end thereof remote from the cylinder.

7. In an outboard motor or the like having a combustion engine provided with a crank case and having a crank shaft which is substantially vertically disposed in said crank case when the motor is in normal operating position, a bearing within which the lower end of the crank shaft is journaled, a reservoir for lubricating oil surrounding the lower end of the crank shaft, there being a drain opening in the bottom of the crank case communicating directly with said reservoir through which surplus oil may drain back into said reservoir, means in the reservoir through which the crank shaft extends for sealing all portions of the crank case from the oil reservoir and from oil which flows through said drain opening in the bottom of the crank case, means in the bottom of the crank case rotatable with said crank shaft above and adjacent to said bearing for centrifugally throwing surplus oil which drains thereon from the crank case into said opening and directly back into said reservoir, and means for feeding oil from said reservoir to parts in said crank case to be lubricated.

8. In an outboard motor or the like having a combustion engine provided with a crank case and having a crank shaft and a cam shaft which are substantially vertically disposed in said crank case when the motor is in normal operating position, a reservoir for lubricating oil surrounding the lower end of the crank shaft and positioned below the crank case, an eccentric on said cam shaft positioned in said reservoir, there being a drain opening between the top of said reservoir and said crank case through which surplus oil may drain back into said reservoir, an oil pump cylinder mounted for pivotal movement in said reservoir, a tubular piston movable in said cylinder and having a projecting end with a circular opening within which the cam shaft eccentric fits so that the pump is operated by rotation of said cam shaft, said cam shaft having a longitudinal oil duct therein within a discharge outlet in the crank case, said eccentric of the cam shaft having a port communicating with the longitudinal oil duct of the cam shaft and adapted to communicate with the interior of the tubular piston in certain positions of operation.

9. In an outboard motor or the like having a combustion engine provided with a crank case and having a crank shaft which is substantially vertically disposed in said crank case when the motor is in normal operating position, a reservoir for lubricating oil surrounding the lower end of the crank shaft and positioned below the crank case, there being a drain opening in the bottom of the crank case communicating directly with said reservoir through which surplus oil may drain back into said reservoir, a ball bearing assembly around the lower end of the crank shaft and above the reservoir, means connected to the bottom of the crank case for holding said bearing assembly in position, an oil seal engageable around said crank shaft below said bearing, a tubular boss extending upwardly from the bottom of the reservoir through which the crank shaft extends and within which the oil seal is positioned, said boss preventing escape of oil from the reservoir, and said boss and bearing holding means sealing all portions of the crank shaft below the bottom of the crank case from oil which has drained into the drain opening in the bottom of the crank case, means in the bottom of the crank case rotatable with said crank shaft above and adjacent to said bearing for centrifugally throwing surplus oil which drains thereon from the crank case into said opening and back into said reservoir, and means for feeding oil from said reservoir to parts in said crank case to be lubricated.

10. In an outboard motor or the like having a combustion engine provided with a crank case and having a crank shaft which is substantially vertically disposed in said crank case when the motor is in normal operating position, said crank case having a bottom formed with a depending tubular portion forming a bearing pocket through which the crank shaft extends, means forming a reservoir for lubricating oil surrounding the lower end of said crank shaft, said reservoir having its bottom formed with an upstanding tubular boss which engages the lower end of the bearing pocket and through which the crank shaft extends, there being a drain opening in the bottom of the crank case located radially outwardly from said bearing pocket and communicating with the reservoir, all portions of the crank shaft below the bottom of the crank case being sealed by said depending tubular portion and upstanding tubular boss from oil draining downwardly through said opening, the top of the reservoir at the forward end thereof having an inwardly extending flange in sealing connection with the front and side walls of the reservoir forming a trap in the forward end of the reservoir of a size to accommodate the major portion of oil normally in the entire reservoir whereby said oil is substantially confined in said trap portion upon forward tilting of the motor.

11. In an outboard motor or the like having a combustion engine provided with a crank case and having a crank shaft which is substantially vertically disposed in said crank case, when the motor is in normal operating position, said crank case having a bottom through which the lower end of the crank shaft extends, a reservoir for lubricating oil positioned below said crank case bottom when the motor is in normal operating position and surrounding said lower end of the crank shaft, there being a drain opening in the bottom of the crank case communicating with said reservoir, means rotatable with the crank shaft and located in the crank case adjacent the bottom thereof for centrifugally throwing surplus oil which drains thereon to said opening, means for sealing all portions of the crank shaft below the bottom of the crank case from oil draining downwardly through said opening, the top of the reservoir at the forward end thereof having an inwardly extending flange in sealing connection with the front and side walls of the reservoir forming a trap in the forward end of the reservoir of a size to accommodate the major portion of oil normally in the entire reservoir whereby said oil is substantially confined in said trap portion upon forward tilting of the motor.

ALFRED S. BOSMA.

Sept. 12, 1944. J. B. FARR 2,357,942

OUTBOARD MOTOR

Filed Feb. 10, 1940 2 Sheets-Sheet 1

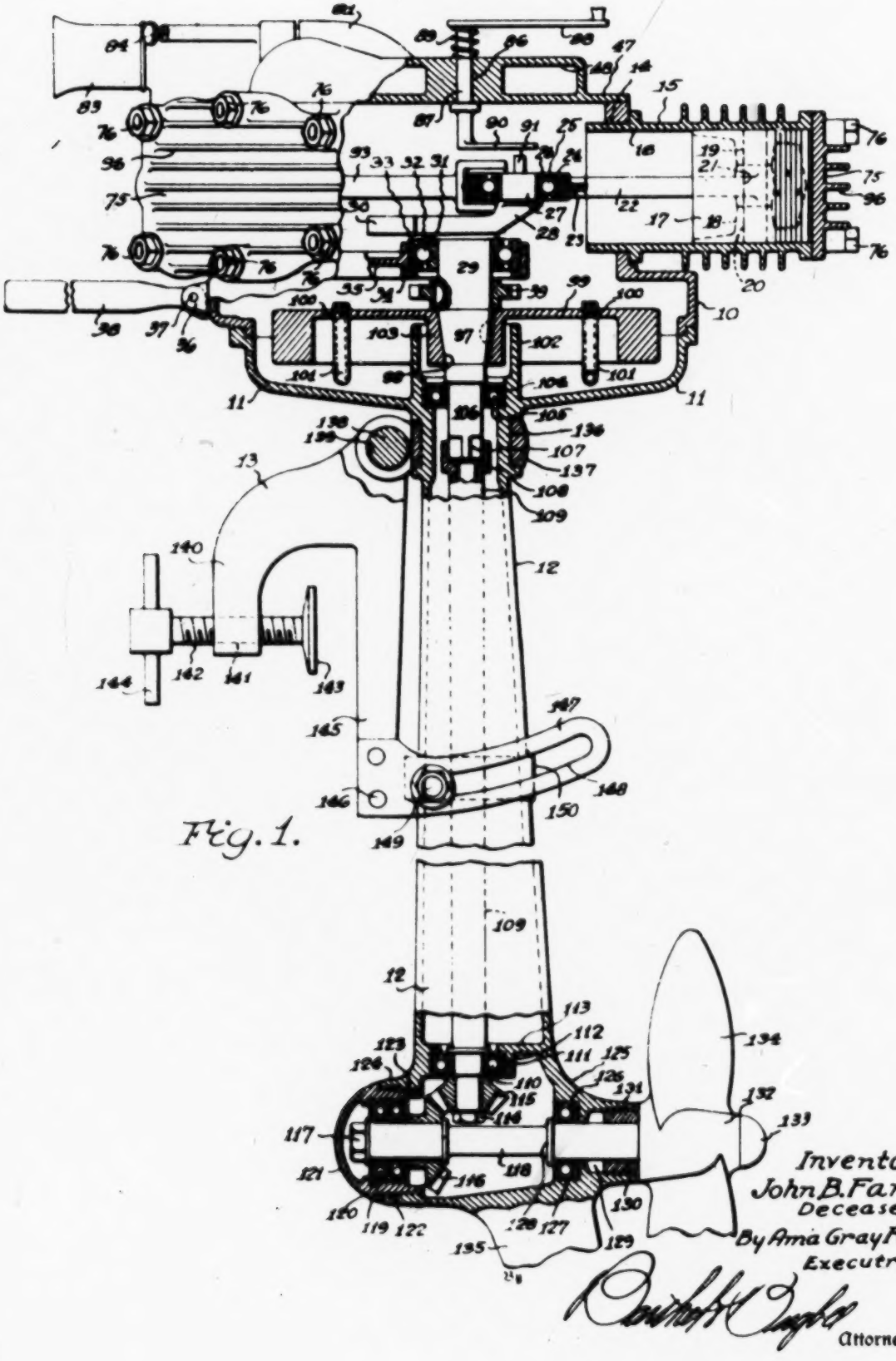

Fig. 1.

Inventor
John B. Farr
Deceased,
By Ama Gray Farr
Executrix.

Attorneys

Sept. 12, 1944. J. B. FARR 2,357,942

OUTBOARD MOTOR

Filed Feb. 10, 1940 2 Sheets-Sheet 1

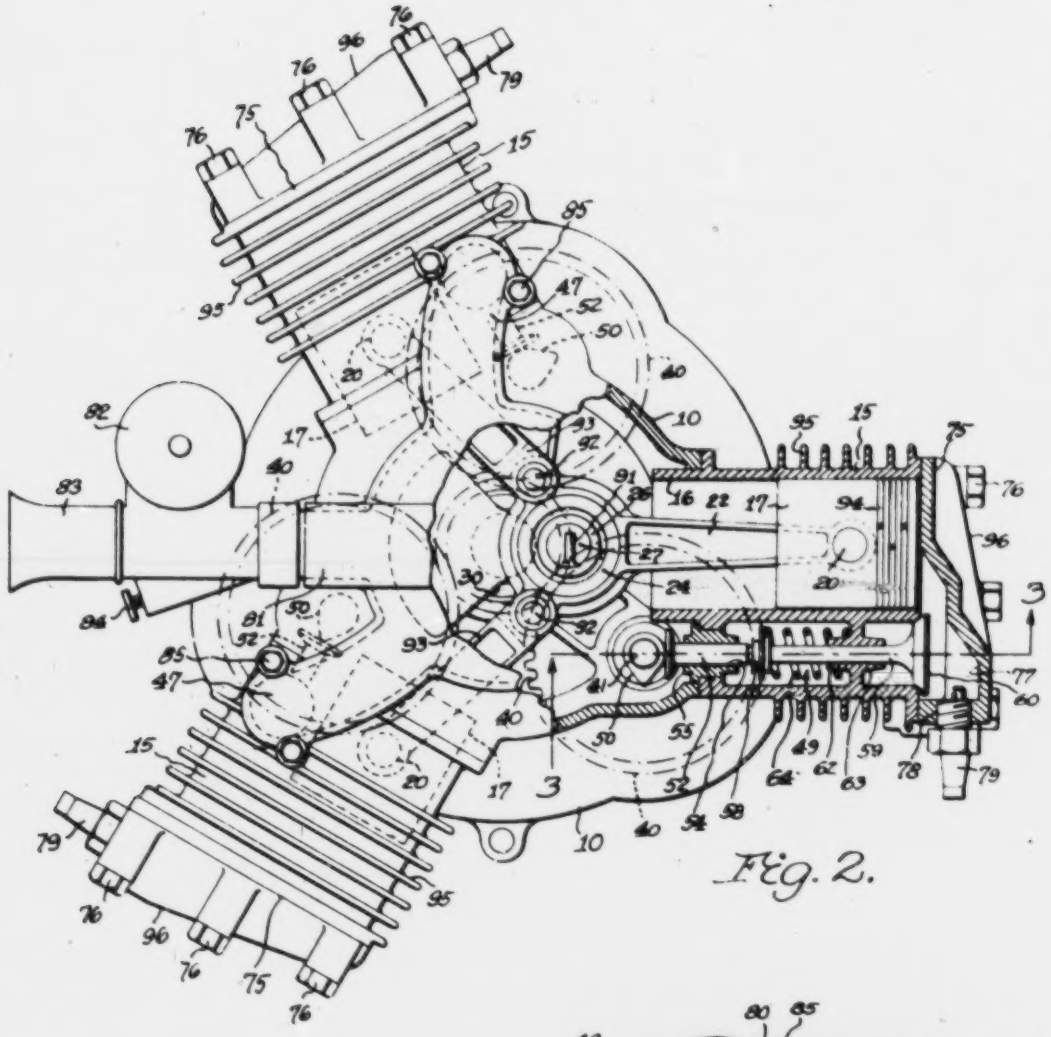

Fig. 2.

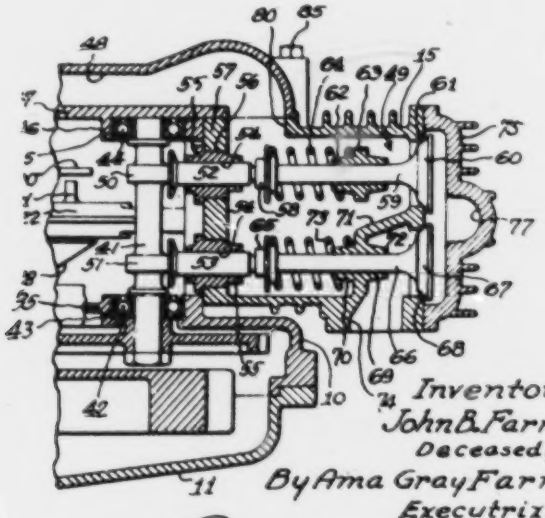

Inventor
John B. Farr
Deceased,
By Ama Gray Farr
Executrix.

Attorneys

Patented Sept. 12, 1944 2,357,942

UNITED STATES PATENT OFFICE

2,357,942

OUTBOARD MOTOR

John B. Farr, deceased, late of Detroit, Mich., by Anna Gray Farr, executrix, Detroit, Mich.

Application February 10, 1940, Serial No. 318,215

3 Claims. (Cl. 123—195)

This invention relates to internal combustion motors and in particular to outboard motors for propelling boats.

One object of this invention is to provide a multiple radial cylinder outboard motor with at least three cylinders wherein the various pistons are secured to a common crank through their connecting rods, this crank being mounted upon a crank shaft which drives the propeller.

Another object is to provide a four cycle radial multiple cylinder outboard motor with at least three cylinders wherein each cylinder is provided with a cam shaft for actuating the intake and exhaust valves, each cam shaft being preferably driven from a common gear on the crank shaft.

Another object is to provide a multiple radial cylinder outboard motor wherein the various piston connecting rods are connected to a half crank mounted on the crank shaft.

Another object is to provide a multiple radial cylinder outboard motor with at least three cylinders having a crank shaft with a half crank carrying an anti-friction bearing to which the various piston connecting rods are connected, so that the bearing, such as a ball bearing, may be mounted on the half crank without being split or otherwise divided.

Another object is to provide a multiple radial cylinder outboard motor with at least three cylinders having the multiple connecting rods connected to a half crank on the crank shaft, the end of this half crank projecting so as to be engaged by a hand operated crank for starting purposes.

Another object is to provide a multiple radial cylinder outboard motor having a vertical crank shaft driven by connecting rods from the multiple cylinders, the crank shaft carrying a fly-wheel beneath the cylinders, this fly-wheel rotating in a horizontal plane and carrying scoop devices which scoop up the oil and throw it upward to various parts of the motor.

Another object is to provide a multiple radial cylinder outboard motor with at least three cylinders having a cover plate on top of the housing, this cover plate having intake manifolds therein for equally distributing the explosive gas mixture to the various intake valves.

Another object is to provide a multiple radial cylinder outboard motor having the intake valve chamber immediately adjacent the exhaust valve chamber and separated therefrom by a thin wall so that the cold incoming gases tend to cool the walls heated by the outgoing exhaust gases.

Another object is to provide a multiple radial cylinder outboard motor having a one piece tubular propeller shaft housing having bearing seats at its opposite ends so that these bearing seats may be machined in accurate alignment without the danger of subsequent misalignment in assembly.

In the drawings:

Fig. 1 is a side elevation, partly broken away in central vertical section, showing a preferred embodiment of the multiple radial cylinder outboard motor according to the invention;

Fig. 2 is a top plan view, partly broken away, of the outboard motor shown in Fig. 1; and

Fig. 3 is a vertical section through the valve structure of a cylinder, taken along the line 3—3 in Fig. 2.

General arrangement

In general, the outboard motor of this invention consists of an approximately circular crank case carrying three or more radial cylinders having pistons connected to an anti-friction bearing mounted upon a half crank, which, in turn, is a part of the vertical crank shaft. This crank shaft, beneath the cylinders, carries a horizontal fly-wheel having scoop elements arranged to scoop up the oil from the crank case or sump and throw it to various parts of the invention. The crank shaft also carries a timing gear which meshes with individual timing gears mounted on an individual cam shaft for each of the several cylinders, this cam shaft operating the intake and exhaust valves of each cylinder. The half crank shaft projects upward so that it is engageable by a hand crank mechanism for starting purposes.

The upper part of the motor above the cylinders is occupied by a cover plate having intake manifolds therein running to the intake valves of the various cylinders. By this means the explosive gas is equally distributed to the various cylinders from the carburetor. Each intake manifold runs to an intake valve chamber which is separated by a thin wall from the exhaust valve chamber so that the cold incoming gases will cool the exhaust valve chamber.

The crank shaft is coupled to a propeller shaft mounted in anti-friction bearings in a one piece tubular housing, the bearing seats of which are machined in accurate alignment. Since the housing is not divisible in manufacture or assembly, this construction insures accurate alignment of the bearings.

The drive housing is mounted in a suitable bracket mechanism attached to the boat by which

the motor may be turned bodily through a complete revolution so that the boat may be reversed or the rudder, attached to the lower portion of the housing, turned through a wide angle.

Detailed construction

Referring to the drawings in detail, Fig. 1 shows a preferred embodiment of the outboard motor of this invention as consisting of a crank case 10 mounted upon the sump portion 11 of the drive housing 12, which, in turn, is pivotally supported upon the bracket 13 by means subsequently to be described.

The crank case 10 is provided with a plurality of radially disposed apertures 14 within which are mounted cylinders 15 having cylinder bores 16 containing pistons 17. The pistons 17 are provided with internal bosses 18 having aligned bores 19 carrying the wrist pins 20.

The wrist pins 20 are engaged by the bores 21 in the end of the connecting rod 22, the opposite end of which is provided with a bore 23 surrounding and containing the outer element 24 of an anti-friction bearing 25. The inner element 26 of the latter is mounted upon the portion 27 of the half crank 28 forming a part of the crank shaft 29. The half crank 28 is provided with an oppositely projecting counterweight portion 30 for counterbalancing the thrust of the crank.

The crank shaft 29 carries the inner element 31 of an anti-friction bearing 32, the outer element 33 of which is supported in a recess 34 within the spider 35 forming a part of the crank case 10. The latter is provided with an integral yoke portion 36 carrying a pivot pin 37 upon which is mounted a pivot handle 38 by which the motor may be swung to and fro by the operator around a vertical axis, for steering or reversing purposes.

Keyed to the crank shaft 29 is a timing gear 39 which meshes with gears 40 (Figs. 2 and 3) mounted on the cam shafts 41. Each cylinder 15 is provided with its own individual cam shaft, the lower end of which is mounted in the anti-friction bearings 42 supported in recesses 43 in the spider 35 of the crank case 10 (Fig. 3). The upper end of each cam shaft is mounted in anti-friction bearings 44 supported in the recess 45 formed in the boss 46. The bosses 46 project downwardly from the cover plate 47, the latter also containing intake manifold passageways 48 leading to the intake valve chambers 49 in each cylinder 15. The cam shafts 41 are provided with intake and exhaust valve cams 50 and 51, respectively, serving to actuate the valve tappets 52 and 53, respectively, mounted in the bores 54 of the collars 55. The latter, in turn, are mounted in the bores 56 within the partition portions 57 forming a part of the cylinder 15 (Fig. 3). The valve tappets 52, actuated by the cams 50, engage the enlargements 58 upon the ends of the intake valves 59 having valve heads 60 engaging valve seats 61 in the cylinders 15. The intake valve 59 is reciprocably mounted in a bore 62 within the spider 63 extending across the intake chamber 49. A coil spring 64 urges the intake valve 59 toward its closed position.

The valve tappet 53 engages an enlargement 65 upon the end of the exhaust valve 66 having a head 67 engaging exhaust valve seat 68. The exhaust valve 66 is reciprocably mounted in a bore 69 within a boss 70 forming a part of the partition wall 71 between the intake chamber 49 and the exhaust chamber 72 (Fig. 3). The exhaust chamber 66 is simply provided with a coil spring 73 urging it into a closed position. The exhaust valve chamber 72 is provided with an exhaust port 74 to which an exhaust manifold (not shown) may be connected in any conventional way, and leading either to a conventional muffler or to an underwater exhaust. These elements are omitted to simplify the disclosure.

The cylinder bores 16 of the cylinders 15, at their outer ends, are closed by the cylinder heads 76 bolted thereto as at 76 and containing the ignition chambers 77 having threaded bores 78 containing the spark plug 79. The energization of the spark plugs 79 is effected by electricity supplied from a conventional spark coil or magneto (not shown) through a conventional timer and distributer (not shown) mounted on the upper end of one of the cam shafts 41. This timing and distributing mechanism is likewise omitted for purposes of simplifying the showing.

Each of the intake chambers 49 is provided with an intake port 80 from which the intake manifold passageways 48 lead to the carbureter connecting portion 81 to which is attached the carbureter 82. The latter is provided as usual with an air intake portion 83 and an adjusting screw 84 for adjusting the needle valve.

The cover plate 47 containing the exhaust passageways 48 is bolted as at 85 to the cylinders 15. The cover plate 47 is likewise provided with a vertical bore 86 containing the shaft 87 on one end of which is mounted the manually operated starting crank 88. A coil spring 89 urges the shaft 87 and crank 88 upward. The other end of the shaft 87 carries an arm 90 engageable with a projection 91 upon the crank portion 27. The projection 91 is wedge-shaped (Fig. 2) so as to permit the arm 90 to be thus disengaged automatically when the motor starts.

Connecting rod 22 is a master connecting rod which is provided with pivot pins 92 to which the connecting links or secondary connecting rods 93 are pivotally connected. Opposite ends of the secondary connecting rods 93 are pivotally connected to the wrist pins 20 of the pistons 17 in the manner previously described. The pistons 17 are provided with the usual piston rings 94 for the prevention of leakage between the pistons 17 and the cylinder bore 16. The cylinders 15 are provided with the usual cooling fins or flanges 95 with corresponding fins 96 upon the cylinder heads 76.

The crank shaft 29 is provided with a tapered portion 97 engaged by the correspondingly tapered bore 98 of the fly-wheel 99 keyed thereto. The fly-wheel 99 is provided with bores 100 within which are secured the downwardly extending scoop tubes 101. The latter project slightly above the top of the fly-wheel 99 and, in the rotation of the latter, serve to pick up oil from the sump portion 11 and throw it upward to the various moving parts of the motor.

The sump portion 11 is provided with an upwardly projecting annular flange 102 surrounding the fly-wheel hub 103 and serving to prevent the escape of lubricant. The sump portion 11 within the flanged portion 102 is provided with a recess 104 serving to receive the outer element of an anti-friction bearing 105, the inner element of which is mounted upon the reduced diameter portion 106 of the crank shaft 29.

The crank shaft portion 106 terminates in a

coupling portion 107 having cooperating ridges engaging a corresponding coupling socket 108 in the upper end of the drive shaft 109. The latter is preferably tubular and at its lower end carries the inner element of an anti-friction bearing 110, the outer element of which is supported in a recess 111 in the boss 112 forming a part of the partition 113 in the lower end of the drive housing 12 (Fig. 1).

Secured, as at 114, to the lower end of the drive shaft 109 is a bevel gear 115 meshing with a bevel gear 116 secured, as at 117, to the propeller shaft 118. One end of the propeller shaft 118 is mounted in double anti-friction bearings 119 supported in a recess 120 formed in the drive housing cap 121. The latter is threaded, as at 122, into the bore 123 in the projecting portion 124 at the lower end of the drive housing 12.

The drive housing 12 also is provided with a projecting portion 125 (Fig. 1) provided with a recess 126 containing an anti-friction thrust bearing 127 which is engaged by the enlargement 128 on the propeller shaft 118. The latter is provided with a packing 129 compressed by a gland 130 threaded into the bore 131. The outer end of the propeller shaft 118 is provided with a screw propeller 132 secured thereto, as at 133, and having propeller blades 134. Formed integrally with the drive housing 12 is a downwardly projecting fin or rudder 135.

The upper end of the drive housing 12 is provided with an annular recess 136 loosely receiving an annular member 137 carrying a pivot pin 138. Engaging the pivot pin 138 is the bore 139 formed in the upper end of the bracket 13 which has an outwardly extending arm structure 140 provided with threaded bores 141 carrying a pair of clamping screws 142, each being provided with a head 143 and handle 144 for clamping the motor to a boat (in Fig. 1 the two clamping screws 142 are in horizontal alignment and hence only one is visible.)

The bracket 13 is likewise provided with a downwardly extending arm structure 145 to which are secured, as at 146, spaced arms 147 containing arcuate slots 148 having their centers of curvature at the center of the pivot shaft 138. The slots 148 are engaged by adjusting bolts 149 seated in annular members 150 loosely mounted upon the casing 12 in a manner similar to the annular membr 137. In this manner the motor may be swung completely around by grasping the handle 38. The bolts 149 also permit an adjustment of the motor and a tilting relatively to the vertical plane.

The drive housing 12 is preferably of streamlined cross-section so as to offer the minimum resistance in its passage through the water. For this purpose, the leading edge is rounded and the trailing edge is thin and fin-shaped.

Operation

The operation of the invention has been described, in part, in connection with the description of the construction thereof. The operator starts the engine by rotating the hand crank 90 after pushing it downward into engagement with the projection 91 on the half crank 26. Assuming that the carbureter 82 has been supplied with fuel and the timing apparatus and spark plugs 79 energized from a suitable source of electricity, the explosions take place in timed sequences within the cylinders 15.

While the explosions are taking place within the cylinders 15, the cam shafts 41 are being rotated so as to open and close the intake valves 66 and exhaust valves 67 in accordance with the predetermined cycle of operation, according to the four-cycle plan. Thus the piston 17 makes one complete stroke upon its explosion and exhaust half strokes and a successive complete stroke upon its intake and compression half strokes. This cycle of operations is repeated indefinitely according to the desires of the operator.

As the explosion stroke of each cylinder occurs, the thrust of each piston 17 is communicated to the half crank 26 of the crank shaft 28 by the engagement of the main connecting links 93 with the anti-friction bearing 29. This rotation is transmitted to the drive shaft 109 through the coupling members 107 and 108 and, thence, to the screw propeller 132 through the shaft 118 and bevel gearing 115 and 116.

Meanwhile, the rotation of the fly-wheel 99 causes the scoop tubes 101 to pick up oil from the sump portion 11 and throw this oil upward to lubricate the various bearings and the cylinder bores 16.

The exhaust valve chamber 72 is cooled by the incoming gas passing through the intake chamber 69. This occurs by reason of the contact of the cool incoming gas with the thin partition 71 between the two chambers.

The motor may be adjusted as to position by manipulating the bolts 149, thereby allowing for any tilt at which the bracket structure 13 must be set in the particular boat.

To steer the boat, the operator merely swings the handle 39, thereby swinging the motor and its connected parts, including the drive housing 12, screw propeller 132, and the rudder 135. To reverse the boat, the operator merely swings the handle 39 through a half revolution, so that the screw propeller 132 is directed forward instead of rearward, as shown in Fig. 1. The bearing ring members 137 and 150 permit this wide angle swinging of the motor assembly relatively to the bracket structure 13.

The term "outboard motor" used herein is defined as a small internal combustion engine with propeller attached, temporarily secured to the stern of a small boat.

While a specific embodiment of the invention has been described and illustrated, it will be understood that various modifications may be made within the scope of the appended claims without departing from the spirit of the invention.

What is claimed is:

1. In an outboard motor, a crank case having a closure plate to provide an end wall therefor, a plurality of removable cylinders disposed radially about said crank case, pistons reciprocably mounted in said cylinders, a crank-shaft journaled in one wall of said case, a cantilever crank pin on the crank shaft having its end terminating within the confines of the cylinders and spaced from the end wall closure plate a sufficient distance to provide clearance therebetween, and a connecting rod assembly mounted said crank pin being drivingly connected to said piston, said clearance space being so proportioned as to admit the removal of the connecting rod assembly laterally from the crank pin after the cylinders have been removed from the crank case.

2. In an outboard motor, a crank case having an open end provided with a closure plate, a plurality of removable cylinders disposed about the

May 8, 1945. W. G. WINKELS ET AL 2,375,718

CRANKCASE AIR-PRESSURE CONTROL MEANS

Filed April 23, 1943

FIG. 1.

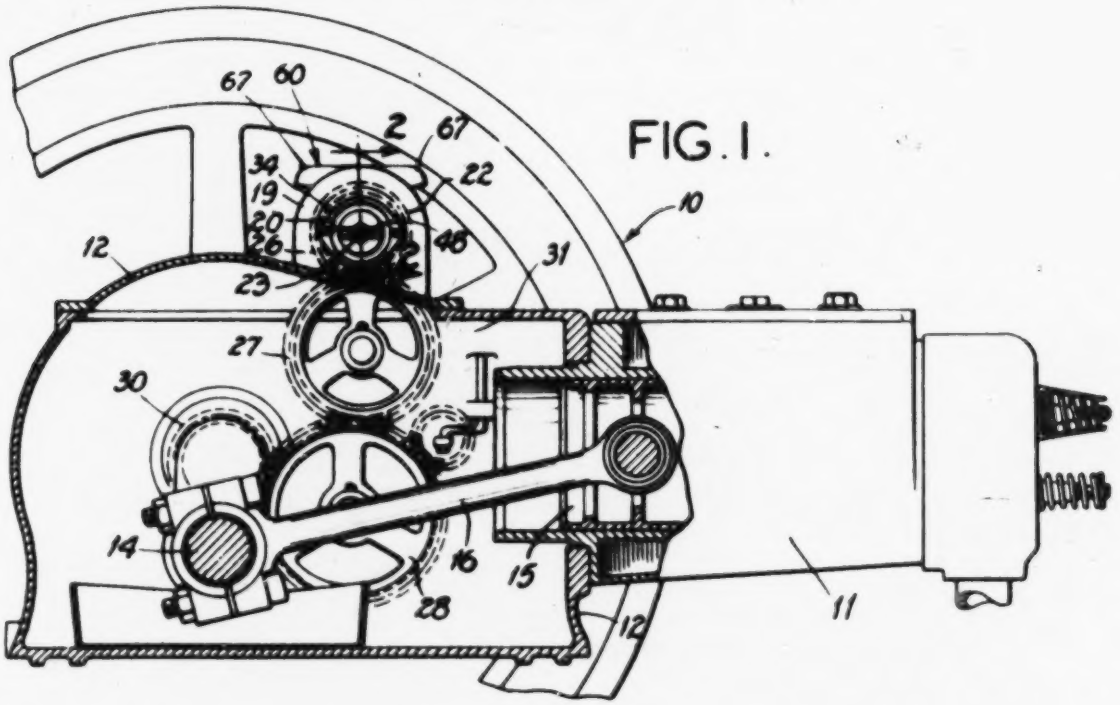

FIG. 2.

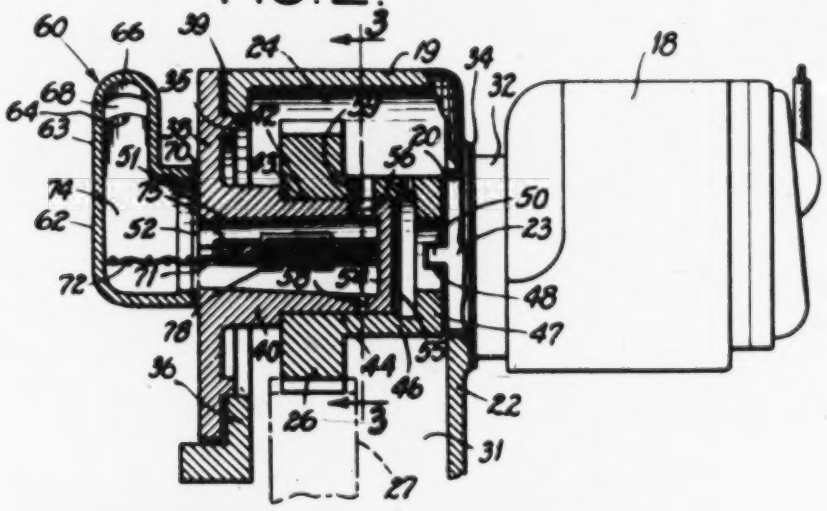

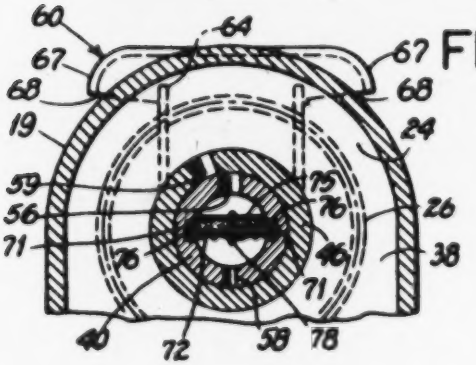

FIG. 3.

INVENTORS
WALTER G. WINKELS
THOMAS W. ASHCROFT
BY Paul L. Kho
ATTORNEY

P-352

crank case and extending radially therefrom, pistons mounted in said cylinder, a crank shaft journaled in said crank case, a cantilever crank pin on said crank shaft having its end terminating within the confines of the cylinders and spaced from the closure plate a sufficient distance to provide a clearance space therebetween, and a connecting rod assembly mounted on said crank pin connecting said pistons with said crank pin, said clearance space being so proportioned as to permit removal of the connecting rod assembly laterally from the crank pin after the cylinders have been removed from the crank case.

3. In an outboard motor, a crank case having an end wall, a series of cylinders radially disposed about said crank case, pistons reciprocably mounted in said cylinders, a crank-shaft journaled in said crank case, a cantilever crank pin on said crank shaft within the confines of said cylinders with its end terminating a sufficient distance from the end wall to provide a clearance space, and a connecting rod assembly mounted on said crank pin comprising a main connecting rod connected to one of the pistons, and a plurality of secondary connecting rods connecting the remaining pistons to said main connecting rod, said clearance space being so proportioned to admit removal of the connecting rod assembly laterally from the crank pin after the cylinders have been removed from the crank case.

AMA GRAY FARR,
Executrix.

UNITED STATES PATENT OFFICE

2,388,994

CENTRIFUGAL SPARK CONTROL MECHANISM FOR FLYWHEEL MAGNETOS

Russell E. Phelon, West Springfield, Mass., assignor to Wico Electric Company, West Springfield, Mass., a corporation of Massachusetts

Application August 11, 1944, Serial No. 549,091

3 Claims. (Cl. 64—25)

This invention relates to an automatic spark advance mechanism for flywheel magnetos.

The problem of providing in a flywheel magneto for the automatic control of the spark in response to variations in engine speed, is difficult because of the lack of space within the flywheel and, particularly is this so in the very small flywheels, which are now frequently used and are only a few inches in diameter. The small space within these small flywheels is so crowded with magneto parts that there is no room left for governor weights of any substantial size nor is there room for such weights to swing.

This invention has been devised to provide, in a flywheel magneto of an automatic spark control mechanism, in which the governor weights or weights are located outside the flywheel, where they may be as large as is necessary to get effective action and where there is ample room for these weights to swing, and in which the part within the flywheel occupies so small a space as to be for all practical purposes negligible.

This invention will be disclosed with reference to the accompanying drawings, in which

Fig. 1 is an end elevational view of a flywheel magneto embodying the invention;

Fig. 2 is a sectional view, looking in the same direction as Fig. 1 and showing the magneto elements housed within the flywheel, the spark timing mechanism being shown in retarded position;

Fig. 3 is a sectional view taken on the line 3—3 of Fig. 2; and

Fig. 4 is a fragmentary sectional view taken similarly to Fig. 2 but showing the spark timing mechanism in advanced position.

Referring to these drawings, the spark timing mechanism of this invention includes a governor weight 1 (Fig. 1) fixed to the outer end of a small shaft 2, which is rotatably mounted in the hub of a flywheel 3 (Fig. 3) and is located parallel with the axis of the flywheel. A spring 4 (Fig. 1) interconnects an outer corner of weight 1 to any suitable fixed point in the end wall of the flywheel, as shown, to one of a series of fan blades 5 formed on said wall. The spring 4 tends to hold weight in the position illustrated by full lines in Fig. 1 in which position the weight abuts a limit stop 6 fixed in said wall of the flywheel. Another and similarly fixed limit stop 7 is adapted to be engaged by the weight 1, when it is swung outwardly by centrifugal force, to limit the outward movement of the weight to the position shown by dotted lines in Fig. 1. The inner end of shaft 2 (Fig. 3) is formed with an integral crank 8, the crankpin portion of which is engaged in a longitudinally directed slot 9 in the breaker-point cam of the magneto. As the governor weight 4 moves from the full line position to the dotted line position of Fig. 1, the breaker point cam is moved from the full retard position shown in Fig. 2 to the full advance position shown in Fig. 4

The invention has been shown, by way of illustrative example, in connection with a flywheel magneto of the type disclosed in the Harmon Patent No. 2,101,392, granted December 7, 1937. This magneto will be briefly described herein, reference being had to said patent for a full disclosure if such is necessary or desired. In the following description, the reference numerals indicate the same parts as in the patent.

The field structure is fastened in the rim portion 10 of the flywheel and consists of a permanent magnet 11 and laminated pole shoes 12. The stator comprises a laminated structure having three legs 13, 14, and 15, integrally united at their inner ends and having their outer ends shaped to cooperate with the surfaces 16 of pole shoes 12 during rotation of the rotor. Primary and secondary coils 17 and 18 are mounted on the leg 14. The relatively fixed and movable breaker points are respectively shown at 19 and 20. The point 19 is fixed to and insulated from a bracket 21. The point 20 is fixed to one end of a breaker lever 22, pivoted at 23 and having its other end riding on the periphery of a breaker cam 24. This cam, unlike the cam of the patent, is free to turn on the engine crankshaft 25, being relatively moved as, and to the extent, above described. The flywheel 1 is fixed to the crankshaft 25. The breaker lever 22 has a spring 26 urging it towards cam 24 and the latter has a low surface 27 which allows the breakers 19 and 20 to close, the remainder of the cam being such as to hold the breaker points open. The condenser is shown at 28 and 29 is the electrical connection from the ungrounded terminal of the primary coil to the insulated terminals of the condenser 28 and to the insulated breaker point 19. 30 is the high tension wire leading from the ungrounded terminal of the secondary coil. The core structure is fixed by cap screws 31 to a stator plate 32, which in turn is fixed by screws 33 to a part 34 of the engine crankshaft.

The operation of the magneto is the same as that of the patent except that the governor arrangement, first above described, affords an automatic spark advance. The magneto is

Nov. 13, 1945. R. E. PHELON 2,388,994

CENTRIFUGAL SPARK CONTROL MECHANISM FOR FLYWHEEL MAGNETOS

Filed Aug. 11, 1944 2 Sheets-Sheet 2

Fig. 2.

Fig. 4.

INVENTOR
RUSSELL E. PHELON
BY Clarke & Neal
ATTORNEYS

Nov. 13, 1945. R. E. PHELON 2,388,994

CENTRIFUGAL SPARK CONTROL MECHANISM FOR FLYWHEEL MAGNETOS

Filed Aug. 11, 1944 2 Sheets-Sheet 1

Fig. 1.

Fig. 3.

INVENTOR
RUSSELL E. PHELON
BY Clapp & Neal
ATTORNEYS

chambered outlet attachment in registry with the open end of said chamber, an engine controlled valve on said member, adapted for opening one of said ports to the crankcase interior in the period of piston developed pressure in the crankcase, for permitting discharge of lubricant laden crankcase air through said chamber and said chambered outlet attachment, and means including the chambered outlet attachment, effective for condensing and collecting lubricant from the crankcase air discharged through said chamber and attachment, said valve being effective in the period of crankcase suction, to open the other of said ports for the suction return to the crankcase of lubricant collected by said means.

8. The combination with an internal combustion engine providing an engine driven gear in the crankcase for operating a device adjunctive to the engine organization, of a crankcase air-pressure control device comprising a member extending within the crankcase and providing a bearing support for said gear and hub extension, said member providing a chamber therein open to the atmosphere and spaced ports for communication with the crankcase interior, said gear being adapted as a control valve for said ports, operable for opening one of said ports to the crankcase interior in each period of piston developed pressure in the crankcase, and for opening another of the ports thereto in each period of piston developed suction in the crankcase.

9. The combination with an internal combustion engine providing an engine driven gear in the crankcase having a hub extension for driving connection with a device adjunctive to the engine organization, of a crankcase air-pressure control device comprising a member extending within the crankcase and providing a bearing support for said gear and hub extension, said member providing a chamber therein open to the atmosphere at its outer end, and having spaced ports near the inner end of the chamber, underlying the hub extension of said gear, and said gear hub extension having an opening therein registrable with said ports during gear rotation, provided for opening said ports to the crankcase interior in each cycle of piston developed pressure and suction in the crankcase, such that one of said ports is opened thereby in the period of piston developed pressure and another port opened in the period of piston developed suction.

WALTER G. WINKELS
THOMAS W. ASHCROFT

the foregoing description of operation, it
ear now that the control device in its
to relieve crankcase compression in the
sion cycle of engine piston operation, and
nt suction return of air to the crankcase
cle of piston suction effect in the crank-
ords a fully effective means for control-
nkcase air pressures to the extent that
nts existence of above-atmospheric pres-
rein, and facilitates maintenance of sub-
heric or even a slight negative pressure
t vacuum in the crankcase during at least
ter portion of each complete cycle of en-
ton operation. As a consequence of the
ospheric pressures or slight vacuum thus
hed in the crankcase, the crankcase lubri-
fluid is most effectively retained therein
leakage or loss to the crankcase exterior,
ugh cylinder ports, crankcase joints, and
ch operating parts of the engine which
through wall portions of the crankcase
sulting suction retention of lubricating
the crankcase, together with the return
of fluid condensed and otherwise re-
from the crankcase air vented to atmos-
hrough the present novel control device
ely conserves the crankcase lubricating
an important degree, as will be now fully
ated.

present crankcase air-pressure control de-
lly attains the objects herein expressed,
ditionally presents a relatively compact
nism having but few parts, and wherein
rating valve element thereof is embodied
ference in the engine driven magneto
ear of the engine assembly illustrated
h the device is shown herein as applied
ove extension of the crankcase for con-
in effecting the illustrated drive connec-
the engine magneto located externally
the crankcase, it will be understood that
vice may be readily located in any other
f the crankcase with appropriate reloca-
the engine shaft drive connection to the
port-control element 25 of the device.

le the present disclosure relates to a single
ed embodiment of the invention, it will be
tood that alterations or modifications
may be made without departing from the
and intended scope of the invention as de-
by the appended claims.

claim:

control device of the character described
substantially closed crankcase, comprising
providing a chamber open to the atmos-
means including a valve for establishing
pheric communication with the crankcase
h said chamber at least once in each cy-
developed pressure and suction in the
ase, and means controlled by the valve
tablishing in the suction period of said
communication between said chamber and
ankcase.

A control device of the character described
substantially closed crankcase, comprising
mber having a chamber therein open to the
phere and provided with spaced ports for
unication with the crankcase interior, and
means operatively supported by said mem-
dapted for opening said ports to the crank-
nterior in each cycle of developed pressure
uction in the crankcase, such that one of
ports is thereby opened in each period of
oped pressure and the other port opened
in each period of developed suction in the crank-
case.

3. A control device of the character described for a substantially closed crankcase, comprising a member extending within the engine crankcase and provided with a chamber therein open to the atmosphere, said member having spaced ports communicating with said chamber, valve means in control of said ports and operable for successively opening the ports to the crankcase interior, and valve actuating means for operating said valve means in timed relation to the cycle of developed pressure and suction in the crankcase, the operation of said valve means thereby serving to open one of said ports in the periods of piston developed pressure and the other port in the periods of piston developed suction in the crankcase.

4. A crankcase air-pressure control device for internal combustion engines, comprising a member extending within the engine crankcase and provided with a chamber therein open to the atmosphere, said member having spaced ports communicating with said chamber, an element rotatable on said member in a position to overlie said ports and having an opening therein located for registry with said ports, said element during rotation serving through said opening therein, to open said ports to the crankcase interior, and engine controlled means for operating said element in timed relation to the cycle of piston developed pressure and suction in the crankcase, the operation of said element thereby serving to open one of said ports in the periods of piston developed pressure and the other port in the periods of piston developed suction in the crankcase.

5. A crankcase air-pressure control device for internal combustion engines, comprising a member providing a lubricant condensing chamber for lubricant-laden air, said chamber being open to atmosphere and having spaced ports for communication with the crankcase interior, and engine controlled valve means in control of said ports adapted for opening one of said ports in the period of piston developed pressure in the crankcase, to permit passage of lubricant-laden crankcase air through said condensing chamber, and for opening the other of said ports in the period of crankcase suction, to effect suction return to the crankcase of lubricant condensed in said chamber.

6. A crankcase air-pressure control device for internal combustion engines, comprising a member projecting within the engine crankcase and having a chamber therein open to the atmosphere, said member being provided with spaced ports affording communication between the chamber and the crankcase interior, lubricant collector means in said chamber, and an engine actuated rotary valve on said member, effective for opening one of said ports in the period of piston developed pressure in the crankcase, to permit discharge of lubricant-laden crankcase air through said chamber, and for opening the other of said ports in the period of crankcase suction, to effect suction return to the crankcase of lubricant collected in said chamber by said collector means.

7. A crankcase air-pressure control device for internal combustion engines, comprising a member extending into the engine crankcase and providing a chamber therein open to the crankcase exterior, said chamber having spaced ports for communication with the crankcase interior, a

projecting horizontally and inwardly therefrom, is a gear support or spindle 40 which by preference, is formed integrally with the closure. The spindle is reduced as at 42 to provide a shoulder 43 and a gear journalling seat 44 over the inner longitudinal end portion of the spindle. Gear 26 rotatably received on spindle seat 44 and against shoulder 43, is formed to provide a cylindrical hub extension 46 having an end wall 47 transversely notched or recessed as at 48, for driving connection to the magneto shaft coupling 23 by means of coupling lugs 50 engaged in the gear hub recesses 48 (Fig. 2).

The spindle 40 is interiorly recessed longitudinally thereof, to provide a chamber 51 open at its outer end 52 and closed at its opposite or inner end 54 by a spindle end wall 55, the chamber as shown by Figs. 2 and 3, preferably being of cylindrical form and tapered convergently toward the open end 52 thereof. Communication between the spindle chamber 51 and the chamber 24 in the crankcase extension 19, is effected through an upper inlet port 56 through the spindle wall at the inner end 54 of the chamber 51, and a diametrically opposite outlet port 58 of lesser capacity. The hub extension 46 of gear 26 which overlies the spindle portion in which the ports 56 and 58 are located, is here utilized as a rotary valve element for controlling port communication with the chamber 24 of the crankcase extension 19. To this end, the gear hub is provided with an aperture 59 preferably of a diameter equivalent to the diameter of the larger port 56 in the spindle, located for successive registry with the ports 56 and 58 during rotation of the gear 26.

A discharge or outlet attachment generally indicated at 60, is suitably removably secured on the external face of the closure member 38 in registry with the open end 52 of the spindle chamber 51, and includes a casing 62 and an upwardly directed discharge neck 63 open at its upper end 64. A protective cap or hood 66 overlying the open end of discharge neck 63 and projecting laterally on opposite sides thereof, as at 67 (Fig. 3), provides for downward air discharge through the openings 68. As indicated, the attachment casing 62 is sealed in its assembly connection to the closure 38 as by a suitable gasket element 70.

Opposed longitudinal channels 71 in the walls of the spindle chamber 51, afford a support for a removable screen 72 preferably of coarse wire mesh which extends horizontally through the chamber 51 and the chamber 74 provided by the attachment casing 62. Bearing on the upper surface of the screen 72 within the chamber 51 is an oil-absorbent member of felt pad 75 which may have its longitudinal margins 76 compressed in the channels 71 as shown. The pad further may be attached directly to the screen by a suitable clasp or staple element 78, so that the screen and pad may be inserted or removed as a unit.

In the operation of the presently improved crankcase air control device, the gear 26 is set initially such that its hub valve aperture 59 is in full registry with the upper spindle port 56, when the engine piston is near the crank end of its stroke. Thereafter and during engine operation, the gear 26 rotated from the crankshaft at engine speed, will establish successively, a relatively short-period opening of the crankcase chamber to the atmosphere through the chamber 24 of crankcase extension 19, gear valve aperture 59 in register with spindle port 56, spindle chamber 51, chamber 74 of attachment or shield 60, and through neck 63 and openings 68, and a somewhat shorter-period opening of the crankcase chamber to the spindle chamber 51 in the zone of chamber port 58, through registry of the gear hub aperture 59 with the port 58, occurring one-half a revolution later and as the piston approaches the head end of its stroke. In the first stage of its cyclic function as above indicated, and when there is a tendency for the air in the crankcase to be under a pressure slightly above atmospheric as a result of piston displacement toward the crank end of its stroke, the control device then becomes effective to vent to atmosphere some of the crankcase air, whereby to relieve the slight, above-atmospheric air pressure in the crankcase so as immediately to restore the crankcase air pressure to atmospheric or subatmospheric value. Since in the normal function of the engine, some oil will be entrapped in the air thus released, this oil must be removed in the compression-relieving process. To this end, the spindle chamber 51 through which the oil-laden crankcase air passes, serves in the presently preferred embodiment of the device, as an oil condensing chamber for removing some of the oil from the air vented therethrough. The oil thus condensed in the chamber, collects on and is absorbed by the felt pad 75 on screen 72, and hence is prevented from passing to the exterior of the device. The felt pad 75 being centrally disposed in chamber 51 and hence directly in the path of air flow therethrough, is of itself an effective agency for direct absorption of oil particles entrapped in the air vented through the chamber. Thus by the condensing function of the chamber 51 and the oil absorbing action of the pad 75 therein, a major portion of the oil in the vented crankcase air, will be removed for ultimate return to the crankcase. Such small portion of oil as may remain in the air attaining the chamber 74 and neck 63 of the attachment 60, will be condensed therein and will collect in the zones of chambers 74 and 51 below the screen 72. Similarly, oil accumulated by the absorbent pad 75 ultimately will drip through the screen into the lower portion of chamber 51. It is to be noted that the wire mesh screen 72 has an important function in the present assembly, in that it effectively prevents the air vented to atmosphere through the chambers 51 and 74, from picking up any of the oil accumulating below the screen.

In the second stage of the operational cycle, the gear aperture 59 registers with the lower spindle port 58 as the engine piston approaches top dead center and when there is a slight but appreciable suction or negative pressure in the crankcase as a consequence in part, of such piston displacement. Upon opening of the port 58, the oil accumulated in the chamber below the screen 72 and collecting in the zone of the port 58 by reason of the tapered form of chamber 51, will be returned by suction through port 58 and gear aperture 59 into the chamber 24 of crankcase extension 19, and thence into the engine crankcase. In the normal and intended function of the device, atmospheric air will not be drawn into the crankcase in this stage of operation, this by reason of the limited capacity of the port 58 and the relatively short period in which it is opened to the crankcase by valve port 59, which thus enables the lubricant pool in chamber 51 and above the port 58, to act as an air seal even during the suction return of a portion thereof to the crankcase.

UNITED STATES PATENT OFFICE

2,375,718

CRANKCASE AIR-PRESSURE CONTROL MEANS

Walter G. Winkels, United States Navy, and Thomas W. Ashcroft, Beloit, Wis., assignors to Fairbanks, Morse & Co., Chicago, Ill., a corporation of Illinois

Application April 23, 1943, Serial No. 484,194

9 Claims. (Cl. 121—194)

This invention relates to crankcase air-pressure control means, and more particularly to an improved device for controlling air-pressure within a substantially closed crankcase of an internal combustion engine, pump, compressor or the like.

A principal object of the present invention resides in the provision of a novel and effective control device for substantially closed crankcases of engines and the like, which affords crankcase compression relief and air-pressure control in a manner generally to prevent above-atmospheric air pressures within the crankcase during engine operation, and more particularly, to facilitate maintenance of sub-atmospheric pressures in the crankcase, even to the extent of a slight negative pressure or partial vacuum therein, throughout at least a greater portion of each cycle of engine piston operation, whereby there is thus prevented or very materially reduced such loss of lubricating fluid from the crankcase interior, as otherwise would tend to occur by reason of above-atmospheric air pressure in the crankcase tending to force lubricant outwardly, as through cylinder ports, crankcase joints, and past such operating parts of the engine which extend through wall portions of the crankcase.

Another object of the invention resides in the provisions of a relatively compact and effective crankcase air control device of the character indicated, adapted for controlling the pressure within the crankcase by affording periodic air release from the crankcase during engine operation, wherein the device embodies a lubricant condensing chamber and lubricant absorbing means therein, for the removal of lubricant from the crankcase air released through the device, and controlled means for effecting return of the lubricant thus removed, to the crankcase.

A further object of the invention is to provide an improved device for the purpose indicated, which utilizes an operating part of the engine as an active element of the device, and which provides an oil entrapping and condensing shield at the outlet thereof, for inserting against discharge of oil particles into the atmosphere about the engine.

Other objects and advantages of the invention will appear from the following description of a preferred embodiment thereof as exemplified in the accompanying drawing, in which:

Fig. 1 is a longitudinal elevation partly in section, of an internal combustion engine embodying the presently improved crankcase air control device;

Fig. 2 is an enlarged sectional elevation of an upper portion of the crankcase, as taken from the line 2—2 in Fig. 1, showing the crankcase device therein, the view also illustrating a magneto device in driven connection with a drive gear in the crankcase portion shown, and

Fig. 3 is a sectional elevation through the device as viewed from line 3—3 in Fig. 2.

Referring to the drawing by suitable characters of reference, the improved control device in the embodiment presently preferred and herein illustrated, is shown by way of an example of its application, in association with an internal combustion engine of closed crankcase type, indicated generally at 10. Briefly, the engine shown by Fig. 1 includes a frame assembly providing a cylinder 11 and a crankcase 12, a crankshaft 14 in the crankcase, a piston 15 operable in cylinder 11, and a connecting rod 16 between the piston and crankshaft. A magneto generator 18 (Fig. 2) provided for supplying engine ignition current, is arranged externally to and preferably above the crankcase 12 adjacent an upward extension 19 of the crankcase. An opening 20 in one wall 22 of crankcase extension 19 affords projection of the magneto shaft coupling element 23 into the chamber 24 provided by the extension 19, for driven connection with a gear 26 therein forming an element of a gear train comprising cooperating gears 26, 27, 28 and 30. The latter gear 30 is located on and driven by the crankshaft 14, so that the magneto is operated from the crankshaft through the described gear train. For a purpose hereinafter to appear, the gear-drive ratio of the gear train is such that the gear 26 and hence the magneto shaft, will be rotated at engine crankshaft speed, although not necessarily in the same direction as crankshaft rotation.

Since the chamber 24 of extension 19 is in full communication with the main crankcase chamber 31, as appears in Fig. 2, the opening 20 receiving the magneto shaft coupling 23 therethrough, is sealed about the magneto frame extension 32 at the opening in any suitable manner as by a gasket indicated at 34.

The device of the present invention is located in the crankcase extension 19, as appears in Figs. 2 and 3, and employs the magneto drive gear 26 as an element thereof. An aperture 35 is provided in the outer vertical wall 36 of crankcase extension 19, giving access to the extension chamber 24, and this opening is normally closed by a removable closure plate or cover member 38 which is suitably sealed at the opening by a gasket 39 or like means. Centrally of the closure plate and

UNITED STATES PATENT OFFICE

2,417,195

SNAP-RING SECURED, DIVIDED MOTOR CASING

William Hargreaves, Bergenfield, N. J., assignor to Bendix Aviation Corporation, Teterboro, N. J., a corporation of Delaware

Application June 30, 1943, Serial No. 492,925

7 Claims. (Cl. 171—252)

1

The present invention relates to assembly systems and more particularly to a novel knockdown assembly system and a novel method for its performance.

Conventional systems and methods used in assembling parts of apparatus, such as power units, signal units, electric motors, generators and the like within a housing or casing require numerous screws, bolts and other tool applied parts. Tools are also necessary in conventional systems to connect the component parts in bearing supports and other necessary supporting elements. Likewise, repair work requires disassembly of various parts with tools to fit special nuts and bolts requiring experienced disassemblers.

Such conventional apparatus assembly and disassembly methods and systems are arduous and time consuming and present a constant major problem to time study engineers. Time study engineers prior to the present invention, to meet production requirements, tried to solve the assembly problem in the usual way. They increased rapidity and efficiency of the various apparatus production to a limited extent by using groups of specially trained assemblers, assigning one group to assemble apparatus parts, another group to fasten bolts and screws and so on. Although the time study experts mathematically stepped up production and efficiency to a limited degree by increasing the quality and number of employed craftsmen, they also increased production costs.

Accordingly, a new solution amounting to more than a mere partial or intangible mathematical correction of the foregoing problem was in demand, as essential to obtain higher production efficiency. An object of the present invention, therefore, is to provide novel means whereby such higher production efficiency can be obtained. This highly desirable end is accomplished by providing novel apparatus adapted for rapid assembly and disassembly together with a novel method for its performance, permitting utilization of one unskilled worker, where two or more skilled craftsmen were required before, and to provide for a minimum assembly time even though the assembler is unskilled, thereby resulting in materially decreasing production costs.

Another object of the present invention is to provide novel apparatus adapted for rapid assembly and disassembly without the use of threaded parts, tools, etc.

A further object is to provide a novel assembly casing for electrical apparatus including a novel

2

hand applied coupling arrangement, whereby rapid and efficient assembly of such apparatus without tools by inexperienced labor is made practical.

A further object is to provide a quickly assembled novel casing, whereby a plurality of demountable apparatus parts may be disassembled by a single demountable coupling member for repair and/or replacement of parts.

Still a further object of the invention is to provide novel knockdown devices such as motors, signal units, and the like without tool applied parts.

And yet a further object is to provide a novel knockdown motor or the like assembly case having interlocking sections, so shaped and so proportioned, as to hold the motor parts in operative assembled position when the case sections are interlocked and coupled together.

Another object is to provide a novel housing for motors or the like comprising a collapsible housing provided with interleaving sections which are adapted for rapid interlocking by means of hand operated clamping means.

The above and other objects and advantages of the present invention will appear more fully hereinafter from a consideration of the detailed description which follows, taken together with the accompanying drawings wherein two embodiments of the invention are illustrated. It is to be expressly understood, however, that the drawings are for the purpose of illustration only and any devices described specifically are to explain the system and are not designed as a definition of the limits of the invention.

In the drawings, wherein like reference numerals represent like parts in the several views:

Figure 1 is a perspective view of a motor provided with the novel assembly of the present invention.

Figure 2 is a perspective view of the motor shown in Figure 1 with the outer casing sections uncoupled and slightly parted with the snap coupling ring detached.

Figure 3 is a side longitudinal view partly in cross section of the assembled motor; and

Figure 4 is a perspective view of another form of a novel casing which may be used in connection with a signal device, such as an electrical signal unit for use as an aircraft accessory device.

Referring to Figure 1 in detail, numeral 16 designates for example, an assembled electric device, such as a motor, generator or signal device which includes a sectional casing having two hol-

March 11, 1947. W. HARGREAVES 2,417,195

SNAP-RING SECURED, DIVIDED MOTOR CASING

Filed June 30, 1943 2 Sheets-Sheet 2

INVENTOR
William Hargreaves
BY
Hedvat & Buck
Attorney

March 11, 1947. W. HARGREAVES 2,417,195

SNAP-RING SECURED, DIVIDED MOTOR CASING

Filed June 30, 1943 2 Sheets-Sheet 1

INVENTOR.
William Hargreaves
BY
Robert M. Beach
Attorney

valve communicate with the crank case through the hollow rotary valve shaft (sleeve 21), in consequence of which the resultant added volume of gases to the crank case per revolution for supercharging amount to two times the area of the greatest diameter of the rotary valve multiplied by its axial movement.

From the foregoing description taken in connection with the accompanying drawing it is thought the construction, operation and advantages of the invention will be clear to those skilled in the art.

What I claim is:

1. In a two-cycle internal combustion engine having a cylinder, a crankcase, a piston and a crank shaft employing crankcase compression and wherein the fuel mixture is admitted to the crankcase and through a rotary valve, the improvement which comprises; an extension to the crankcase, said extension being in communication with the crankcase at one end of the extension, a rotary valve in said one end and serving as a closure therefor; means to move said rotary valve axially in said one end to increase and decrease the effective capacity of said crankcase; and means to pass fuel into the crankcase via said valve at suitable times.

2. In a two-cycle internal combustion engine having a cylinder, a crankcase, a piston and a crank shaft and employing crankcase compression and wherein the fuel mixture is admitted to the crankcase by and through a rotary valve, the improvement which comprises; a combined rotary and reciprocating valve; a housing for said valve in which the valve is rotatably and reciprocatingly mounted, said housing being in part functionally an extension of said crankcase; means to pass fuel into the crankcase via said valve when said valve is in one position; and means to rotate and reciprocate said valve by virtue of which the effective crankcase volume will alternately be increased and diminished for purposes described.

3. In a two-cycle internal combustion engine having a cylinder, a crankcase, a crank shaft, a piston operatively connected with said crank shaft, and means for delivering fuel to the crankcase the improvement which includes a body having a cylindrical passage divided into two chambers by a suitable partition that is in turn provided with a valve-sleeve bearing; a rotary valve in said body and comprising two end discs, one located in each chamber and connected by a sleeve open at its end adjacent the crankcase and closed at its other end against atmosphere, said sleeve adjacent said other end having ports communicating with the second of said chambers at places between said partition and the adjacent end disc; a fuel mixing and delivering duct in said partition communicating with said valve sleeve, said valve sleeve having a port to register with said fuel duct at times; and means to rotate and simultaneously reciprocate said valve.

4. In a two-cycle crankcase-compression engine having a cylinder, a crankcase, a piston, a crank shaft and a piston rod, said crankcase having a valve-controlled fuel inlet, the improvement which includes; a valve-compressor cylinder, said valve-compressor cylinder having a V-shaped partition with a valve-sleeve bearing and dividing said valve-compressor cylinder into two chambers, one of which chambers communicates directly with the interior of the crankcase and the other chamber is remote from the crankcase;

a combined valve and compressor-piston in said valve-compressor cylinder and including two end piston-discs connected by a sleeve one end of which communicates constantly with the crankcase and the other end of which communicates directly with the space between the piston disc that is in the remote chamber and said V-shaped partition; a fuel duct through said partition to said sleeve; said sleeve having a port for communication with said fuel duct at times; and means to rotate said combined valve and compressor-piston on its axis and reciprocate it along its axis to cause said port to register with said duct and to super-charge the crankcase with fuel at times.

5. The engine of claim 4 wherein the means to rotate said combined valve and compressor-piston on its axis and reciprocate it along its axis comprises shoes on said discs for engaging the respective faces of said V-shaped partition, and cams to rotate said valve.

6. In a two-cycle crankcase-compression internal combustion engine having a cylinder, a piston, a crankcase, a crank shaft and a connecting rod; the combination with the aforesaid structure of means for admitting fuel to and supercharging the crankcase with fuel, said means including a fuel duct; an auxiliary cylinder connected to the crankcase; a combined fuel admitting and fuel charging valve in said auxiliary cylinder, said valve having a fuel passageway and a port for registering with said fuel duct; and means to turn said valve on its axis and move the valve along its axis for purposes described.

7. The engine of claim 6 wherein the means to turn said valve on its axis and move the same along its axis comprises a crank pin on said combined valve and operatively connected through said crank shaft for turning said valve and cam means to reciprocate said valve along its axis as the valve is being turned.

8. In a two-cycle crankcase-compression internal combustion engine having a cylinder, a piston, a crankcase, a crank shaft and a connecting rod; the combination with the aforesaid structure of means for admitting fuel to and supercharging the crankcase with fuel, said means including a fuel duct; an auxiliary cylinder connected to the crankcase; a combined fuel admitting and fuel charging valve in said auxiliary cylinder, said valve having a fuel passageway and a port for registering with said fuel duct; and means to turn said valve on its axis and move the valve along its axis for purposes described, said last named means comprising a crank pin on said combined valve, operatively connected to said crank shaft for turning said valve and cam means to reciprocate said combined valve along its axis as it is being turned, said cam means comprising a V-shaped member having a valve bearing in which said combined valve rotates, said combined valve including end discs and shoe-carrying elements swivelly mounted on each disc and engaging said V-shaped member at diametrically opposite points.

9. In a two-cycle crankcase compression engine; means to control the admission of fuel into the crankcase and supercharge the same, said means including a combined rotary valve and fuel charger unit and means to operate the same to charge additional fuel into the crankcase on the compression stroke of the engine.

HENRY PORSTER.

UNITED STATES PATENT OFFICE

2,404,833

TWO-CYCLE INTERNAL-COMBUSTION ENGINE

Henry Forster, Broadview, Ill.

Application March 15, 1945, Serial No. 582,855

9 Claims. (Cl. 123—73)

1

My invention which relates to two-cycle engines primarily has for its object to provide improved means for supercharging the crank case with workable mixture.

Further it is an object to provide a simple, effective and inexpensive means which is especially adapted for use in model engines used on model airplanes, etc. Engines of the kind just referred to usually employ a rotary valve for controlling the fuel admission to the crank case and my invention involves the use of a combined rotary valve and compressor unit which not only controls the fuel admission but also assists the piston to compress a greater charge than that usually drawn into the crank case for compression by the piston.

Again it is an object to provide an improved means to increase the volume of the crank case while the piston is on its suction stroke and, after the crank case has been filled with working mixture by the suction of the piston, force the increased volume of fuel into the normal crankcase space to be compressed by the piston on its compression stroke.

Other objects will in part be obvious and in part be pointed out hereinafter.

To the attainment of the aforesaid objects and ends the invention also resides in those novel details of construction, combination and arrangement of parts all of which shall be first fully described hereinafter and then be specifically pointed out in the appended claims, reference being had to the accompanying drawing in which:

Fig. 1 is a central vertical longitudinal section of an engine embodying my invention.

Fig. 2 is a detail side elevation of the rotary valve with the piston disc omitted.

Fig. 3 is an end elevation of the same.

Fig. 4 is a detail cross section on the line 4—4 of Fig. 3.

In the drawing in which like numerals of reference indicate like parts in all the figures, represents the cylinder of an engine of the type hereinbefore mentioned. The piston 2 carries a wrist pin 3 to which one end of a connecting rod 4 is pivoted, the other end of the rod 4 being pivoted to the crank 10.

The crank case 5 is preferably cast integrally with the cylinder 1 and has one end wall provided with a bore 14 for a purpose presently explained. The crank case has a shaft bearing 6, suitably bushed as at 7 to receive the crank shaft 8. The shaft 8 has a crank disc 9 and the crank 10. The crank 10 is hollow and is bushed at 11 to receive the crank 32 of the rotary valve.

2

A piston-controlled by-pass 12 conveys the compressed mixture from the crank case into the cylinder 1 above the piston. The exhaust port and duct is shown at 13.

The valve-compressor housing 16 has a reduced end 15 which fits tightly into the bore 14 and the cylinder 16 is secured to the crank case by cap screws 18 passing through bores in the crank case and tapped into ears 17 on the cylinder 16. The housing 16 is divided into two parts by a V-shaped-in-cross-section partition 21 the inner face 19 of which is a plane surface inclined upwardly-inwardly while the outer face 20 inclines upwardly-outwardly, the angles of inclination of the faces 19 and 20 are the same.

22 indicates the fuel intake duct whose flared end 23 admits air. A gasoline nozzle 24 held in a boss 25 supplies the combustible and with the air constitutes the fuel which passes down the duct to the valve sleeve 27.

The valve sleeve 27 has a port 28 to register with the lower end of the intake duct 22 at times. It also has ports 29 communicating with the space between the partition 21 and the piston disc 35 that is secured to the threaded end 30 of the closed end of the valve sleeve, a jamb nut 36 being provided to prevent the piston disc 35 coming loose.

At the open end the sleeve 27 is provided with a disc 31 that moves as a piston in the uppermost bore of the cylinder 16 while the disc 35 acts as a piston in the outermost bore of the cylinder 16.

A ball 33 is mounted on the disc 31 and carries a shoe 34 that lies against the face 19 of the partition while a ball 37 is mounted on the disc 35 at the side diametrically opposite that where the ball 33 is located, and carries a shoe 38 that lies in contact with the face 20 of the partition 21.

As the crank shaft 8 rotates during its normal operation, it rotates and drives, by means of the crankpin 32, the rotary valve. The rotary valve, due to the two ball joints 33 and 37 and shoes 34 and 38, acting on the stationary cam (the V-shaped partition 21) is forced to move axially in a reciprocating manner. At a predetermined position of the crankshaft, port 28 in the rotary valve, communicates with the carburetter intake (tube 22) for admission of the fuel mixture. With the crankshaft rotation continuing, the rotary intake port 28 closes, whereupon the rotary valve, moving in an axial direction toward the crankshaft, decreases the volume of the crankshaft space 39.

The four ports or passages 29 in the rotary

July 30, 1946. H. FORSTER 2,404,833

TWO-CYCLE INTERNAL-COMBUSTION ENGINE

Filed March 15, 1943

FIG. 1.

FIG. 4.

FIG. 3.

FIG. 5.

Henry Forster.

Oliver & Dietrich.

slanted with a retarded spark, as is desired for cranking, by means of the governor weight 4, which then occupies the full line position shown in Fig. 1. As the engine speeds up, centrifugal force moves weight 4 to the dotted line position shown in Fig. 1 and advances the spark by shifting cam 24 in the direction of rotation (clockwise as viewed in Figs. 2 and 4).

For the purpose of simplicity of disclosure only one governor weight has been shown. As a practical matter, a second governor weight, operating with the first weight so as to always balance the latter, might be used or the one governor weight might be otherwise counterbalanced. This counterbalancing is old and well understood in the art so that illustration of it here is thought unnecessary.

The automatic spark control mechanism of this invention is characterized by its extreme simplicity. There are very few parts and each part is simple and capable of being easily and cheaply produced. The assembly of these few parts is also simple and capable of being performed quickly and easily. Before the flywheel is placed on the crankshaft, the shaft 2 is pushed into its hole in the hub of the flywheel, working from the inside of the flywheel. Then the weight 4 is pinned to the protruding end of the shaft 2 and this holds the shaft axially in position. The limit pins 8 and 9 are driven into the flywheel and spring 7 is applied to hold the weight in retarded position. The cam 24 is then turned on the crankshaft into retard position, after which the flywheel is thrust axially on the shaft with the crankpin of crank 3 entering groove 6. The flywheel is then put in place on the crankshaft 25 and fastened as indicated to complete the assembly.

This spark control mechanism occupies so little space inside the flywheel as to be negligible for all practical purposes. Only the crank 3 extends into the space inside the flywheel and, even then, the crankpin 5 located in the slot 6 in the cam and therefore does not occupy any additional space. The crank arm is of very small volume and occupies very little space, merely a small corner near the inner end face of the flywheel hub. And only a small space is needed to enable this crankarm to swing throughout the desired range. Then also the small space needed would otherwise be unoccupied. The automatic spark advance can thus be applied to a standard flywheel magneto without requiring any change other than the slotting of the breaker cam and the omission of the key or pin which formerly held this cam to the crankshaft.

I claim:

1. The combination in a flywheel magneto with the flywheel and its crankshaft, of a breaker cam mounted to turn on said shaft, a small shaft rotatably mounted in the flywheel in parallel and closely adjacent relation with said crankshaft, said second-named shaft having its inner end extending into the space within the flywheel and engaged with said cam to turn the latter on the crankshaft when the second-named shaft is turned and having its outer end extending outside the flywheel, a governor weight mounted outside the flywheel and connected to turn said second-named shaft back and forth when the weight swings outwardly and inwardly by centrifugal force, and yieldable means acting on said weight in opposition to centrifugal force.

2. The combination in a flywheel magneto with the flywheel and its crankshaft, of a breaker cam mounted to turn on said shaft, a small shaft rotatably mounted in the flywheel in parallel and closely adjacent relation with said crankshaft, said second-named shaft having its inner end extending into the space within the flywheel and having a crank, said cam having a slot in its periphery in which the crankpin of said crank is engaged, whereby to turn the cam on the crankshaft when the second-named shaft is turned, said second-named shaft having its other end extending outside the flywheel, a governor weight mounted outside the flywheel and connected to turn said second-named shaft back and forth when the weight swings outwardly and inwardly by centrifugal force, and yieldable means acting on said weight in opposition to centrifugal force.

3. The combination in a flywheel magneto with the flywheel and its crankshaft, of a breaker cam mounted to turn on said shaft, a small shaft rotatably mounted in the flywheel in parallel and closely adjacent relation with said crankshaft, said second-named shaft having its inner end extending into the space within the flywheel and having a crank, said cam having a slot in its periphery in which the crankpin of said crank is engaged, whereby to turn the cam on the crankshaft when the second-named shaft is turned, said second-named shaft having its other end extending outside the flywheel, a governor weight fixed to said last-named end of the second-named shaft, stops for limiting the swinging movement of said weight, and spring means for holding said weight in its innermost radial position and against one of said stops.

RUSSELL E. PHELON

July 22, 1947. M. PIRY 2,424,416

ENGINE COOLING SYSTEM

Filed Jan. 6, 1944 3 Sheets-Sheet 3

Fig. 3.

Fig. 4.

INVENTOR:
MARCEL PIRY

BY

Miguet, Henry & Campbell
ATTORNEYS

July 22, 1947. M. PIRY 2,424,416

ENGINE COOLING SYSTEM

Filed Jan. 6, 1944 3 Sheets-Sheet 2

Fig. 3.

INVENTOR:
MARCEL PIRY
BY
ATTORNEYS

July 22, 1947. M. PIRY 2,424,416

ENGINE COOLING SYSTEM

Filed Jan. 6, 1944 3 Sheets-Sheet 1

Fig. 1.

Fig. 2.

INVENTOR:
MARCEL PIRY
BY
ATTORNEYS

5

lar groove therein spaced equally from the rim of each bell lug, said coupling spring normally holding the ends of each groove of each bell lug out of alignment, until said bells are pushed together, and a coupling ring adapted to snap within the annular groove formed by such alignment, so as to press against the walls of said grooves in the direction of each bell lug rim in response to the expansion of said coupling spring.

3. A knockdown device comprising interengaging assembly sections, support means in each assembly section, a coupling spring, a seat for said spring associated with one of said assembly sections, means adapted to be seated in said support means of the other assembly section extending therefrom adapted to extend into said first assembly section adjacent said coupling spring seated therein, whereby to pilot said inter-engagement of said sections and compress said spring when said sections are inter-engaged, and coupling means adapted to hold said sections coupled together against the expansion of said coupling spring when compressed between said seat and said means seated in said support means of each inter-engaged section.

4. A knockdown apparatus assembly comprising a casing having a pair of interlocking sections, a rotor shaft, a bearing socket in each section, resilient means in one of said bearing sockets to prevent end thrust of said rotor shaft, an annular flanged portion in each section adapted to form a stator supporting chamber when said sections are together, a second resilient means normally adapted to resist interlocking of said sections, a plurality of staggered transversely grooved interlocking members associated with each interlocking section adapted when pushed together to form a complete annular groove, and a snap ring adapted to interfit within said annular groove in the interlocking members, whereby said grooves of each staggered interlocking member are maintained in substantial alignment against the longitudinal thrust of said second resilient means to thereby secure the above apparatus parts in operative assembled position.

5. An assembly casing for knockdown motor parts or the like comprising a pair of bell members, one of said bell members having an apertured outer flanged head portion and a rim with a plurality of perpherally grooved lugs, the other of said bell members having a rim with a plurality of perpherally grooved lugs adapted to interlock with said grooved lugs of said bell with the flanged head in thereby define an annular

6

groove around the circumference of said interlocked bells, circumferential coupling means adapted to fit in said annular groove to couple said lugs together against accidental separation, and a plurality of cooperatively opposed sockets and flanges within each bell member adapted to hold said knockdown motor parts or the like together in assembled position, when the said bell members are coupled together.

6. An apparatus casing comprising, part supporting members having end walls and interfitting portions, resilient means tending to separate said members and parts, and separable means circumscribing said members at the interfitting portions and inter-engaging therewith to couple said members together against the action of said resilient means and adapted to hold the latter compressed and to be held under tension thereby.

7. An apparatus casing comprising, part supporting members having end walls and interfitting grooved portions, which when interlocked form a continuous peripheral groove, resilient means tending to separate said members and parts, and a resilient snap ring circumscribing said members at the interfitting portions and inter-engaging the peripheral groove formed to couple said members together against the action of said resilient means adapted to hold the latter compressed and to be held under tension thereby.

WILLIAM HARGREAVES.

REFERENCES CITED

The following references are of record in the file of this patent:

UNITED STATES PATENTS

Number	Name	Date
521,083	Weitstein	June 5, 1894
1,721,419	Staak	July 16, 1929
1,926,464	Gilbert	Sept. 12, 1933
818,703	Hewley	Apr. 3, 1906
2,040,371	Gough	May 12, 1936
1,794,236	Smith et al.	Nov. 5, 1929
2,007,398	Kobly	July 9, 1935
1,457,155	Fey	May 29, 1923
889,786	Keiner	June 2, 1908
212,964	Spencer	Feb. 4, 1879
1,984,570	Simmons	Dec. 18, 1934
165,809	Wyvell	July 20, 1875
1,774,108	Tucker	July 30, 1918

FOREIGN PATENTS

Number	Country	Date
6,481/32	Australian	Mar. 7, 1933

low bell sections **16** and **17** coupled together by a snap or split spring coupler ring **15**.

Each bell section is identically constructed both exteriorly and interiorly, the only distinction residing in the position of the resilient elements, hereinafter described, housed in bell section **17**. Bells **16** and **17**, see Figures 2 and 3, the latter being a twin of bell **16**, may be any suitable shape, such as a cylinder having a centrally apertured top portion **18** with a raised annular end plate **19** defining the bottom of a bearing socket **20** formed within bells **16** and **17**, and an open bottom rim having a plurality of alternately spaced recesses or notches and protrusions, lugs or segments **21** and **22**.

Lugs or segments **22** are so shaped and so proportioned as to form an interlocking joint connection with lugs **21** of bell section **16**. The lugs **21** and **22** are arcuately grooved or provided with circumferential seats, as at **23** and **24**, better shown in Figure 2, so that when the two bell sections **16** and **17** are pressed tightly together the arcuate grooves **24** of bell **16**, and **23** of bell **17**, form one complete circle. Grooves **23** and **24** provide seats and lateral circumferential walls or surfaces **25** and **26**, **27** and **28**, that extend transverse the longitudinal ends of each lug.

Surfaces **25** formed by grooves **24**, and surfaces **26** formed by grooves **23**, are coupling surfaces designed to press against alternate opposite sides of snap or split spring coupler ring **15** when expanded, slipped over the sections and snapped or allowed to contract into the grooves. Such coupling action is generated by compression of normally expanded coupling, loading or biasing spring **29**, seated inside bell **17** on an annular flange **30**, see Figure 3, in cooperation with stator **31** seated inside bell **16** on an opposed annular flange **32**.

Seated in bearing socket **20** of bell **17** is a resilient member, as loading or biasing spring **33** in contact with a bearing **34**, which may be of the ball bearing type illustrated. Spring **33** tends to separate or force bearing **34** apart from the top portion **18** and end plate **19** of section **17** and prevents any longitudinal play or thrust of rotor shaft **35** journalled in bearing **34**, after the device is assembled.

Rotor shaft **35** is also journalled in a bearing **36** seated in socket **37** of bell **16**, rotor **38** being attached to shaft **35** intermediate the bearings **34** and **36**.

Positioned around rotor **38** is the stator **31**, which fits between bell sections **16** and **17** within annular counterbunk chamber **39** defined by annular flange **30** of bell **17** and annular flange **32** of bell **16**.

Assembly operation

Assuming for the sake of example, an electrical device, such as a motor is knocked down or is in disassembled form, the first step for complete assembly of the motor is to position the motor parts in bell member **17** as follows: insert spring **33** in bearing socket **20**, place the coupling spring **29** on flange **30**, insert stator **31** against spring **29**, secure bearings **34** and **36** to rotor shaft **35** on outer side of rotor **38** and then insert the bearing **34** within socket **20** against spring **33**.

After bell section **17** has been filled with the loosely positioned motor parts, bell section **16** is inserted over rotor shaft **35** and power cables **39** are threaded through a bushing **40** formed on bell **16**. Bell section **16** is then pushed together with bell section **17**, over the motor parts, so that bearing **36** seats in bearing socket **37** and lugs **21** and **22** of bell **16** interlock or interleave with lugs **22** of bell **17** in a dovetail or like joint.

Pressure is now applied to each bell section to overcome the resistance of coupling spring **29**, so as to compress spring **29** between flange **30** and stator **31** and so as to align grooves **23** and **24** end to end to form a complete circle or circumscribing groove or seat, and then snap ring **15** is inserted in the grooves and pressure is released. Upon release of manually applied pressure, the spring **29** expands and moves surfaces **25** and **26** of grooves **24** and surfaces **27** of grooves **23** in opposite directions, against the alternate opposite sides or side portions of coupling ring **15** and grip, the same to the extent of a slight distortion thereof tending to disalignment due to the engagement of alternate portions at opposite sides, to prevent accidental displacement of ring **15** from the grooves, see Figure 3.

In Figure **4** is illustrated a modified form of the novel casing which is adapted for use in connection with signalling units, and other accessory devices. An apertured flange **45** is formed with or secured to one of the end bells and is adapted to be secured to a panel, not shown, and cable openings **46** and **47** are elongated, so as to provide for projection of power cables from either the side or the top of the respective hub sections **48** or **49**. Otherwise, the device of Figure **4** is identical to that illustrated in Figures 1, 2, and 3, previously described in detail.

There is thus provided a novel apparatus assembly system and method eliminating all use of nuts, bolts, screws, and other threaded parts requiring the use of tools or any of the usual time impeding devices and which is simple, so that even unskilled labor may efficiently assemble or disassemble the apparatus in minimum time.

While only two embodiments of the invention have been illustrated and described, other changes and modifications which will now appear to those skilled in the art, may be made without departing from the scope of the invention. Reference is, therefore, to be had to the appended claims for a definition of the limits of the present invention.

What is claimed is:

1. A casing for power responsive devices comprising cooperating members, each of said members having a plurality of alternately spaced segments whereby the segments of one member inter-engage with the segments of the other member, arcuate surfaces carried by each of said segments whereby opposed continuous annular surfaces are defined when said segments are firmly inter-engaged, resilient means interposed between said sections adapted to resist said firm engagement of said segments, and an annular coupling member adapted to seat between said continuous annular surfaces defined by said arcuate surfaces, whereby the members are adapted to be coupled together firmly against resistance of said resilient means and said annular coupling member is held against accidental displacement by opposed pressures from said arcuate surfaces on each side thereof at opposed alternate points.

2. An apparatus casing comprising two bell members, a plurality of lugs around the peripheral rim of each bell, an annular flange at the base of said lugs within one of said bells, a coupling spring seated on said flange, a stator and rotor assembly mounted within said bells, said stator being adapted to seat against said coupling spring, each of said lugs having an annu-

Patented July 22, 1947 2,424,416

UNITED STATES PATENT OFFICE

2,424,416

ENGINE COOLING SYSTEM

Marcel Piry, Farmingdale, N. Y., assignor to Fairchild Engine and Airplane Corporation, Farmingdale, N. Y., a corporation of Maryland

Application January 6, 1944, Serial No. 517,188

7 Claims. (Cl. 123—171)

1

This invention relates to engine cooling systems and has particular reference to a system for cooling the cylinders of aeronautical engines, although the invention is not limited to that use.

It has been aeronautical engine cooling practice to obtain cooling air from the air stream induced by the propeller or by the movement of the airplane through the air, by collecting it in a substantially closed air scoop, either separately provided or arranged as part of the engine cowling, and having an air intake opening in the air stream. Owing to its velocity the air trapped in the scoop builds up a substantial static pressure, since the aggregate area of the restricted air exit openings between and around the cylinders is made less than the area of the intake opening of the scoop, or the outflow of air from the scoop is otherwise restricted or retarded as by friction or the like. The pressure air accordingly flows out of the scoop at high velocity over the cooling surfaces of the cylinders, which cylinders are provided with fins, spines or other projections to increase their cooling areas, and the cylinders are accordingly relatively uniformly cooled.

In air-cooled engines employing uni-directional cooling air flow, characterized by the fact that the same cooling air is used for cooling the front or upstream and the rear or downstream sides of the cylinder, the temperature of the cooling air is raised as the air progresses through the baffles, and unless provision is made to increase the rate of heat transfer per unit of temperature differential between the fins and the cooling air, the rear or downstream side of the cylinder must be expected to operate at a higher temperature than the front or upstream side, if a uniform heat abstraction is required all around the cylinder, as is usual. Furthermore, experiments have shown that the two portions of the cylinder barrel on which the two piston side thrusts, usually termed "thrust" and "anti-thrust," are applied, receive more heat than the rest of the cylinder barrel because of the heat generated by the friction between the piston and the wall and the heat transmitted by conduction from the piston to the cylinder wall through the piston skirt and, therefore, more heat must be removed by the cooling air over these two regions than over the rest of the cylinder barrel.

Because of the above considerations, it can be seen that the location of the piston thrusts on the cylinder barrel with respect to the direction of the cooling air flow has an important bearing on the cooling characteristics and the baffle design of an air-cooled engine. Nevertheless, all

2

engines require an acceptable temperature distribution around the cylinder to avoid excessive distortion and wear. This condition must be met with the cooling air becoming progressively hotter as it proceeds through the baffles and with a heat rejection requirement which is decidedly non-uniform around the cylinder.

Accordingly, when the thrust and anti-thrust sides of the cylinder coincide with the front or upstream and rear or downstream sides of the cylinder, as in the case of an inline engine characterized from the cooling standpoint in that the cooling air flows across the cylinder bank in a general direction virtually perpendicular to the axis of the crankshaft, then the cooling requirements of the front or upstream and rear or downstream sides of the cylinder are greatly increased. Inasmuch as the cooler air engages the upstream or front side of the cylinder, the cooling of that side is not as acute a problem as that presented by the downstream or rear side of the cylinder, since that side receives warmer air previously used for cooling the upstream cylinder surfaces.

It has been found that the streamline or laminar air flow resulting from the usual prior cooling arrangements is not sufficient in many cases to provide adequate heat abstraction at the points requiring greater cooling, such as the aforementioned piston thrust and anti-thrust points, particularly when these points coincide with the upstream and downstream portions of the cylinder, as in the case of the inline engine described. However, a turbulent air flow may produce adequate cooling if properly controlled, notwithstanding the fact that turbulence causes a loss in air cooling pressure, a condition that has long been considered undesirable and inefficient. An example of an engine cooling system embodying turbulence-creating means that has proven very effective in improving the cooling efficiency of internal combustion engine cylinders, particularly the upstream sides thereof, is disclosed in copending application Serial No. 540,043, filed June 13, 1944, by D. B. Cox.

The present invention constitutes an improvement on that system, and also provides auxiliary or alternative arrangements producing the same or similar effects and consequent advantages by providing local turbulence over certain portions of the cylinder where a higher heat transfer per unit of temperature differential between the fins and the cooling air is required, either because the cooling air has been already warmed before reaching these portions or because more heat is to be rejected over said portions, or both, such as the downstream or rear sides of the cylinders

in inline engines, although the invention may be used with equal facility on radial engines, as will be described.

In accordance with the invention, such local turbulence is provided by wing baffles having sharp free edges projecting into the air stream flowing adjacent the finned cylinder of an internal combustion engine, so as to create turbulence in the air stream at points receiving more heat for mechanical reasons and thus requiring greater heat abstraction, or at points where the cooling air already preheated calls for a higher heat transfer coefficient. As stated, the local turbulence thus created results in a higher heat abstraction and an explanation of this enhanced cooling effect is that turbulence precludes the maintenance of a layer of hot air on the cylinder cooling surfaces that acts as a heat insulator. The violently turbulent air scours this layer of spent cooling air from the cylinder surfaces and fins, and rapidly and continuously takes its place, with the result that fresh cooling air is always present to remove the heat as rejected by the cylinder at the selected point.

In inline engines the local turbulence provided by these wing baffles will be required primarily at the downstream or rear sides of the cylinders for the reasons mentioned, and these wing baffles may be employed to advantage in conjunction with the turbulence-creating baffle arrangement disclosed in said copending application, which is particularly adapted to cooling the upstream or front sides of the cylinders. In this way the entire cylinder is not only more efficiently cooled by the turbulent air, but selected parts thereof requiring greater cooling or requiring equal cooling with the hotter air, are also locally treated with air whose turbulence is greatly augmented at the selected points.

In a radial engine, characterized from a cooling standpoint by the fact that the cooling air flowing across a cylinder bank has a general direction virtually parallel to the axis of rotation of the crankshaft, the piston thrusts are applied on the lateral sides of the cylinders in the plane of the cylinder row and then only the first of the aforesaid conditions exists, the maximum heat rejection being required on the lateral sides where the cooling air has not yet been considerably preheated. The cooling of the rear or downstream side of the cylinder will not be as critical as in an inline engine because one of the piston thrust points does not occur there, and local turbulence will be helpful primarily at the lateral sides to increase the total heat rejection as required because of the piston thrusts, and secondarily over the rear or downstream half of the cylinder to assure adequate cooling with the warmed air that is available. Thus, the large scale turbulence created by the propeller and generally accepted as sufficient for adequate cooling of the front of the cylinders of a radial engine, may be materially aided by local turbulence created at those points beyond the front sides of the cylinders in accordance with the invention. When the invention is adapted to a radial engine, each cylinder is preferably individually jacketed with the jacket providing smooth intake and exit openings and with the aforementioned wing baffles extending into the air stream for producing turbulence in the air stream at the selected points around the cylinder, preferably at the lateral or piston thrust and anti-thrust sides thereof, and if required, at the rear or downstream side thereof. The jacket plates are spaced from the cylinder fin tips so that the air flows turbulently not only between the fins but also around them to produce the enhanced cooling effect previously described.

It will be seen that, in accordance with experiments performed on engines, the engine cooling system of this invention provides improved temperature distribution around the cylinder, as well as greater evacuation of heat from the cylinder when a drop in pressure of the cooling air is available, this drop in pressure depending upon the design of the cowling and airplane speed. By providing the local air turbulence that is necessary to not only continuously supply pressure cooling air to selected cylinder surfaces, but also to remove the spent cooling air that tends to cling to the surfaces, greater engine efficiency is possible under all operating conditions.

For a more complete understanding of the invention, reference may be had to the accompanying drawings, in which:

Figure 1 illustrates semi-diagrammatically a horizontal section through a single bank inverted inline aeronautical engine equipped with the cooling system of this invention;

Fig. 2 is an enlarged section through a single cylinder of Fig. 1 equipped with the baffling arrangement of this invention, illustrating diagrammatically the typical turbulent flow of the air around and through the cylinder fins;

Fig. 3 is a transverse section through a cylinder of a radial engine equipped with the baffling arrangement of this invention;

Fig. 4 illustrates the manner of applying the invention to a radial engine; and

Fig. 5 is an end view of an inverted V-type of aeronautical engine showing the baffling arrangement of this invention applied thereto.

Referring to Fig. 1 of the drawing, numeral 10 designates a bank of six cylinders 11 in inverted inline arrangement, each equipped with the usual cooling fins 12, which term includes spines, or other equivalent cooling projections increasing the cooling surfaces of the cylinders. Enclosing one side of the cylinder bank 10 is an air scoop 13 of sheet metal, plastic, or the like, having the air intake opening 14 directed in the direction of travel of the airplane and preferably located in the slip-stream of the propeller, so that the air flows into the chamber 15 at a pressure higher than atmospheric pressure, or the pressure air may be otherwise supplied to chamber 15. The scoop 15 is accordingly located at the upstream side of the cylinder bank 10, which may also be considered the front of the bank from the cooling standpoint, since the air flows substantially transversely of the bank, i. e., from front to rear. It will be understood that the scoop chamber 15 is closed at the rear by fire wall 16 and extends inwardly to the crank-case at the top and to the camshaft housing at the bottom, so as to completely enclose one side of the cylinder bank 10.

A baffle plate 17, either one-piece or assembled, extends along the downstream side of the cylinder bank 10, being suitably secured to the crank-case and camshaft housing at its upper and lower edges, respectively. This baffle plate 17 is provided with slots 18, located opposite the axes of the corresponding cylinders 11 or otherwise, and fitted with outwardly turned flanges 19 providing a generally Venturi-shaped contour for exit slots 18, as shown. The exit slots 18 pref-

erably extend the full height of the cylinders, including head and barrel, or less, as required. The aggregate area of all of the exit slots 18 or of the passage area available at the location of the wing blades to be described is made less than the area of the air intake opening 14 of the scoop 13, so that a substantial static air pressure is built up within the chamber 15 by the kinetic energy of the inflowing air. However, the same effect may be obtained by making the said aggregate area smaller than the passage area of the scoop chamber 15 regardless of the area of the intake opening 14, the shape of which can be made to provide a Venturi tube effect so that the intake velocity is recuperated in the form of static pressure.

In the inline engine illustrated in Fig. 1, the piston thrust points coincide with the aforementioned front or upstream and the rear or downstream sides of the cylinders as indicated in Fig. 1, and since the rear side does not have unwarmed air available for cooling purposes, special cooling is required at the rear or downstream side of the cylinders in many cases. Accordingly, there are positioned adjacent the downstream or rear sides of the cylinders a plurality of wing blades or baffles 20 having sharp free edges projecting laterally into the air streams traversing the intercylinder spaces toward exit slots 18. As shown in Fig. 1, these wing baffles 20 are preferably positioned near the exit slots 18, and may be arranged at right angles to the lee baffle plate 17, as shown, although they may be otherwise positioned and in any required number, in order to intercept the air streams at points where greater cooling or greater heat transfer coefficient is required in order to attain the desired temperature distribution around the cylinders.

In operation of the engine cooling system of Figs. 1 and 2, and with particular reference to enlarged Fig. 2, it will be understood that the air within chamber 15 is under substantial static pressure and accordingly flows through exit slot 18 at considerable velocity.

After flowing between and over the fins on the front or upstream sides of the cylinders in bank 10, the air then flows between the cylinders with little turbulence, but inasmuch as the air tends to continue to flow in a straight line, it impinges against the flat surface of the lee baffle plate 17 and turbulence is created in the region approximately at 21, which might be termed a mixing space, since the air circulates vigorously and achieves a substantially uniform temperature.

As the air flows toward the exit opening 18, owing to the lower pressure at that point, it is intercepted by the wing baffles 20, which project into its shortest path from area 21 to the exit opening 18. As the air flows over the sharp intercepting edge of the wing baffles 20, its turbulence is increased in the manner shown by the arrows, between and around the fins 12, so as to scour off the layer of hot air tending to cling thereto, principally near the root of the fins. The inner ends of the flanges 19 are preferably reversely turned inwardly at 22, as shown, to further create turbulence prior to the streamline exit flow of the air through the Venturi exit slot 18.

It will be observed that the wing baffles extend inwardly to the tips of the fins 12, so that the air is caused to flow between them, and as the turbulence is created at the sharp edges of

baffles 20, it all takes place between the fins 12, this insuring that the scouring action is attained immediately at the cooling surfaces. If desired, the edges of the wing baffles 20 may be spaced slightly from the fins 12, so that some turbulent air flows over the tips of the fins. By means of these wing baffles 20, local areas of the cylinder are particularly well cooled and they may be placed at any point where such special cooling is required, and any number may be used at various points at the head or barrel of the cylinder. Also, the baffles 20 may extend the full height of the cylinders, or less, as required. For example, they may be located on the barrel only, or on the head only, or on parts thereof.

Referring now to Fig. 1, the spent cooling air issuing from the exit openings 18 into the low pressure chamber 23 formed by the cowling 24 is withdrawn through the exit gill 25 over which the slip-stream flows and thus creates a suction to promote the withdrawal of spent cooling air from chamber 23.

As previously stated, the wing baffle arrangement just described may be employed to advantage in conjunction with the turbulence-creating means of said copending application, in order to augment the turbulence created thereby and to provide turbulence at selected portions of the cylinders to which the turbulence created by said means may not reach or extend. To this end, the engine shown in Fig. 1 may be fitted with the turbulence-creating front baffle plate 26 such as is shown in said copending application. This front baffle plate 26 extends along and over the upstream side of cylinder bank 10, between the crank-case and camshaft housing, and is provided with vertical openings or slots 27 opposite the axes of the corresponding cylinders and extending the full height of the cylinders. The portions of the plate 26 forming the slots or openings 27 are sharp-edged, so as to create turbulence in the air flowing through them from chamber 15 into the space 28 formed behind the baffle plate 26, as aforementioned, and described in greater detail in said copending application. The aggregate area of slots or openings 27 is preferably greater than that of exit slots 18 although not necessarily so.

In operating the system of the present invention in connection with the front turbulence-creating plate 26, the air passing through slots or openings 27 from high pressure chamber 15 into space 28 is rendered turbulent by the sharp edges of openings 27 and scours the cylinders and fin surfaces. After passing around the widest part of the cylinders, the air strikes the lee baffle plate 17 and turbulence is recreated in the region 21 with wing baffles 20 increasing the turbulence before the air passes out of exit slots 18, in the manner previously described. The width of the front openings 27 may be adjusted with respect to the wing baffles 20 to secure turbulence of any desired degree at various selected parts of the engine cylinder, and it will be understood that wing baffles 20 may be placed at or near the openings 27 and in some cases may replace the front baffle plate 26 altogether. In short, the wing baffles 20 are extremely simple in construction and may be readily mounted at any point on the engine to obtain desired turbulence at any one or more points.

An example of use of the wing baffles near the upstream side of the cylinder in lieu of a front baffle plate like 26 in Fig. 1 is illustrated in Fig. 3, as applied to a radial engine, for example.

F.g. 3, in conjunction with Fig. 4, shows a double row radial engine, each cylinder 29 of which has the usual fins 30, but is jacketed by two half-baffles 31, which jointly substantially envelop the cylinder heads and barrels, being secured at their inner ends to the crank-case 32 and at their outer ends to the streamlined cowl 33. The space between jacketing baffles 31 of adjacent cylinders is closed by plates 34, which are sealed airtightly against cowling 33, as are the heads 35 of the jackets, as by gasket 36, so that the interior 37 of the cowling 33 forms an air scoop similar to the air scoop 13 of Fig. 1. The air stream entering the cowling opening 38 accordingly is blocked off by the jackets 31, plates 34, and gasket 36, so that it is constrained to flow into the jacket formed around each cylinder by the jacketing baffles 31, the air entering the opening 39, as shown in Fig. 3. The exit slots 40 formed between the two jacketing baffles 31 of all cylinders, or the passage available at the location of the wind blades aggregate an area less than that of the intake opening 38 of the cowling 33, so that a substantial static pressure builds up within chamber 37.

As shown especially in Fig. 3, the front edges 42 of the baffles 31 defining the intake opening 39 are curved outwardly and their rear edges are provided with outwardly-flaring flanges 43 imparting a Venturi shape to exit slot 40. The baffles 31 only closely engage the tips of the fins 30 of the cylinder 29 at the tangent point at the rear or downstream side, and are spaced therefrom elsewhere as shown at 44 in Fig. 3. Because the piston thrust points are located at the opposite lateral sides of the cylinders of a radial engine, in the plane of the cylinder row and transversely to the general direction of air flow from front to rear, as indicated in Fig. 3, the lateral sides of the cylinder require special cooling. To that end local turbulence in the air stream is created at these piston-thrust points in accordance with the invention. Accordingly, wing blades 47 and 48 are provided extending radially inwardly from the inner surfaces of the baffle plates 31 toward the fins at the lateral sides of the cylinder, as shown in Fig. 3.

In operation of the system of Figs. 3 and 4, the air enters opening 39 from chamber 37 at a greater pressure than that at which the air leaves the exit slot 40, and the air flows between the fins 30 and between their tips and the jacketing baffles 31 through the spaces 44 as shown by the arrows. The air then impinges upon the wing baffles 47, which extend to the tips of the cylinder fins 30, and hence the air flow is partly intercepted, so that considerable turbulence is imparted thereto as shown by the arrows in Fig. 3. The turbulence accordingly serves to scour off the spent hot cooling air which tends to cling to the cylinder and fin surfaces, especially near the root of the fins.

In its course further turbulence is imparted to the air by the following wing baffles 48 so that continued circulation and scouring results, after which the warm cooling air flows around and between the cylinder fins and out through the streamlined exit opening 40 into the spent cooling air chamber 49 for flow through the exit gills 50 shown in Fig. 4. High heat abstraction is thus obtained on the rear or downstream side of the cylinders of a radial engine where it is required because of the piston thrust in those sides and a high heat transfer coefficient is attained over the rear which makes it possible to assure cooling with already warm cooling air. The width and length of the openings 39 and 40, the distance between the tips of the fins and the baffles and the location of the wind blades, may be adjusted for suitable temperature distribution around the cylinders.

By adjusting the areas of the openings as described, and repositioning or increasing the number of wing baffles to create local turbulence, the system of this invention may be accommodated to the cooling requirements of any radial engine as well as of the inline engine of Fig. 1, and other types of engines to which the invention is applicable.

For example, the wing baffle arrangement of Fig. 1 may be applied with equal facility to an inverted inline V-type engine, as shown in Fig. 5, where two lee baffle plates 17' of the form shown in Fig. 1 and similarly fitted with flanges 19' defining exit slots 18', extend along the outer sides of the two banks of cylinders. These baffle plates 17' are fitted with the wing baffles or blades 20' adjacent the exit slots 18' and create turbulence in the air streams passing over them, in the manner described in connection with Fig. 1. If front turbulence-creating baffle plates 26' corresponding to front baffle plate 26 in Fig. 1 are desired, they are arranged to extend along the inner or upstream sides of the two cylinder banks, as shown. The cooling air scoop is formed by that portion 13' of the cowling extending between the camshaft housings 51 and having an opening directed in the direction of travel of the engine so as to collect cooling air which builds up a substantial static pressure within scoop chamber 15' by reason of its velocity and the enclosure thereof, including lee baffles 17' whose exit openings 18' or cooling air passage areas at the wing blades have an aggregate area less than that of the air intake opening. The remaining structure shown in Fig. 1 is employed in the V-engine shown in Fig. 5.

Although the invention has been illustrated and described in connection with certain inline, V, and radial engines, it is equally applicable to other types of internal combustion engines, and is otherwise susceptible of changes in form and detail within the scope of the appended claims.

I claim:

1. In an internal combustion engine having spaced cylinders located in an air stream, the combination of an air scoop for substantially enclosing one side of said cylinders and having an opening for directing a portion of the air stream into said scoop, a first baffle plate extending along and adjacent said one side of said cylinders providing openings opposite the cylinders, those portions of said baffle plate having relatively sharp edges projecting into the air streams flowing from said scoop through said openings for creating turbulence in the air flowing over said cylinders, a second baffle plate extending along and adjacent the opposite side of said cylinders and providing restricted openings for guiding said streams over the cylinders at relatively high velocity, and additional baffles on said second baffle plate projecting into said streams adjacent said passages for further creating turbulence in said streams flowing over said cylinders.

2. In an aeronautical engine having spaced cylinders located in an air stream, an air scoop for substantially enclosing one side of said cylinders and having an opening for directing a portion of the air stream into said scoop, a first baffle plate extending along and adjacent said one side

of said cylinders providing openings opposite the cylinders, those portions of said baffle plate having relatively sharp edges projecting into the air stream flowing from said scoop through said openings for creating turbulence in the air flowing over said cylinders, a second baffle plate extending along and adjacent the opposite side of said cylinders and providing restricted openings of less total area than the area of said scoop opening and the total area of said first baffle plate openings, whereby the air entering said scoop builds up a substantial pressure in the chamber between said scoop and the second baffle plate for causing said streams to flow over the cylinders at relatively high velocity, auxiliary baffles on said second baffle plate projecting into said streams adjacent said passages for further creating turbulence in said streams flowing over said cylinders, and flanges on said second baffle plate at opposite sides of said passages for conducting the spent cooling air therefrom.

3. In an internal combustion engine having a plurality of the cylinders provided with cooling fins and arranged side by side, the combination of means for conducting air against the upstream sides of the cylinders, comprising slots provided with sharp edges, baffle means at the downstream sides of the cylinders provided with slots disposed opposite said first mentioned slots and of smaller area than said first mentioned slots, and turbulence creating means located in the intercylinder stream of air.

4. In an internal combustion engine having a plurality of the cylinders provided with cooling fins and arranged side by side, the combination of means for conducting air against the upstream sides of the cylinders, comprising slots provided with sharp edges, baffle means at the downstream sides of the cylinders provided with slots disposed opposite said first mentioned slots and of smaller area than said first mentioned slots, and baffle means provided with a sharp edge located adjacent said fins at a point between said first and second mentioned slots.

5. In an internal combustion engine having at least one cylinder provided with cooling fins, the combination of means for conducting a stream of air under pressure to one side of said cylinder for flow therearound, a baffle plate at the other side of said cylinder extending toward and having an edge disposed closely adjacent to the fins of said cylinder, said baffle plate being arranged at an angle to said stream so that said stream impinges against said baffle plate to create turbulence in the air adjacent to said fins, and additional baffle means adjacent to said baffle plate and disposed between said air stream conducting means and said edge of said baffle plate, said baffle means projecting toward and having an edge disposed adjacent to said fins for intercepting said stream to direct said air between said fins and create further turbulence in said stream adjacent and between said fins.

6. In an internal combustion engine having at least one cylinder provided with cooling fins, the combination of means for conducting a stream of air under pressure to one side of said cylinder for flow therearound, baffle means at least partially enclosing the other side of said cylinder, said baffle means having edges closely adjacent to said cooling fins providing an opening adjacent said cylinder through which at least part of said stream flows, and additional baffle means interposed between said opening and said air stream conducting means extending toward and terminating closely adjacent to said fins to direct air between said fins and having a relatively sharp edge intercepting said stream for creating turbulence therein as it flows over and between said cylinder fins toward said opening.

7. In an internal combustion engine having at least one cylinder provided with cooling fins, the combination of means for conducting a stream of air under pressure to one side of said cylinder, baffle means at the other side of said cylinder having an opening therethrough having edge portions substantially in contact with the outer edges of said fins for guiding said air stream over said fins, and additional baffle means disposed on opposite sides of said opening and between said opening and said air stream conducting means and projecting inwardly toward and having free edges substantially in contact with said fins for intercepting said stream to create turbulence in the air flowing over and between said fins.

MARCEL PIRY.

REFERENCES CITED

The following references are of record in the file of this patent:

UNITED STATES PATENTS

Number	Name	Date
1,480,866	Smith	Jan. 15, 1924
2,302,298	Cox	Nov. 17, 1942
1,123,403	Seaman	Jan. 5, 1915
2,184,345	Hersey	Dec. 26, 1939
2,330,065	Lucke	Sept. 21, 1943
1,632,207	Van Toff	June 14, 1927
2,152,043	Gregory	Mar. 28, 1939
1,429,130	Dutton	Sept. 12, 1922
2,004,040	Dintilhac	June 4, 1935
2,070,565	Dintilhac	Feb. 16, 1937

FOREIGN PATENTS

Number	Country	Date
799,359	France	Apr. 4, 1936
591,762	France	July 17, 1925

June 13, 1950 P. KLOTSCH 2,511,823

INTERNAL-COMBUSTION ENGINE

Filed April 15, 1946 4 Sheets-Sheet 1

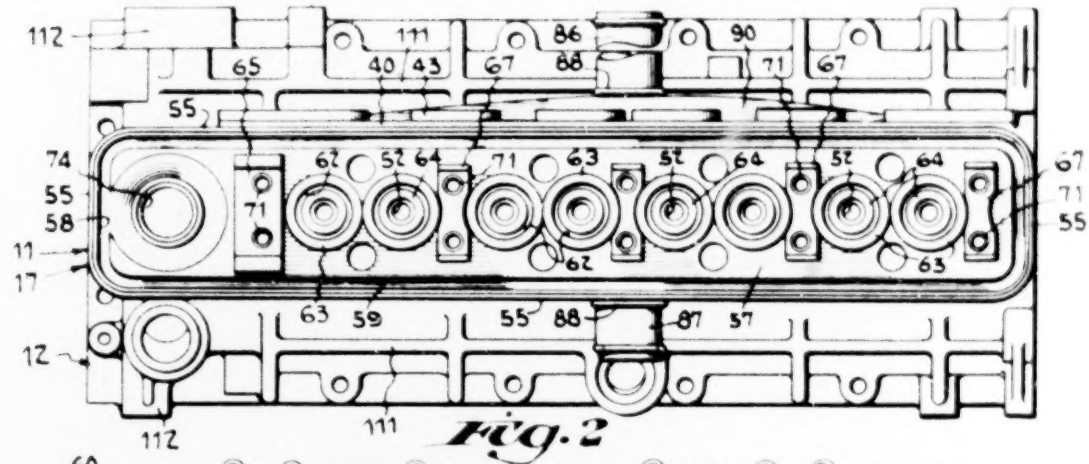

Fig. 2

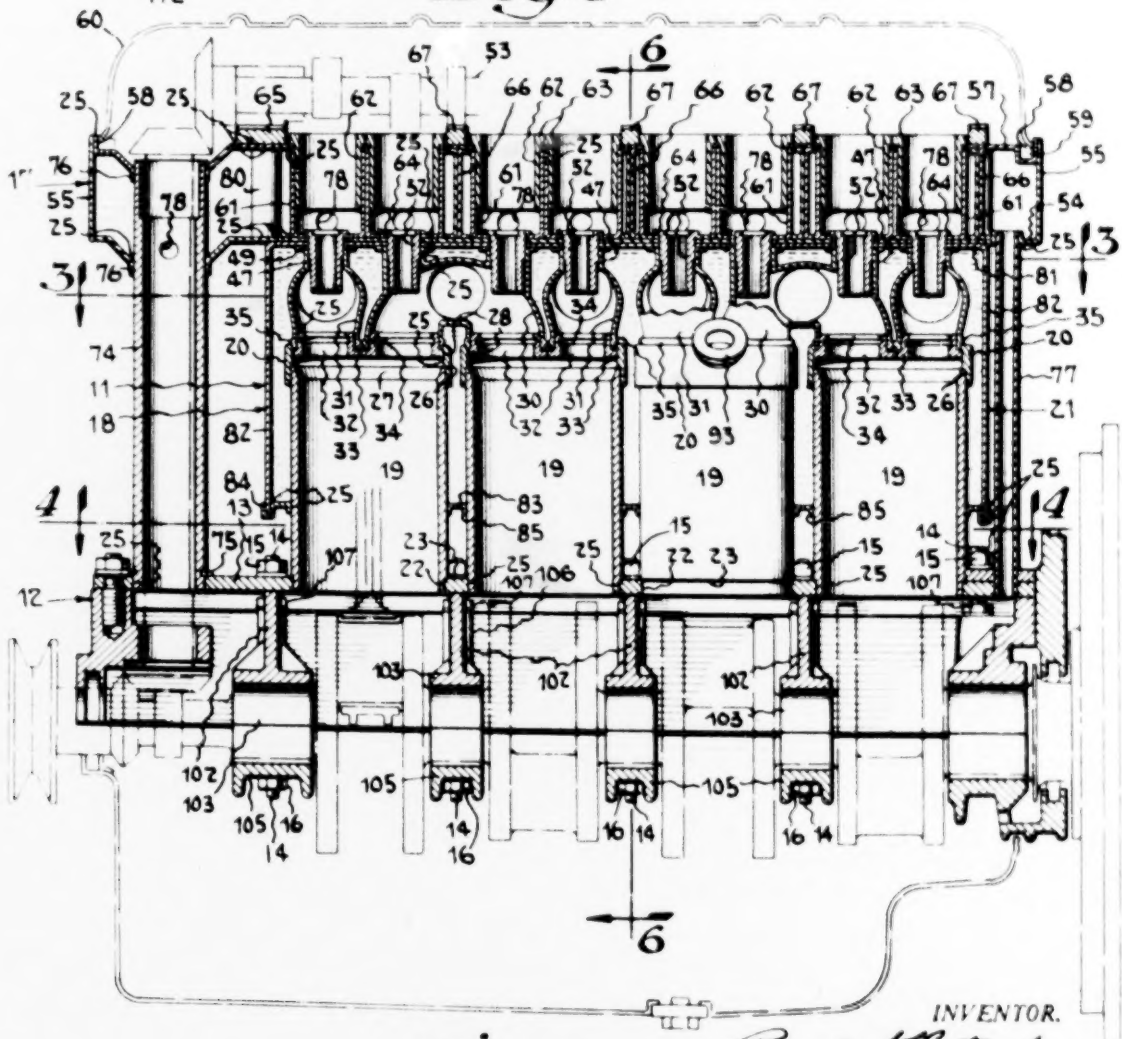

Fig. 1

INVENTOR.
Paul Klotsch
BY
Wood, Arey, Herrm & Evans
ATTORNEYS

June 13, 1950 P. KLOTSCH 2,511,823

INTERNAL-COMBUSTION ENGINE

Filed April 15, 1946 4 Sheets-Sheet 2

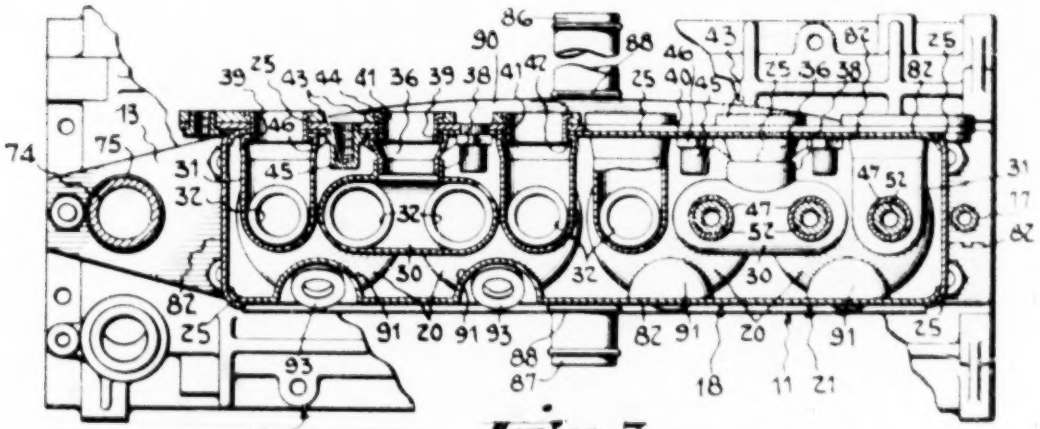

Fig. 3

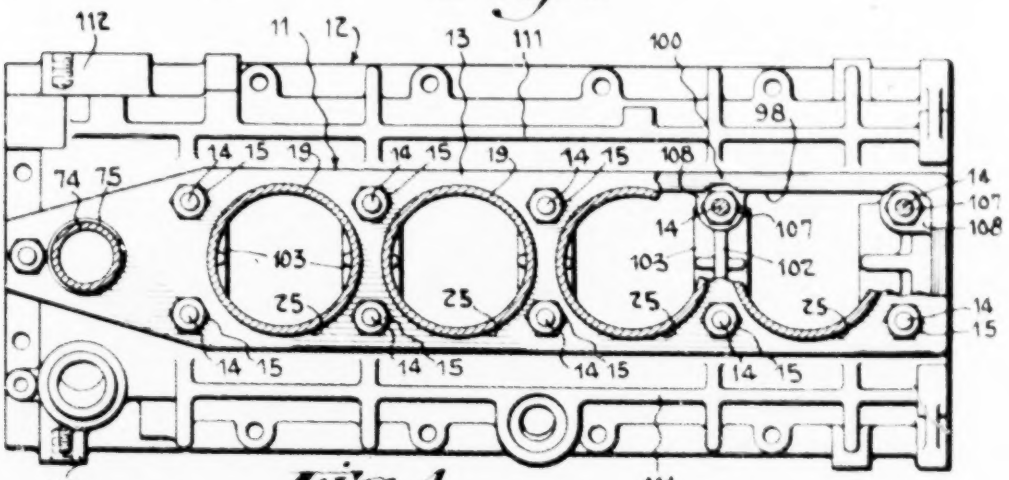

Fig. 4

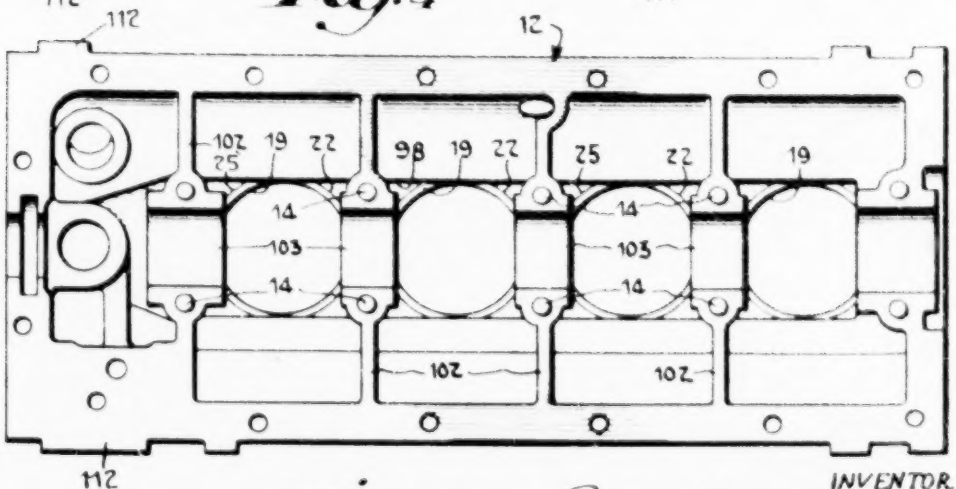

Fig. 5

INVENTOR.

Paul Klotsch

BY

Wood, Arey, Herzm & Evans

ATTORNEYS

June 13, 1950 P. KLOTSCH 2,511,823

INTERNAL-COMBUSTION ENGINE

Filed April 15, 1946 4 Sheets-Sheet 3

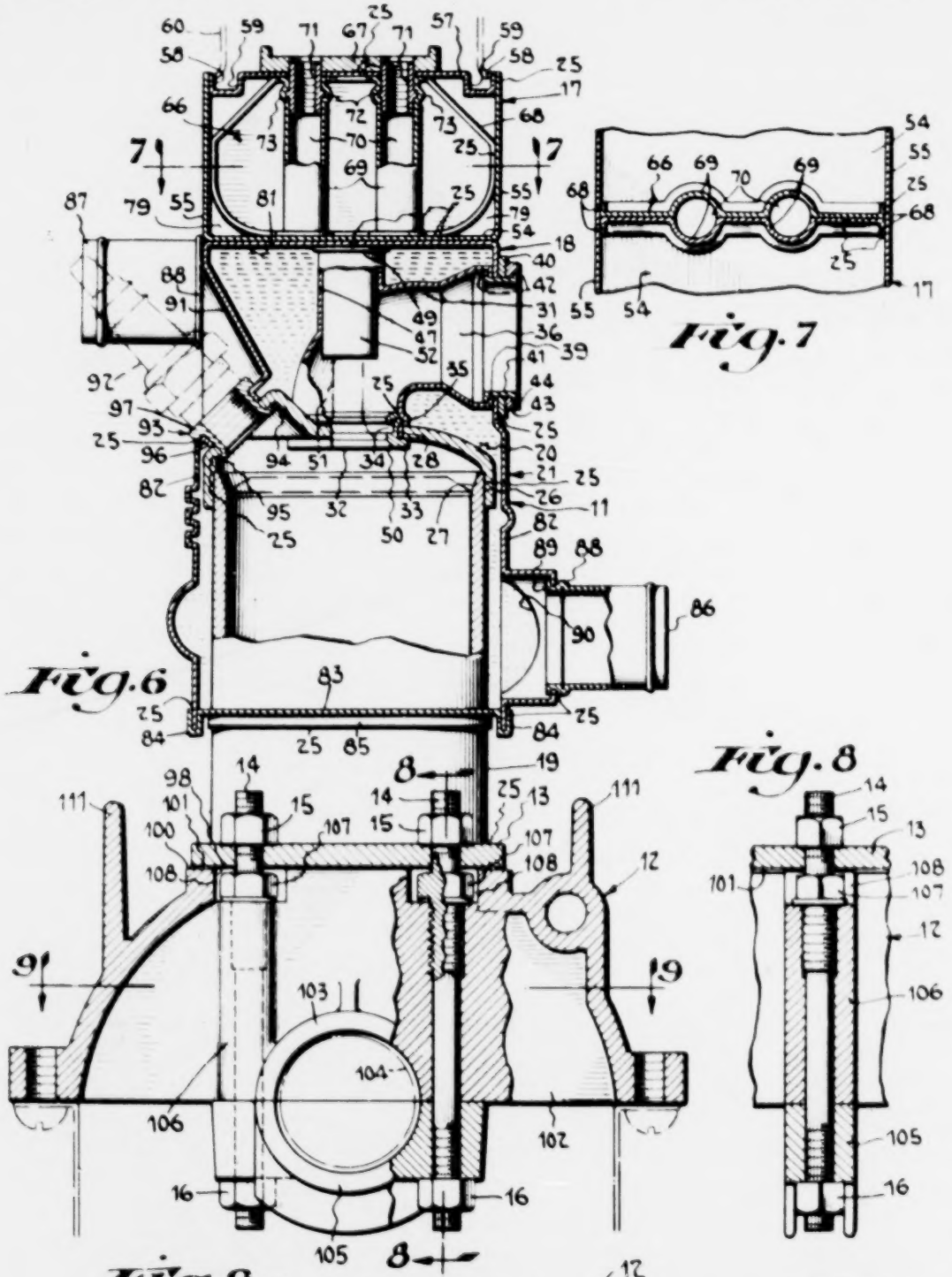

Fig. 6

Fig. 7

Fig. 8

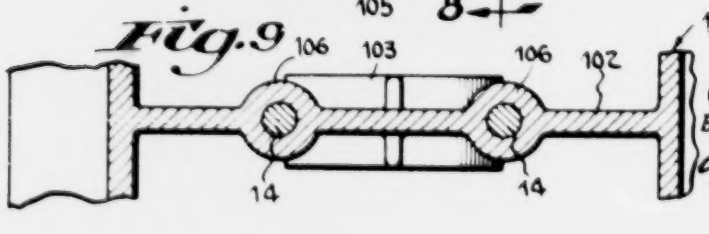

Fig. 9

INVENTOR.
Paul Klotsch
BY
Wood, Arey, Herron & Evans
ATTORNEYS

June 13, 1950 P. KLOTSCH 2,511,823

INTERNAL-COMBUSTION ENGINE

Filed April 15, 1946 4 Sheets-Sheet 4

Fig. 10

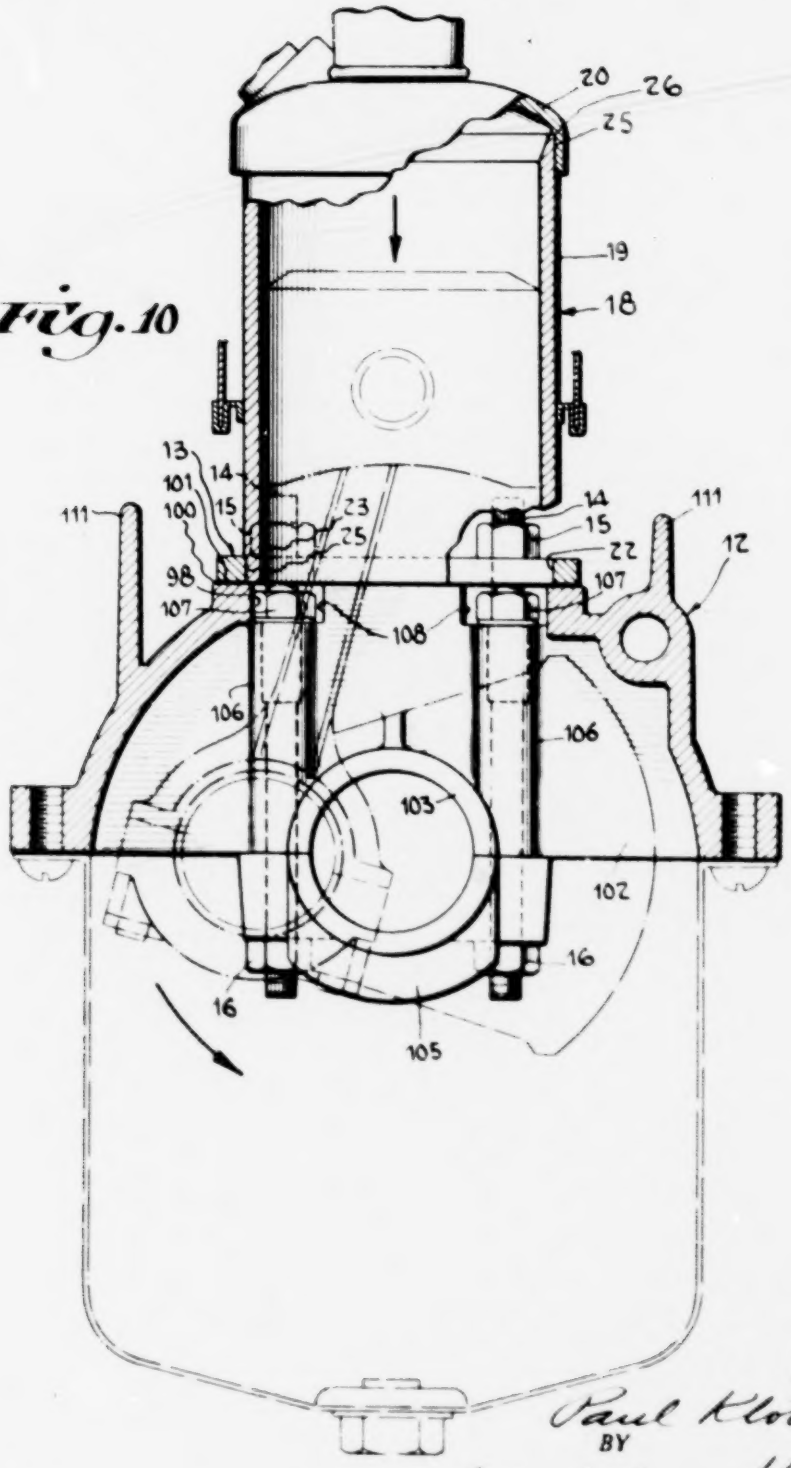

INVENTOR.
Paul Klotsch
BY
Wood, Arey, Herman & Evans
ATTORNEYS

Patented June 13, 1950

2,511,823

UNITED STATES PATENT OFFICE

2,511,823

INTERNAL-COMBUSTION ENGINE

Paul Klotsch, Cincinnati, Ohio, assignor to Crosley Motors, Inc., Cincinnati, Ohio, a corporation of Ohio

Application April 15, 1946, Serial No. 662,323

18 Claims. (Cl. 123—195)

1

This invention relates to an internal combustion engine and to a method of fabricating it. The invention is described particularly in relation to a four cylinder, four cycle, water-cooled gasoline engine suitable for use in a light automobile, but is suitable for many other uses such as for propelling motor boats, for driving dynamos and the like. Also, the structure of the engine and the principles involved in its fabrication are readily susceptible to use in engines of greater size and horse-power and in air-cooled engines, and in compressor machines.

The principal objective of this invention has been to provide an engine in which the strength and rigidity characteristic of a structure fabricated from castings or forgings are combined with the light weight, high efficiency, and low cost of manufacture of an engine fabricated from sheet metal stampings and thin wall members, without the disadvantages usually attending either type of construction.

Two main concepts of fabrication or production have been utilized to obtain this result. In the first place, the engine as a whole comprises a cylinder block which is constructed of stamped or formed thin wall elements or members, and a cast, or die-cast light weight crankcase which furnishes the foundation for the engine block. These two primary structural members are made separately and independently of one another and are fastened together by bolts and nuts. Together these static parts withstand all of the forces generated in the operation of the engine. Their functional cooperation in assembly provides a structure of high rigidity, both longitudinally and laterally.

The second of the main features of the invention is based upon the concept of associating the stamped or formed thin wall elements which form the engine block assembly by frictional or press fits, and then uniting the various elements one with another into permanent assembly by brazing. This principle of fabrication is employed throughout the engine block even including the assembly of those parts which are subjected to the most severe strains, and temperature, such as the cylinders and heads, the manifolds and valve seats, and the bottoms of the cylinders, one to another. In this manner threading and tapping operations are eliminated, no gaskets whatsoever are needed or used, and thin wall smooth surface sections are presented at critical areas subjected to high heat and high stress to contribute their high cooling efficiency to best advantage.

2

In more detail, the engine block consists essentially of a simple flat base plate having cylinder tubes press fitted and brazed to bores therein. Each cylinder barrel, constituted by a thin-walled tube of alloy steel, has a thin-walled pressed steel cap or head at its upper end, the critical joint between the two being constituted by a brazed press fit. The upper or head ends of the cylinder barrels are cross braced, one to another, through truss-like bridges constituting manifold members which are press-fitted and brazed to the cylinder caps and, on top of this manifolding, a valve box is utilized comprising sheet metal elements which also are fastened together by brazing. By virtue of the strength and rigidity of the union of the cylinders with the base plate at their lower ends, and the union of the cylinder heads to the manifolds at their upper ends the valve box is relieved of the duty of furnishing additional strength and, therefore, is fabricated primarily with regard to cooling and to lubrication functions.

This assembly is contained within a sheet metal shell, the space between the shell and the cylinder tubes forming a water jacket encasing the circumference of each cylinder barrel, the cylinder head, the manifolds and the valves contained within the manifold. From top to bottom of the block, the assembly is devoid of gaskets at pressure areas. This construction is of utmost importance in relation to the problem of corrosion, for, if exhaust gases are permitted, through faulty gaskets, to escape into the water of the cooling system and water becomes acid and soon the metal becomes pitted and corroded. In a cast engine block having thick walls such corrosion is of no great importance but, where the metal parts are constructed of light gauge sheet steel it is apparent that the metal soon would be perforated by pitting of an otherwise minor nature, and the engine would be rendered useless. However, even uncontaminated water is corrosive to sheet steel more than to cast metal and it has been discovered that the corrosion from this source may be eliminated entirely by applying a thin continuous moisture and corrosion resistant film of resin over all of the interior water jacket surfaces by pumping resinous finishing material, in liquid form, through the water jacket, then draining the water jacket and baking the finish. The high heat transfer efficiency of the thin wall structural elements of the engine block permits this coating to remain unimpaired throughout engine

life despite the high combustion temperatures which exist within the cylinders and within the manifolds at the opposite sides of the metal members to which the coating is applied.

Except for the cylinder barrels and valve seats, the engine block members are formed of sheet steel; the barrels and valve seats are made of high carbon alloy steel capable of being hardened by quenching in air. For erection of an engine block constructed in this manner, the various parts are dimensioned together in self-sustaining frictional or press-fit engagement, brazing material is applied at the joint areas in suitable manner, and the assembly is then passed through a brazing furnace or brazing oven which has the double function of heating all of the parts to brazing temperature and of heating the cylinder barrels and valve seats to hardening temperature. Subsequently the assembly is air quenched to set the brazing material and, simultaneously, to lower the temperature of the cylinder barrels and valve seats below critical or hardening temperature, after which the assembly is allowed to cool slowly for relieving any strains that may have been set up in the brazing operation. This single operation therefore unites the parts and hardens those surfaces of the engine which are subjected to mechanical wear during operation.

The crankcase is a heat treated aluminum casting, except for heavy steel bolts which are set in it. These bolts are disposed in transverse webs, two bolts per web, the webs being located one on each side of each cylinder so that the base of each cylinder is nested among four heavy bolts. Each bolt protrudes above and below the web in which it is set and held against axial displacement.

The protrusion of the base bolts above the webs is utilized for attaching the flat base plate of the cylinder block to the crankcase upon which it bears. The protrusion of the bolts below their supporting webs is utilized to secure the lower half of each crank shaft bearing to the upper crankcase and, therefore, to the engine block. Consequently each crank bearing is sustained from the engine block just as though it were an integral part thereof. The crankcase therefore has only the primary structural duty of furnishing pads upon which the motor may be mounted to a chassis or frame, aside from its function as a housing for lubricant. As a result, it is very light in weight.

While the salient features of the present engine and the mode of fabrication have been discussed in the foregoing portion of the specification, other improvements of a somewhat more detailed nature also are disclosed in the following detailed description of the drawings in which a typical embodiment of the apparatus is illustrated.

In the drawings:

Figure 1 is a longitudinal vertical sectional view taken centrally through the cylinder block and crankcase assembly.

Figure 2 is a top plan view of the assembled cylinder block and crankcase.

Figure 3 is a longitudinal sectional view taken on line 3—3, Figure 1, illustrating the arrangement of the several intake and exhaust conduits and valve ports with respect to the cylinder heads.

Figure 4 is a longitudinal sectional view taken on line 4—4, Figure 1, showing the cylinders, base plate, crankcase, and the arrangement of studs securing the base plate to the crankcase.

Figure 5 is a view of the assembly of Figure 4 as seen from the bottom or crankcase side thereof, showing the crankcase construction and its relationship to the cylinder block assembly.

Figure 6 is an enlarged longitudinal cross sectional view taken on line 6—6, Figure 1.

Figure 7 is a cross sectional view taken on line 7—7, Figure 6, illustrating the construction of one of the struts in the upper portion of the cylinder block assembly.

Figure 8 is a vertical sectional view taken on line 8—8, Figure 6, illustrating one of the fastening studs with respect to the cylinder block base plate, crankcase and lower bearing cap.

Figure 9 is a horizontal cross sectional view taken on line 9—9, Figure 6, showing one of the stiffening webs of the crankcase with the studs located therein.

Figure 10 is a sectional view similar to Figure 6, showing the crankcase and cylinder assembly with the crank shaft, the connecting rod and piston being shown in phantom lines to illustrate the application of the explosive forces to the crank shaft with respect to the static parts of the engine.

The assembly shown in the drawings, in general, comprises a sheet metal cylinder block unit indicated at 11, and a crankcase indicated at 12. The cylinder block, as an integral assembly, includes a base plate 13 to which the lower ends of the cylinders are brazed. This base plate is seated upon the crankcase 12 and is secured in place by studs 14 and the nuts 15 thereon. The studs, which are preferably of alloy steel for high tensile strength, pass through the crankcase and are anchored at their lower ends in the lower bearing caps of the crank shaft bearings by means of the nuts 16 screwthreaded thereon. The pressure of combustion generated in the cylinders to force the pistons downwardly is of considerable magnitude, tending to force the cylinder block upwardly and the crankshaft downwardly. Since the crank shaft is carried by the lower bearing caps and the bearing caps are tied directly to the cylinder block by the studs 14 in tension, the disruptive stresses are substantially absorbed by the studs with little or no direct stresses in tension exerted on the crankcase.

Engine block 11, as shown in Figure 1, is, in effect, subdivided and consists essentially of an upper section, generally indicated at 17, providing support and housing means for the valve actuating mechanism, and a lower section, generally indicated at 18, including the base plate 13, cylinders, cylinder heads and valve bonnets or conduits.

The upper block section 17, in cross section, consists of a closed rectangular box-like casing with internal cross ribs and sleeves to resist the compression forces developed between the cam shaft and the lower ends of the valve springs. The compression pressure of the valve springs is imposed upon the bottom wall of the section 17 and the cam shaft is secured upon the top wall, thus setting up compression forces between the top and bottom walls tending to disrupt or force them apart. The structure is appropriately reinforced at the stressed areas to resist these forces substantially without deformation, and being an integral unit, absorbs the stresses and substantially isolates them from the lower section 18.

At the lower section of the block the cylinder barrels are received within bores in the base plate 13, in press-fitted relationship thereto, whereby

a joint is provided, after brazing, which is very strong, both laterally and longitudinally. It will be understood that the structure of the present invention is intended for use in the fabrication of multi-cylinder engines, the particular number of cylinders being optional. In the present disclosure a four-cylinder engine is illustrated but the identical construction is applicable to engines having a number of cylinders greater or less than four.

The upper ends of the cylinders include heads or closures 20 provided with valve ports, valve bonnets and spark plug bores. The upper portions of the cylinders, cylinder heads, and valve bonnets or conduits all are enclosed by a sheet metal water jacket 21 which is substantially rectangular in cross section; and the jacket includes a top wall upon which the upper section 17 is mounted. Water jacket 21 extends downwardly to cover the cylinder for the approximate area of piston travel and includes a lower wall through which the lower ends of the cylinders project to join the base plate 13.

Described in detail with particular reference to Figure 1 of the drawings, showing the complete assembly, the cylinder block unit 11 constituting a brazed assembly, is shown mounted upon the crankcase. The cylinders 19 of the cylinder block and the valve seats, are formed of seamless drawn steel or steel alloy tubing, having an appropriate wall thickness, for example, from $\frac{1}{16}$" to $\frac{3}{32}$", while the remainder of the elements are stamped from sheet steel.

The base plate 13 is formed from relatively heavy gauge steel, for instance, $\frac{1}{4}$" steel plate, having its bottom surface machined to provide a sealed joint with the upper surface of the crankcase. The plate includes a series of apertures 22 into which are fitted the lower ends of the cylinders 19. For the purpose of providing a stop to regulate the position of the cylinders in the plate, the cylinders are counterturned to provide shoulders, as at 23. With the cylinders located within the plate, a copper brazing ring is applied to the lower portion at the juncture of the cylinder with the base plate 13. This wire completely encircles the cylinder and when the assembly is heated in the brazing furnace, the wire fuses and flows into the crevice between the aperture and the base of the cylinder, completely filling the crevice and securely uniting the cylinder to the base plate. Similar brazed joints uniting various other parts of the assembly all are indicated by the numeral 25 throughout this description. Brazing paste may be used in place of copper or brazing wire when more convenient to apply.

The upper ends of the cylinders are provided with closures or cylinder heads 20 preferably formed of thin wall cold drawn steel stampings to facilitate rapid heat dissipation. The top of the cylinder heads are domed upwardly and the interior diameter of the flange of each cylinder head includes a counterbored portion 26 into which the upper end of the cylinder 19 is press-fitted. A brazing wire applied at this point encircling the cylinder, enables the brazing material to flow by capillarity into the crevice thereby providing a gas-tight seal and securely uniting the cylinder head to the cylinder.

The internal diameter of the cylinder at the upper portion may include a chamfer or outwardly tapered portion 27 merging generally with the inside wall of the cylinder head. The chamfered portion, starting at the lower line of juncture

with the cylinder wall and including the cylinder head, forms the combustion chamber for the engine, the line of the chamfer coinciding approximately with the upper limit of the piston travel. This arrangement avoids an excessive wall thickness at the joint and permits rapid cooling, the combustion chamber being substantially surrounded by the water in the jacket.

A further advantage, in relation to engine performance, is believed to be contributed by this detailed construction. Machining of the cylinder head by counterboring and machining of the cylinder barrel by counterturning to mating diameters providing a press fit, insures such continuity of contact between the two parts that, after brazing, an assembly is provided having the characteristics of an integral structure. This arrangement, therefore, enables attachment of the head to the cylinder through a bond which is sufficiently strong to sustain the high disruptive forces attending each explosion in the cylinder. On the other hand, this thin wall structure, coupled with the inward chamfer on the end of the cylinder barrel and the thin wall construction of the head, is believed to provide sufficient momentary yieldability or expansibility to prevent preignition of the fuel and knocking. While the exact force reactions occurring at the moment of explosion are not known, still it is believed that either the cylinder or head, or both, may expand outwardly enough to relieve the exceptionally high compression values which commonly are considered to attend the development of engine knock. At any rate, the engine does not knock, even under adverse load and adverse fuel conditions.

Each cylinder head 20 is provided with a pair of ports or openings 28—28 into which are fitted the valve bonnets, or conduits, 30 and 31 respectively, the bonnets 30 being for intake bonnet and the bonnets 31 being for exhaust. Fabrication of the valve inserts and valve bonnets and the assembly and joining of these parts to the cylinder heads is the subject matter of the co-pending application of Herbert P. Junkin for Metallic structures and method of fabricating same, filed September 13, 1945, bearing Serial No. 616,004, now Patent No. 2,486,654, to which attention is invited. A brief description of this construction is as follows:

Ports 28—28 include bushings or valve seat inserts 32, each bushing including a head or annular base 33 disposed at the inside of the cylinder, and a shank portion 34 extending upwardly above the top of the cylinder head. The head 33 seats against the inner side, serving as an abutment for the bushing. This head later is machined to form a valve seat.

The lower ends of the valve bonnets are provided with an external peripheral bead 35, the bead defining a rim designed to fit snugly within the ports 28—28, and also serving as a stop or abutment, bearing against the top surface of the cylinder head. At the interior, the rim telescopically receives the shank portion 34 of the bushing, the shank being pressed snugly within the rim portion of the conduit. The shank is then deformed by radially expanding a circumferential portion of it outwardly into the area of the bead 35, by means of suitable dies. Shank 34 is thus clinched to the bead 35. The assembled parts, by means of a suitable brazing ring, or subsequently bonded together in the brazing furnace, whereby the brazed joint 25 provides a strong gas and fluid tight seal.

As shown in Figures 1 and 3, the intake valve bonnets 30 connect the cylinder heads in pairs and are in the form of U-shaped conduits having lateral nipples 36 at their upper central portions. The nipples 36 extend through the water jacket 21. Conduits 36 are arranged to be connected to an intake manifold, which is not shown since it may be of conventional construction.

The lateral conduit 36 of each intake bonnet 30 is secured at its inner end by brazing as indicated at 25 (Figure 3), the conduit being provided with an annular flange 38 telescopically to receive the inner end of the conduit in press-fit connection. The conduit flares outwardly from this point and includes an annular inturned lip or flange 39 which lies against the inside surface of the water jacket 21 as shown in Figures 3 and 6.

A stiffener plate 40, formed of relatively heavy gauge sheet metal is brazed as at 25 to the outside of the water jacket 21 and extends for the full length thereof. This plate reinforces the jacket to permit it to support the weight of the exhaust and intake manifolds and facilitates attachment of the manifold outlets.

The flanges 39 of the lateral conduits 36 are engaged respectively by short thimbles or collars 41 having annular outwardly turned flanges, 42—42 at the opposite ends thereof. These collars are formed from seamless light gauge tubes, the flanges being formed by deforming or upsetting the ends. Ferrules or rings 43 are disposed at the outside of the plate 40 and include grooves 44 to receive the exterior flanges 42 of the collars 41. Thus, each collar 41 extends through its ring and through the openings in the water jacket and stiffener plate and the ends are upset to form the flanges 42—42, thus clinching the assembly securely together.

It will be apparent that the collars 41, in effect, form a liner sealing off the joints between the water jacket and stiffener plate, thus eliminating several joints, and additionally strengthening the assembly. After assembly, the joints are brazed as indicated at 25 to provide a gas and fluid tight seal.

As shown, an exhaust valve bonnet 31 is provided individually for each cylinder. These bonnets or conduits are in the form of right angle elbows, being respectively connected at opposite ends to the cylinder heads and outlet openings in the water jacket and stiffener plate to communicate with an exhaust manifold. These conduits are joined to the cylinder heads and to the stiffener plate, as shown in Figure 6, in the same manner as the intake bonnets 30 previously described.

From this detailed description, it will be seen that the upper ends of the cylinder barrels are joined together by the U-shaped rigid intake bonnets which are interconnected with the heads thereof. This holds the upper ends of the cylinders against longitudinal displacement with respect to one another. However, the upper ends of the cylinders also are connected by the right angle exhaust bonnets to the stiffener plate 40 and in view of the close spacing of the cylinders and bonnets the cylinders are thus prevented from lateral movement with respect to one another. This is of particular importance in view of the lateral thrusts to which the cylinders are subjected during successive power and compression strokes when the engine is in operation.

As previously indicated, the intake and exhaust manifolds may be of conventional construction and they are adapted to be fastened to the stiffener plate 40 by means of screws which engage a series of thimbles 45 extending into the interior of the water jacket. These thimbles are screw machine parts provided with shoulders 46 which abut the interior wall of the stiffener plate, the projecting portions of the thimbles being appropriately crimped and brazed in position so that they do not turn when the manifold screws are tightened. The screw threaded bores in the thimbles are blind and the escape of water at these points thereby is prevented. To facilitate gas-tight connection of the manifolds to the engine the faces of the ferrules 43 are machined to present a finished plane surface which preferably does carry a gasket. It is to be noted, however, that this gasket is beyond the confines of the water chamber and any leak might impair operating efficiency but will not cause corrosion problems.

In the preferred structure, the valve bonnets 30 and 31 are formed of light gauge sheet metal stampings, for example, metal approximately $\frac{1}{16}$" thick. Since the bonnets are not exposed to the direct combustion pressure in the cylinders, serving only as passageways for the vapor and burned gases when the valves are open, they are formed of light gauge sheet metal which facilitates rapid dissipation of heat to the cooling water by which the bonnets are surrounded.

At the top of each of the bonnets 30 and 31, an upwardly projecting sleeve 47 is formed integrally with the bonnet to contact the top wall of the water jacket at the underside thereof. The end of the sleeve includes a lateral flange 49 having facial engagement with the wall to strengthen the joint mechanically and to provide an increased sealing area with respect to the adjoining surfaces of the sleeve and water jacket wall. If desired, the flange 49 may be in the form of a flange formed integrally with the upper edge of the sleeve 47. The assembled joint is brazed, as at 25, to produce a strong and rigid water-tight joint between the wall and the top of the valve bonnet sleeve. Both the intake and exhaust valve bonnets are provided with identical sleeves 47, and the joint in each instance is formed as above described.

For a four cylinder engine fabricated in accordance with the present invention, each cylinder head includes respective exhaust and intake ports 28—28. The exhaust ports are provided with individual bonnets 31 and the intake ports are connected in pairs to the respective intake bonnets 30 each bonnet thus serving two cylinders. The valve inserts or bushings 32 are common to both sets of intake and exhaust ports and are identical in construction with the exception that the intake bushing is made slightly larger in diameter than the exhaust bushing for more efficient engine performance.

Levelled valve seats 50 are provided on the inner edges of the inserts 30 by machining after the engine block has been assembled and brazed. Thus, in Figure 1, the inserts are shown before machining, and in Figure 6, the inserts are shown after machining. These seats are engaged by poppet type valves 51 which are indicated by the broken lines on Figure 6. Both the valve inserts and cylinder bonnets, as previously indicated, preferably are made of a high carbon, air hardening alloy steel, such as "Athenu," and the seats and walls may be finished by grinding or lapping to form smooth true surfaces.

The stems of the valves 51 project upwardly and slide within valve stem guides (not shown) which are pressed into guide bushings 52 inserted and brazed in place within the sleeves 47 of the respective valve bonnets 30 and 31. The upper

ends of the valves 31 are provided with suitable springs, cam followers and guide mechanism (not shown) and are actuated by an overhead cam shaft 53 as shown in broken lines on Figure 1.

The upper valve housing unit 17 essentially comprises a rectangular casing having a bottom wall 54 and side and end walls 55. It is formed preferably of a light gauge sheet metal stamping, open at the top and subsequently closed by a cover plate 57 which is brazed in place after the interior parts of the casing have been assembled. For this purpose, the cover plate includes an upstanding marginal flange 58 which is adapted to fit within the side and end walls 55 of the casing to form a flanged joint, the surfaces being joined by brazing as indicated at 25. This arrangement further provides a trough or recess 59, approximately square in cross section, formed by depressing a marginal area adjacent the flange 58 and extending around the four sides of the cover plate. The recess 59 serves to retain a gasket (not shown) upon which is seated the lower edges of a top closure or cover 60, shown in broken lines on Figure 1.

Casing 17 as shown in Figures 1 and 2, includes a plurality of cylindrical drawn sheet metal receptacles or cups 61 disposed interiorly thereof, the bottoms of which rest upon the bottom wall 54 while the upper ends abut the underside of the cover plate 57 to which the upper ends of the cups are brazed. Each of the cups 61 is further provided with a prefabricated cylindrical sleeve or liner 62, which includes a head or flange 63 at the top providing a shoulder seated upon the top cover plate 57. The sleeves are telescopically fitted within the cups 61 and brazed thereto. These sleeves serve to house and guide the cam followers, the followers being of cylindrical form and making a sliding fit therein. The valve springs are under compression between the follower and the bottom of the cups 61. These parts form no part of the present invention and therefore are not shown in the drawings.

The valve guide bushings 52 are disposed in axial alignment centrally within the cups 61, extending downwardly through openings in the cups and through openings in the bottom of the casing and water jacket. The lower portion of each bushing fits telescopically within the sleeve 67 of the valve bonnets 30 and 31, as previously described. Each valve bushing 52 includes a head 64 at its upper end providing a shoulder which is seated upon the bottom surface of the cup 61 where it is brazed in place as at 25. In practice the valve inserts 32, guide bushings 52 and the cups and sleeves 61 and 62 are pressed into assembly as closely in axial alignment as is practicable. However, due to allowable tolerances and other variations incident to stampings of this nature and to production methods of manufacture and assembly, minor variations in the parts are likely to be present. In order to compensate for these variations, the valve inserts 32, guide bushings 52, and the cups and sleeves 61 and 62 are arranged to be machined in assembly and line reamed or ground and lapped to provide the necessary finish and clearance for efficient operation of the valve stems and associated parts.

In order to strengthen and rigidify the casing 17 and additionally to provide supports for the cam shaft bearings, a series of transverse struts or webs 66 (Figure 7) are disposed interiorly of the casing, each preferably being disposed immediately beneath a cam shaft bearing mounting

pad 67 respectively, a number of these pads being provided to support the cam shaft appropriately. The webs comprise relatively light sheet metal stampings, and each web is made up of two symmetrical stampings, preferably brazed together, providing oppositely extending right angle flanges 68 (see Figures 6 and 7). Each web is further provided with a pair of vertical semi-circular corrugations 69—69 which form cylindrical sleeves 70 when the opposite halves of the webs are placed face to face. The upper ends of the sleeves 70 are arranged telescopically to receive a threaded bushing 71, which extends through an opening in the top cover plate 57 and bearing block 67. The lower shank portion of each bushing includes a peripheral flange 72 engaged by a bead 73 formed in the upper portion of its cooperating sleeve 70. The threaded bushings 71 are arranged to receive the screws (not shown) for mounting the cam shaft bearings. This structure provides a rigid support for the bearings, there being provided one assembled web for each bearing respectively.

At the forward end of the casing 17 a main cam shaft bearing pad 65 is located. The mounting for this bearing is reenforced by means of a pair of cylindrical sleeves 80 preferably of light gauge sheet metal, brazed as at 25 to the upper and lower wall of the casing 17.

In assembly the webs 66 and flanges 72 of the sleeves are positioned within the beads 73, the two halves being secured together with the threaded bushings being disposed within the sleeves. The assembled webs are placed within the casing 17, the cups 61 and valve guide bushings likewise being in assembled relationship within the casing. After this the cover plate 57 is placed in position and the bearing pads 67 located upon the top surface of the plate in engagement with the projecting upper ends of the threaded bushings 71. The casing is now completely assembled in place upon the top of the water jacket and the various joints indicated at 25 are ready for brazing when the assembly is placed in the brazing furnace. The joint 25 between the water jacket and casing is formed preferably by a sheet of [illegible] material placed between the parts.

At the forward end of the engine a vertical tube 74 is provided to communicate with an opening in the base plate 13 at its lower end. This tube passes through the lower and upper walls of the casing 17 and at its lower end includes a flat washer 75 seated within a groove formed in the tube. The washer provides a shoulder which rests upon the upper surface of the base plate 13. This serves to position the tube properly with respect to the base plate and the tube is securely joined to the base plate by means of the brazed joint indicated at 75, providing a fluid tight seal at the base of the tube. The upper end of the tube is also joined to the casing by brazing, flanges 76—76 formed in the upper and lower walls 57 and 54 of the casing being used for this purpose.

Tube 74 houses a vertical drive shaft shown in broken lines shown in Figure 1. This shaft includes bevel gears at its upper and lower end respectively which mesh with bevel gears keyed to the crank shaft and cam shaft. The drive from the crank shaft is transmitted to the cam shaft in this manner.

The rearward end of the cylinder block assembly is likewise provided with a vertical tube 77, communicating with the interior of the casing

17 at its upper end and extending through the base plate 13 at its lower end to communicate with the crankcase. Tube 77 serves as an oil return conduit. The engine is provided in any suitable manner with an oil pump for maintaining a flow of oil from the crankcase to the cam shaft and the cam actuated mechanism which is associated therewith.

For lubrication, cups 61 are provided with openings 78 which permit the excess of oil to drain from the interior of the receptacle. This oil ultimately flows back to the crankcase through the return conduit 77. To permit the return of excess oil, the lower portions of the webs 63 are curved as shown in Figure 6 thus providing openings 79 permitting free passage of the oil.

The water jacket 21, shown in the drawings, consists essentially of sheet metal stampings generally rectangular in cross section comprising a top wall 81 and side and end walls 82, the side and end walls being overlapped and brazed at the corners as at 25 (Figure 3). The jacket extends downwardly of the cylinders approximately to the lower limit of piston travel and the bottom is formed by a panel 83 which is joined to the lower edges of the side and end walls 82 by means of the lapped, brazed seam 84. A series of openings defined by the vertical circular flanges 85 in the bottom panel encircle the cylinders 19. These joints are likewise secured by brazing 25.

Intake and outlet nipples 86 and 87 respectively communicate with the interior of the water jacket serving to supply water or other coolant to the engine, the intake nipple being located at a low point for increased cooling efficiency. These nipples are connected to the cooling system of the engine in the usual manner by suitable lengths of hose. Each nipple includes a bead 88 serving as an abutment or stop, the inner end of the nipple being crimped and clinched in place as at 89 after which the parts are brazed together. In order to aid in distibuting the coolant uniformly, the water jacket includes a longitudinal outwardly expanded corrugation 90 preferably semi-circular in cross section communicating centrally of its length with the intake nipple 86. The corrugation flares outwardly from its opposite ends, thus providing an enlarged passageway relative to the cylinders to facilitate the flow of coolant.

In respect to the distribution of water through the jacket, to insure uniformity of cooling, attention is invited to my co-pending patent application, Serial Number 666,455, filed May 1, 1946, entitled Cooling system for internal combustion engines, now Patent No. 2,456,951, in which a baffle plate is disclosed containing metering apertures for regulating the amount of water delivered from the inlet to each cylinder area.

As shown in Figures 3 and 6, one side wall of the water jacket is provided with a series of recesses or depressions 91, each accommodating a spark plug 92, as shown in broken lines on Figure 6. The spark plug is in screw threaded engagement within a screw threaded bushing 93 secured in an opening in the cylinder head. The spark plugs preferably are disposed at an angle with respect to the side wall of the water jacket. Therefore, bushings 93 are mounted in an angular boss 94 formed in the top of the cylinder head 20. The bushings are secured to the respective cylinder heads by upsetting or crimping the inner ends thereof, thereby forming shoulders 95 engaging the interior surface of the

cylinder head. The recessed portions 91 of the water jacket include flange portions 96 integral therewith encircling the exteriors of the bushings 93. Each bushing is further provided with an exterior flange 97 providing a shoulder with which the sheet metal flange 96 of the water jacket is engaged. Thus, the flange 96 serves to space the interior surface of the water jacket from the cylinder head. At the same time, the flange 96 and the head are in compressed engagement with one another between the flanges 93 and 95 of the spark plug bushing. After the parts are brazed together a very strong joint is provided between these thin walled metal pieces. The arrangement permits cooling water to flow freely around the entire spark plug bushing thereby providing an effective cooling system for the tip of the plug at which the heat is most pronounced. The assembled parts are thereafter joined by brazing 25 to provide a gas pressure-tight seal with respect to the cylinder head and bushing and a fluid-tight seal between the bushing and water jacket.

The crankcase generally indicated at 12 upon which the cylinder block assembly is mounted, comprises in cross-section a semi-circular die casting, preferably of aluminum alloy. Longitudinal and transverse ribs stiffen and rigidify the structure. The casting also includes a rectangular flanged opening 98 communicating with the lower open ends of the cylinders. The upper surface 100 of this flange is faced or machined to receive a gasket 101 disposed between the flange and the base plate 13, the base plate likewise being preferably faced or machined, thereby effecting a fluid tight seal between the two surfaces.

The crankcase includes a series of transverse webs or ribs 102 disposed between the cylinders of the cylinder block. These webs are preferably four in number, one for each cylinder, and include semi-circular flanged bearing recesses 103 formed therein. These flanged recesses provide receptacles for suitable bearing liners indicated at 104, Figure 6. A lower bearing cap 105 is provided, one for each of the ribs, the caps being secured in place by the nuts 16 in screw threaded engagement in the studs 14.

Transverse webs 102 include thickened sections 106 which preferably are circular in cross section disposed in pairs straddling the bearing bosses 103. The portions 106 provide sufficient metal thickness to accommodate holes tapped and drilled therethrough to receive the studs 14. These studs further include integral hexagonal nuts 107 formed thereon which are disposed below the surface of the base plate 13 in cut-out portions 108 of the webs.

In assembly of the engine, the studs 14 may be screw-threaded and tightened in place through the webs 102. The fabricated and machined cylinder block then is positioned upon the crankcase by projection of the studs through the aligned holes of the base plate 13, after which the nuts 15 are applied to the studs and are tightened. After assembly of the crank shaft, the nuts 16 are threaded on the lower end of the studs to fasten the lower bearing caps 105 in position. This arrangement permits the removal of the bearing caps without disturbing the cylinder block since the studs 14 are in screw threaded engagement in the crankcase and the nuts 15 hold the parts in assembly.

Although the studs are screw threaded in the webs 102, the forces in tension set up in engine

operation are not transmitted to the block, but are transmitted through the studs to the bearing cap 105 as previously described. The shanks of the studs are engaged in the webs for assembly purposes and convenience in removing the crank shaft and the bearings, or for repairs, without dismantling the cylinder block from the crankcase.

It will be noted in Figures 6 and 10 that the upper edge of the webs 102 which are located between adjacent cylinders, serves as a support for the base plate in this area. Thus, each cylinder is individually supported upon a rigid integral box-like structure formed by the transverse webs and the longitudinal sides of the crankcase.

The crankcase is provided with a pair of longitudinal ribs 111 one on each side thereof. These ribs strengthen the crankcase longitudinally inasmuch as the crankcase serves as a mounting base for the entire assembly and is subjected to longitudinal forces due to the engine weight and to shocks which may occur when the engine is installed in an automobile.

The engine is mounted preferably by means of mounting lugs 112, cast integrally with the crankcase and located at the forward end of the casting. As installed in an automobile the engine mounting and drive arrangement may follow that disclosed in the patent to Powell Crosby, Jr., No. 2,253,479. This arrangement essentially consists of a rigid connection between the rear wheels and the engine, universal joints being eliminated, by permitting the engine to pivot slightly. The thrust is transmitted through a rigid tube secured at its forward end to the engine and transmission assembly and at its rearward end to the differential housing, the propeller shaft being enclosed in this tube.

The crankcase is rigidly trussed by means of the transverse ribs 102 which reenforce it against torsional forces developed in the operation of the engine and against the thrust of the rear wheels by means of the longitudinal ribs 111. Since the engine assembly is mounted upon the crankcase and the crankcase in turn is mounted upon the frame of a vehicle or other foundation, the resistance to the torque force of the crank shaft will react in an equal torque transmitted to the crankcase through the base plate 13. This force is resisted by the lugs 112 which are anchored securely and is thus absorbed by the crankcase.

The present design and organization of parts results in very substantial advantages with reference to engine performance and likewise with reference to fabrication and assembly of the parts. In connection with the latter, it will be noted that all of the parts fit snugly one within another and that stops or abutments are provided for all such parts to position them correctly with respect to each other upon being pressed home. The advantage of this arrangement is two-fold. First, it eliminates the need for jigs and fixtures to hold the parts properly located in assembly for brazing and thus effects a savings in time and expense. With the exception of the assembly of the cylinder barrels, cylinder heads and base plate which may be joined by a heavy pressure fit, the design of the remaining parts makes them capable of being pressed together by hand, preferably by the use of a simple arbor press. Those parts which are clinched together are assembled preferably by means of a hand operated tool designed for this purpose. The parts automatically locate themselves correctly upon being pressed home, due to the stops or shoulders provided for this purpose. To expedite assembly, the various parts are preferably dimensioned to make a light press fit for hand assembly and the simplicity of design permits this work to be done by relatively unskilled operators. The parts fit together with sufficient tightness to hold together by friction prior to being brazed. Second, a strong mechanical bond between the parts is insured when they are brazed because the arrangement provides contacting surfaces, with only narrow crevices within which brazing material is free to flow by capillarity. This results in an exceptionally strong union between the parts and likewise produces pressure-tight seals.

In preparing the assembly for brazing, brazing material, either in wire or paste form, is applied at the various joints required to be brazed. Since most of the parts are of cylindrical form, a wire is simply wound about the part at the joint and upon reaching the fusing temperature in the furnace the material flows into the joint by the combined action of gravity and capillary attraction. In instances where the brazing wire is necessarily applied beneath the joint, it may be secured in place by the application of a copper paste. In such instances the material flows upwardly by capillary attraction into the joint.

In order to expedite the mechanical assembly of the parts the lower and upper sections, 17 and 18 respectively, may be assembled separately, the assembled units being joined together at the time of firing in the brazing furnace. Whether or not the units are assembled independently, it is preferable that the entire cylinder block assembly be brazed simultaneously, thus achieving a relatively uniform braze throughout the assembly.

Although the valve bonnets are formed of relatively light gauge sheet metal stampings, a high degree of strength and rigidity is imparted to them as a result of their formation. This is particularly true with respect to the intake bonnets which form arches as viewed in Figure 1, the combined effect of the intake and exhaust bonnets providing a truss-like structure spanning the tops of the cylinder heads and the top of the water jacket and securing the tops of the cylinders together. This also rigidifies and strengthens the water jacket which derives its primary support at the top and also provides a solid support for the upper valve casing 17 mounted on the top of the jacket.

Following the fabrication and brazing of the engine block assembly, it is preferable first to machine the bottom face of the base plate, by surface grinding or the like, in order that this face may be used as a reference plane from which dimensions may be established in later machining operations. If the cylinder heads are not spaced uniformly from the lower surface of the base plate, the pistons will travel to different levels within the cylinders and the gases within the cylinders will not be compressed uniformly, from cylinder to cylinder; this may cause uneven power delivery, and also cause vibration. In the present construction the individual cylinder tubes may be cut substantially to finish length from tube stock without regard to precise dimensions in the cut-off operation. However, the desired exact spacing of the cylinder heads from the base plate surface is obtained by providing

shoulders through counterturning or counterboring to limit the engagement of the cylinder tubes with the base plate, and the engagement of the cylinder heads with the cylinder tubes. These shoulders, as shown in the drawings, may readily be spaced apart from one another precisely and uniformly. In this manner the need for great care in assembling operations is eliminated inasmuch as it is convenient to bring the parts together until the shoulders are engaged.

The cylinders, valve seats, valve stem guides and upper valve guide sleeves are formed of machine steel. After being brazed, these parts are rigidly integrated in the assembly and their relationship with each other is fixed. The rigidity of the structure compares very favorably with a cast cylinder block of similar proportions. Therefore, these parts which require to be finished accurately as to diameter and which require proper alignment with each other, are machine finished in assembly, the valve guides and seats being line reamed and ground according to standard practices. The cylinders likewise are machine finished to close dimensional tolerances according to the standard commercial practice such as by grinding and lapping. The cylinder block therefore is accurately finished to provide the required running fits for the moving parts of the machine. An advantage over cast engine block construction lies in the fact that the cylinders and guides are formed from selected alloy steels best adapted to the particular usage and free of impurities and imperfections frequently encountered in castings, and present hardened wear resistant surfaces.

The thin-walled steel cylinder barrel, having its lower end pressure fitted into the base plate and its upper end closed by a thin wall stamped steel cylinder head, pressure fitted thereon, constitutes a primary structural element of the engine upon which is directly imposed the maximum combustion pressures developed in engine operation.

Attempts in the past to directly and permanently braze the heads to the cylinders and eliminate the use of gaskets have resulted in failures due to weakness in the joint, at time permitting the head to blow off under maximum cylinder pressures.

To remedy this situation, designers have resorted to the expedient of attaching the heads by spot-welding or screw threading them on the cylinders, then sealing the joint by brazing. This proved to be unsatisfactory because the seal tends to be interrupted circumferentially due to the spot welds, and in the instance of the threaded engagement, by the irregular brazing surface presented by the screw threads. Furthermore, the screw threaded construction results in a relatively heavy metal section where the screw threaded flange of the head overlies the top of the cylinder, thus impeding the flow of heat from the combustion chamber.

In the present instance the head and base plate are directly joined to the cylinder barrel either by a shrinkage fit or by a heavy press fit. If by shrinkage fit a temperature differential is employed either by lowering the temperature of the barrel to contract it, or by raising the temperature of the head and base plate to expand them. An appropriate differential between the dimensions of the mating parts develops a relatively high pressure between them upon assembly, binding the parts firmly together when permitted to reach normal temperatures.

When the parts are joined by a press fit a metal-to-metal interference is created, the shouldered opposite end portions of the barrel being approximately .001" larger than the mating inside diameters of the head and base plate openings. The parts are pressed together under high pressure to join the head and base plate firmly to the cylinder barrel.

After pressure fitting of the parts, the cylinder assembly is brazed by the application of a brazing wire about the barrel respectively at the juncture of the head and base plate. Although the joints are pressure fitted, the brazing material, upon fusing, penetrates between the adjoining pressure gripped surfaces of the joint in the form of a minutely thin film. It has been observed upon examination that this film extends for the full length and circumference of the joints, permanently uniting the parts, sealing the joints and integrating the structure. It will be apparent the use of gaskets between the cylinder head is eliminated.

As shown in broken lines on Figure 6, the upper limit of piston travel, which defines the combustion chamber, is in the area of the pressure fitted flange of the cylinder head, at the top of the cylinder. It will be apparent, therefore, that during operation, the flow of heat from the combustion chamber will tend to raise the temperature of the cylinder above that of the head flange, the cylinder being exposed to the burning gases in the combustion chamber while the flange of the head is exposed exteriorly to the coolant in the water jacket. This temperature differential therefore tends to expand the cylinder with respect to the head tending to increase the gripping pressure of the brazed joint.

After having been brazed, the interior surface of the cylinder barrel is machined truly circular and finished to receive the piston and provide a seal with the piston rings. The wall thickness of the cylinder barrel, after machining, is at least $\frac{1}{16}$" at all points but need not be in excess of $\frac{3}{32}$".

The exterior surface of the upper portion of the cylinder barrel and cylinder head, in which the maximum combustion temperatures are developed, are directly exposed to the coolant in the water jacket. These parts, being of thin walled construction, cause an exceedingly rapid dissipation of heat in this critical area, whereby the efficiency and potential output of the engine is materially increased.

Having described my invention, I claim:

1. A cylinder block for an internal combustion engine comprising a series of seamless metal tubes, the axes of which are disposed parallel to one another and in the same plane, a metal plate adapted to be attached to a crankcase, said metal plate being apertured so that the lower end of each cylinder tube is disposed in an aperture in said plate, closures for the tops of said tubes, and intake and exhaust manifolds fabricated from sheet metal, said manifolds connecting and cross bracing each cylinder and a sheet metal member connecting said manifolds at their tops to form a truss-like structure which secures said tubular cylinders together at their upper ends.

2. In an internal combustion engine, the combination of a cylinder block and a crankcase, the cylinder block comprising a plurality of hardenable alloy steel tubes constituting the cylinders, the tubes held together at their upper ends by sheet metal intake and exhaust manifolds, their lower ends held together by a thin sheet metal

plate having apertures into which the respective ends of the cylinders are press-fitted and brazed, the crankcase consisting of an aluminum casting having transverse webs extending from side to side; one web on each side of each cylinder with bearings disposed in the webs and a series of bolts, two passing from the lower halves of each crankshaft bearing through the webs and through the plate which holds the tubular cylinder in assembly at their lower ends, thus, connecting the cylinder block and crankcase and providing four bolts about the periphery of each cylinder, directly attaching the bearings on each side of the cylinder directly to it, to contain the explosive pressure of each cylinder individually as it fires.

3. In an internal combustion engine, a cylinder block unit providing cylinders, a rigid plate supporting the lower ends of the cylinders and having for this purpose apertures therein in which the lower ends of the cylinders are secured, said block unit further including gas intake and discharge conduits fixed to the tops of the cylinders, a water jacket surrounding the cylinders and conduits and including a top wall, and a valve guide unit secured along and upon said wall, said valve guide unit being of rectangular casing form and including valve guide sleeves and cross ribs.

4. In an internal combustion engine, a cylinder block unit including cylinders, a web of metal thickness greater than that of the cylinder walls, including apertures in which the lower ends of the cylinders are engaged, a reenforcing structure disposed along the top of the row of cylinders, said structure being rigid and incorporating valve guides and manifolds in cross-arched relationship with the respective cylinders, the upper structure constituting a structural beam stiffening the cylinder block and maintaining the cylinders against displacement.

5. A cylinder block and crank case assembly for an internal combustion engine comprising: a plurality of cylinder tubes, a base plate the lower end of each of said tubes respectively secured to the base plate, and the upper ends of the tubes respectively having individual cylinder heads secured thereon, a longitudinally trussed, box-like unit disposed at the tops of the cylinder tubes, said unit providing a valve casing for housing the valve actuating mechanism, the cylinder heads being united to said valve casing by a plurality of valve bonnets extending between the cylinder heads and the valve casing; an independent, longitudinally trussed box-like unit disposed at the bottoms of the cylinders beneath said base plate and forming a crankcase including longitudinal reinforcing ribs formed on the top portion thereof and transverse reinforcing ribs, the base plate being mounted upon and secured to the crankcase.

6. A cylinder block and crankcase assembly for an internal combustion engine comprising: a pair of upper and lower spaced parallel trussed units and a plurality of individual cylinder tubes disposed laterally therebetween, each of said cylinder tubes having an individual cylinder head secured upon its upper end, a base plate common to the lower ends of the cylinder tubes the upper of said trussed units providing a valve casing for housing valve actuating mechanism, said cylinder heads being united to said valve casing, the lower of said trussed units providing a crankcase for the engine and having longitudinal reinforcing ribs formed on the top portion thereof and transverse reinforcing ribs, the crankcase being secured to said cylinder block base plate by means of bolts engaged in said transverse ribs.

7. A cylinder block assembly comprising: a series of drawn cylinder tubes, a sheet metal base plate, said base plate being apertured and having the lower end of each cylinder tube pressed in respective aperture, thereof, a plurality of sheet metal closures for the tops of said tubes, said closures being pressed on the respective tubes and including respective intake and exhaust ports, and sheet metal intake and exhaust bonnets, said bonnets being pressed into said ports respectively, said cylinder tubes, base plate, closures, and bonnets being brazed together.

8. In an internal combustion engine, a plate in the form of a sheet like member having a plurality of bores in a line, a plurality of thin-walled seamless metal cylinder tubes having the respective endwise portions thereof press fitted into the bores of the plate and brazed thereto, the areas in brazed contact between the cylinders and the plate bores being of such extent that the brazing material is capable of resisting the shearing actions exerted thereon during engine operation.

9. A cylinder block construction comprising, a flat sheet of metal of substantial thickness forming a base plate having a series of aligned apertures therein, seamless thin wall metal tubes, forming cylinders, having endwise portions thereof press-fitted and brazed in said apertures so as to project laterally from said base plate in substantial parallel relationship to one another, cylinder heads press-fitted and brazed to the opposite ends of said cylinder tubes, and sheet metal conduit members in the form of arches rigidly connecting the heads of adjacent cylinders one to another, whereby each cylinder supports each adjacent cylinder against independent movement.

10. A block for an internal combustion engine, comprising a plurality of thin wall, seamless metal tubes constituting cylinders, heads attached to the tops of said cylinders, intake conduits in the form of arches spanning adjacent cylinders and connected to the heads thereof, and exhaust conduits in the form of right angle elements disposed laterally with respect to said arches, one for each cylinder and extending from the head thereof, the said arched intake conduits having lateral nipples extending substantially parallel with said exhaust manifolds, the free ends of said exhaust manifolds and nipples being connected in common to a rigid plate, and a base plate which is common to the lower ends of said cylinder tubes and which is rigidly fastened thereto.

11. In an engine block for an internal combustion engine, at least a pair of cylinder tubes of seamless thin wall metal, a plate interconnecting the exterior peripheries of said tubes at one end thereof, said tubes having heads at the opposite ends thereof, an arch shaped conduit having its endwise portions respectively connected to said heads, and conduits in the form of elbows extending from said heads adjacent said arch conduit in directions lateral to said arch conduit.

12. In an engine block for internal combustion engines, at least a pair of cylinder tubes of seamless thin wall metal, a plate interconnecting the exterior peripheries of said tubes at one end thereof, said tubes having heads at the opposite ends thereof, an arch shaped conduit having its endwise portions respectively connected to said heads, and conduits in the form of elbows ex-

tending from said heads adjacent said arch conduit in directions lateral to said arch conduit, said elbows and said arch conduit having projections respectively aligned with said cylinders forming valve guide seats.

13. An engine block for internal combustion engines, comprising at least a pair of cylinder tubes of seamless thin wall metal, a plate interconnecting the exterior peripheries of said tubes at one end thereof, said tubes having heads at the opposite ends thereof, an arch shaped conduit having its endwise portions respectively connected to said heads, conduits in the form of elbows extending from said heads, adjacent said arch conduit, in directions lateral to said arch conduit, said elbows and said arch conduit having projections respectively aligned with said cylinders and forming valve guide seats, and a box above said cylinder heads adapted to contain valve actuating mechanism, said box having a bottom wall fastened to said projections.

14. A construction for an engine block fabricated from sheet metal, which comprises a plate of substantial thickness having an aperture therein, a cylinder having a counterturned portion defining a shoulder at one end thereof, the said counterturned portion being adapted to form a press fit with said aperture, and the said shoulder being spaced from the end of said cylinder a distance corresponding substantially to the thickness of said plate for engagement with the surface of said plate, and a cylinder head for the opposite end of said cylinder, the said cylinder end and head being configurated relative to one another to present a second shoulder spaced from the first shoulder a predetermined distance whereby the combustion space within the cylinder, by spacing of said shoulders, is fixed at a predetermined distance from the lower face of said plate.

15. A cylinder block for an internal combustion engine, comprising an assembly of thin wall metal elements, including seamless tubes, constituting cylinders, stamped sheet metal heads and a sheet metal base plate having apertures therein in spaced alignment for receiving endwise portions of the cylinder tubes in press-fitted relationship, the cylinder heads and the cylinder tubes having respective machined surfaces forming press fits one with another, arch-shaped conduits constituting intake passageways rigidly joining the heads of adjacent cylinders, and elbow-shaped conduits forming exhaust passageways extending laterally in respect to said arch-shaped intake conduits, said intake conduits having sidewise openings, a rigid manifold plate to which the free ends of said elbow-shaped conduits are connected, and means for connecting the sidewise openings in said arch conduits to said manifold intermediate the elbow-shaped conduits.

16. The combination, in an internal combustion engine, of a cylinder tube, a cylinder head having a spark plug aperture, a water jacket surrounding the cylinder tube, projecting above the cylinder head and having an inwardly flanged aperture aligned with said spark plug aperture in the head, and a thin wall bushing, threaded internally to receive a spark plug, said bushing being disposed within said aligned apertures having lateral flanges at its endwise portions respectively engaging the interior surface of said head and the exterior surface of said water jacket, said water jacket being spaced from said head by means of said inturned flange.

17. The combination of a cylinder head having a spark plug aperture, a water jacket surrounding the head in spaced relationship thereto, said water jacket having an aperture aligned with the aperture in said head, and a bushing disposed within said aligned apertures, said bushing being a thin wall member threaded internally to receive a spark plug and having lateral flanges at its opposite ends respectively engaging the interior surface of said head and the exterior surface of said water jacket, said water jacket, bushing and head being brazed together in fluid and pressure-tight connection with one another.

18. In an internal combustion engine, a plate in the form of a sheet like member having a plurality of bores in a line, a plurality of thin-walled seamless metal cylinder tubes having the respective endwise portions thereof press fitted into the bores of the plate and brazed thereto, the areas in brazed contact between the cylinders and the plate bores being of such extent that the brazing material is capable of resisting the shearing actions exerted thereon during engine operation, the bottom face of the plate of smooth planar reference surface and the inner surfaces of the cylinders being true and at right angles thereto, and means including a truss-like upper structure for holding said cylinders to said plate as they are fired.

PAUL KLOTSCH.

REFERENCES CITED

The following references are of record in the file of this patent:

UNITED STATES PATENTS

Number	Name	Date
853,288	Weidely	May 14, 1907
1,113,124	Jacobs et al.	Oct. 6, 1914
1,260,859	Bie	Mar. 26, 1918
1,270,044	Murray	June 18, 1918
1,286,667	Leipert	Dec. 3, 1918
1,287,359	Leipert	Dec. 10, 1918
1,299,709	Hall	Apr. 8, 1919
1,467,251	Roos	Sept. 4, 1923
1,529,812	Reineke	Mar. 17, 1925
1,635,023	Angle	July 5, 1925
1,639,648	Carrey	Aug. 23, 1927
1,652,333	Vincent	Dec. 13, 1927
1,775,852	Fisher	Sept. 16, 1930
1,972,752	Balough	Sept. 4, 1934
2,001,854	Shoemaker	May 21, 1935
2,054,926	Caminez	Sept. 22, 1936
2,064,461	Chilton	Dec. 15, 1936
2,089,277	Loeffler	Aug. 10, 1937
2,147,186	Alfaro	Feb. 14, 1939
2,199,423	Taylor	May 7, 1940
2,275,478	Taylor	Mar. 10, 1942
2,287,399	Ware et al.	June 23, 1942
2,337,577	Taylor	Dec. 28, 1943
2,444,963	Taylor	July 13, 1948

July 3, 1951 C. E. LEJA 2,559,079

ENGINE

Filed Oct. 15, 1947

Fig. 1

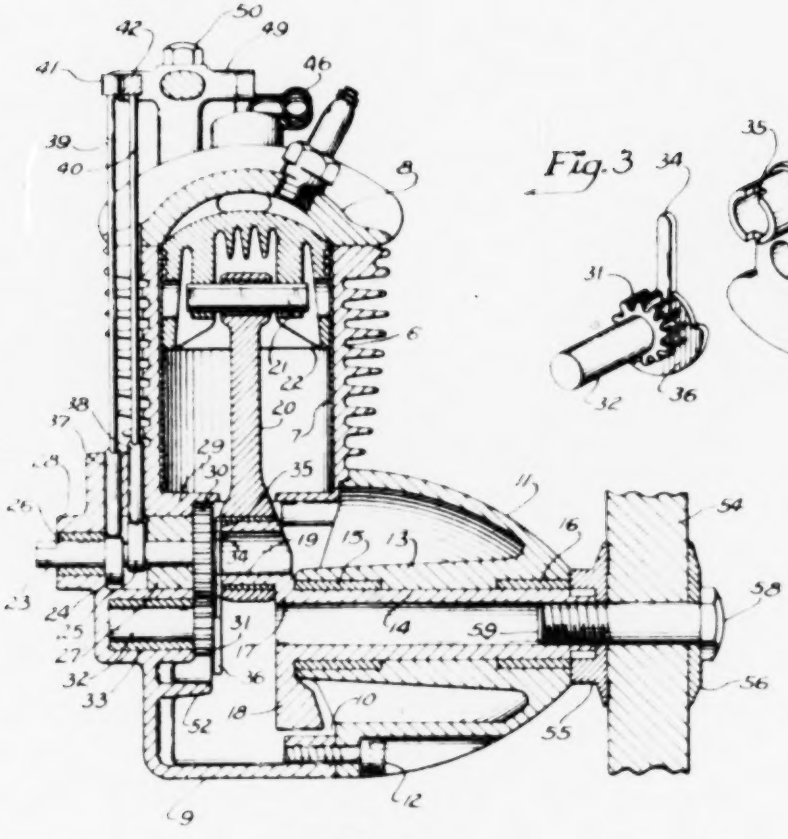

Fig. 2

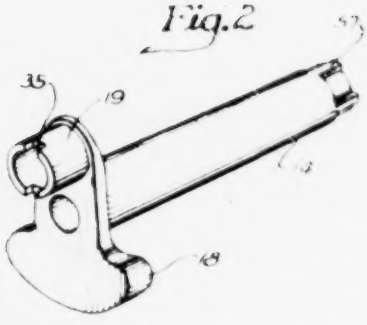

Fig. 3

Fig. 4

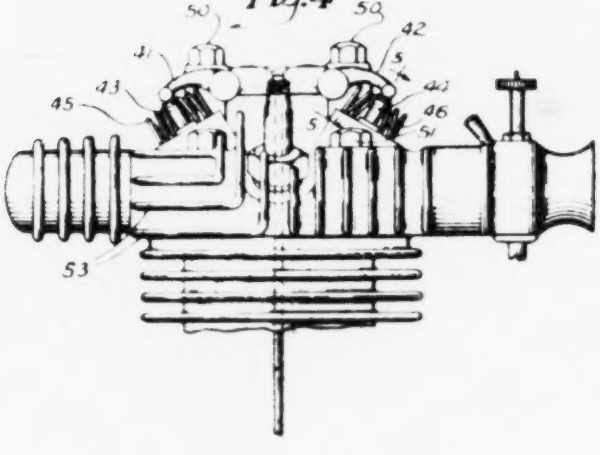

Fig. 5

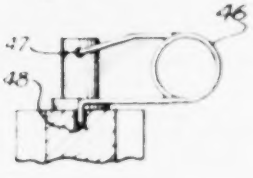

INVENTOR.
Casimir E. Leja

BY
Glenn & Noble
Attys.

Patented July 3, 1951 2,559,079

UNITED STATES PATENT OFFICE

2,559,079

ENGINE

Casimir E. Leja, Chicago, Ill.

Application October 15, 1947, Serial No. 780,049

4 Claims. (Cl. 123—84)

1

This invention relates to internal combustion engines and is particularly directed to small engines of this type which are adapted for various uses and particularly for aviation and racing cars or models.

The principal object of the invention is to provide an improved engine of this type which will be simple in construction, easily started and durable and efficient in operation.

Other objects are to provide an improved engine housing; to provide a simplified crankshaft and improved camshaft drive; to provide an improved mounting for a propeller or fly wheel; to provide novel valve springs; and to provide such other improvements in construction and operation as will appear more fully from the following description.

In the accompanying drawing illustrating this invention,

Fig. 1 is a longitudinal sectional view with parts broken away or omitted for convenience in illustration;

Fig. 2 is a perspective view of the crankshaft;

Fig. 3 is a perspective view of the camshaft and driving mechanism;

Fig. 4 is a front view as taken from the right hand side of Fig. 1 particularly showing the improved cooling fins; and

Fig. 5 is a detail of the valve spring mounting.

As shown in these drawings, 6 is the cylinder which is preferably provided with a steel lining 7 and cylinder head 8. The crankcase 9 is cast integrally with the cylinder and has an opening 10 which is concentric with the shaft and which is covered by a housing 11 secured thereto by means of cap screws 12 as shown. The housing 11 is of somewhat oval or egg-shape and is provided with an inwardly extending elongated bearing 13 for the tubular crankshaft 14. Bushings 15 and 16 are pressed into the ends of the bearing member 13 for engagement with the crankshaft. The crank arm 17 has a counter weight 18 at one end and a tubular crank pin 19 at the opposite end. The crank pin is engaged by one end of the connecting rod 20. The opposite end of the connecting rod engages with the wrist pin 21 of the piston 22.

The camshaft 23 is formed integrally with the cams 24 and 25 and is held in place by split bearings 26 and 27 which are first assembled on the camshaft and then pressed into bosses 28 and 29 provided in the crankcase for receiving the same.

The camshaft 23 has a gear 30 secured to its inner end which meshes with a pinion gear 31

2

formed integrally with a stub shaft 32 which is mounted in a bearing 33 in alignment with the axis of the shaft 13. The stub shaft 32 has a radially extending arm 34 which is also preferably formed integrally with the gear 31 and engages with a slot 35 in the end of the crank pin 19 as shown in Figs. 2 and 3. The arm 34 has a counter weight 36. By means of this gearing arrangement, the camshaft will be driven at the proper speed and it will be particularly noted that the pinion 31 will remain in the crankcase and the proper timing will be maintained when the crank pin engages with the arm 34. This arrangement provides for the convenient removal of the crank and again assembling the same without disturbing the valve timing.

The cams 24 and 25 engage respectively with cam followers 37 and 38 which actuate the push rods 39 and 40 for operating the rocker arms 41 and 42 which coact with the valve stems 43 and 44 in the usual manner.

The valve stems are raised by springs 45 and 46, the particular construction and arrangement of which constitutes one of the important features of the present invention. These springs are of the hairpin type with their central portions extending through holes 47 in the ends of the valve stems. The coil portions of the springs are positioned on either side of the valve stem and their terminal portions 48 engage with holes in the upper surface of the cylinder head as shown in Fig. 5. The downwardly projecting portions 48 are of sufficient length so that the ends thereof bear against the bottoms of the holes and provide the only points of contact between the springs and the cylinder head. The arrangement is such that the bearing portions of the springs will be in alignment with the center line of the valve stems and thus tend to prevent any lateral pressure on the upper portions of such stems when the valves are operated.

This type of floating spring has a higher period of vibration or oscillation than an ordinary coiled spring and does not tend to surge as readily as such springs. The rocker arms are pivotally mounted in a housing or bracket 49 which is secured by means of two studs 50 which studs also serve to fasten the cylinder head to the cylinder. The cylinder head is further fastened by two similar shorter studs 51. This arrangement adds to the saving in weight and simplicity of construction.

A substantially circular guard or protector 52 which is concentric with the axis of the crankshaft is cast at the rear of the crankcase and ex-

tends inwardly over the camshaft gears. This guard prevents damage to the connecting rod when the propeller or fly wheel is removed and the engine is cranked, or also in the event of certain kinds of accidents or "crack-ups."

Some of the cylinder head cooling fins such as shown at 53 are arranged to curve from a horizontal plane to a vertical plane, thereby giving more fin area on the exhaust side of the cylinder head as shown in Fig. 4. This particular arrangement adds greatly in maintaining the proper temperature of the engine for giving the highest efficiency.

The driven member 54 which may be a propeller, fly wheel, pulley, or the like, is mounted between two discs 55 and 56. The disc 55 is secured to the shaft 14 preferably by means of splines or projections 57 which fit in corresponding grooves in the hub of the disc. A cap screw or bolt 58 extends through the discs and driven member and is threaded to engage with the corresponding threads 59 in the end of the crankshaft 14. This permits an easy and convenient mounting of the propeller, or the like, and in the event of damage, there is little possibility of injury to the crankshaft.

From this description, it will be seen that I provide an engine in which the crankshaft housing is such that it provides for ease of assembly in production, and furthermore increases the capacity of the crankcase. This lowers the crankcase compression and results in cleaner and more efficient running. The construction whereby the crankcase and cylinder are cast together with necessary bosses or projections or various operating parts further enhances the simplicity of construction and economy in the manufacture of the engine as well as improvement in the operation of the same.

It will be noted that the engine may be provided with any desired form of ignition and other coacting devices such as fuel supply, and the like, in order to make an operative structure, but such parts have not been described as they form no part of the invention except as instrumentalities used in the operation of the same.

It will also be noted that changes may be made in the details of construction or arrangement of the parts without departing from the spirit and scope of the invention, and therefore I do not wish to be limited to the particular construction shown and described except as set forth in the following claims in which I claim:

1. In an internal combustion engine, the combination of a cylinder, a crankcase, a crankcase housing extending outwardly from the crankcase and forming an extension therefor and having a bearing extending into the crankcase, a crankshaft mounted in said bearing, a piston in said cylinder, a piston rod connecting the piston with the crank, said crankshaft having its crank pin extending a short distance only through the piston rod and having a transverse slot therein, a stub shaft mounted in the crankcase in alignment with the crankshaft, a pinion on the stub shaft adjacent to the crank pin, an arm extending radially from the stub shaft and engaging with the slot in the crank pin, a camshaft mounted adjacent to the stub shaft and a gear on the camshaft engaging with the pinion on the stub shaft, the arrangement being such that the stub shaft and pinion may remain in the crankcase when the crankshaft is removed and the timing will be maintained when the crankshaft is inserted with the slot in the crank pin engaging with said arm.

2. Valve actuating means for an internal combustion four-cycle engine having a crankcase which is closed at one end, a bearing extending inwardly from the closed end and open to the crankcase, a stub shaft mounted in the bearing and extending into the case, a gearing on the inner end of the stub shaft formed integrally therewith, an arm formed integrally with the gear and extending at right angles thereto, the crankcase having an opening opposite the closed end, a housing covering said opening, a crankshaft bearing in the housing, a crankshaft mounted in said bearing and having a crank pin with a transverse slot in the end thereof which is engaged by said arm, a removable bearing in the closed end adjacent to the stub shaft bearing, a camshaft mounted in said bearing and extending into the crankcase, a gear on said camshaft which meshes with the first named gear, and cams formed integrally with the camshaft which are also positioned in the crankcase.

3. An engine having a crankcase which is closed at one end, a bearing in the closed end which opens into the crankcase, a stub shaft mounted in said bearing and extending into the case, a gearing carried by the stub shaft, an arm on the gearing extending radially therefrom, the crankcase having an opening opposite the closed end which is sufficiently large to permit the insertion of the stub shaft with the parts mounted thereon into position through said opening, a housing for said opening, a crankshaft bearing in the housing, a crankshaft mounted in the bearing and having a crank pin with a transverse slot in the end thereof which is engaged by said arm for turning the stub shaft, the arrangement being such that the stub shaft and parts connected therewith may be readily inserted through the opening and the housing with the crankshaft therein may be assembled to bring the arm in engagement with the crank pin.

4. An engine having a crankcase closed at one end, a bearing in the closed end, a stub shaft mounted in the bearing and extending into the case, a gear carried by said stub shaft, an arm extending radially from said gear, a bearing in the closed end adjacent to the bearing for the stub shaft, a cam shaft mounted in said bearing and extending into the crankcase, a gear on said cam shaft which meshes with the first named gear, and a substantially circular guard projecting from the crankcase wall and extending inwardly over said gears, substantially as described.

CASIMIR E. LEJA.

REFERENCES CITED

The following references are of record in the file of this patent:

UNITED STATES PATENTS

Number	Name	Date
615,766	Vansickle	Dec. 13, 1898
815,779	Bailleul	Mar. 20, 1906
872,571	Moser	Dec. 3, 1907
1,422,729	Waterhouse	July 11, 1922
1,447,245	Gore	Mar. 6, 1923
1,974,802	Chilton	Sept. 25, 1934
2,085,976	Heintz	July 6, 1937
2,252,600	May	Aug. 12, 1941
2,419,274	McDowall et al.	Apr. 22, 1947

Oct. 2, 1951 G. H DINGMAN 2,563,461

MAGNETO

Original Filed May 23, 1946 3 Sheets-Sheet 1

Fig. 1.

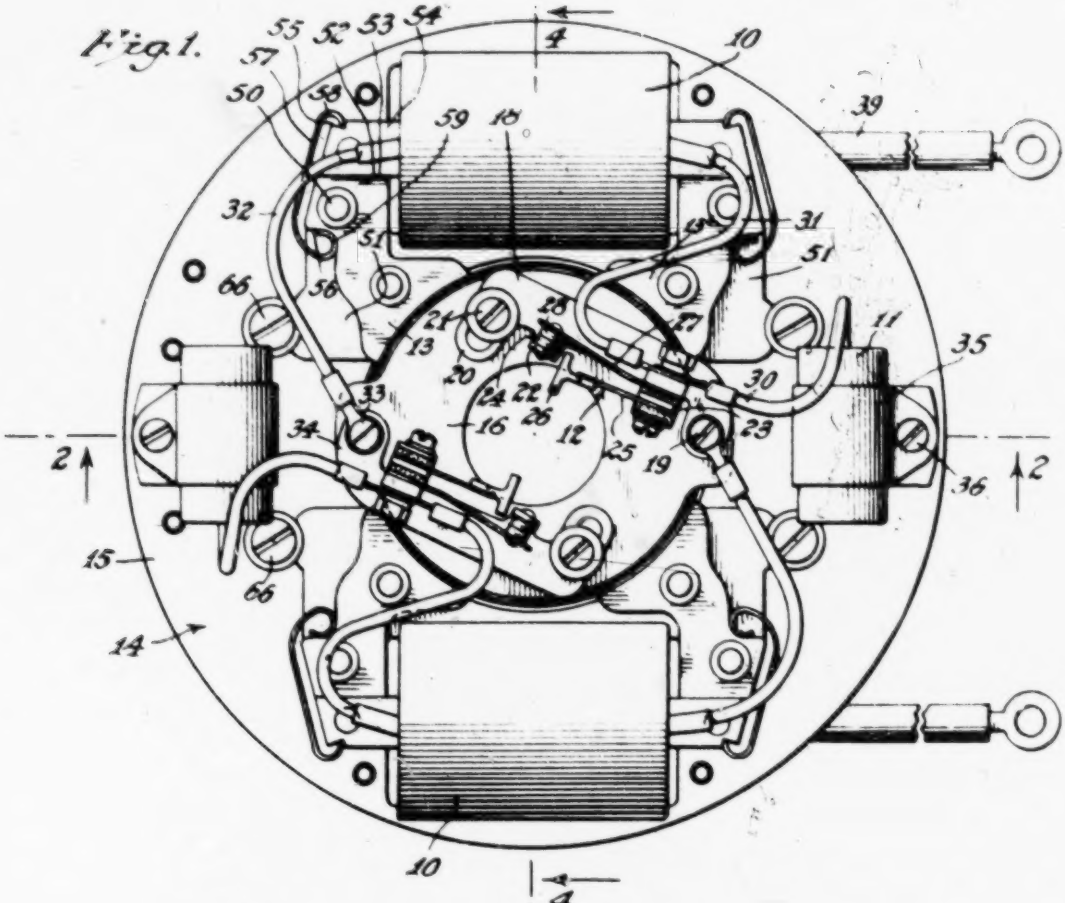

Fig. 2.

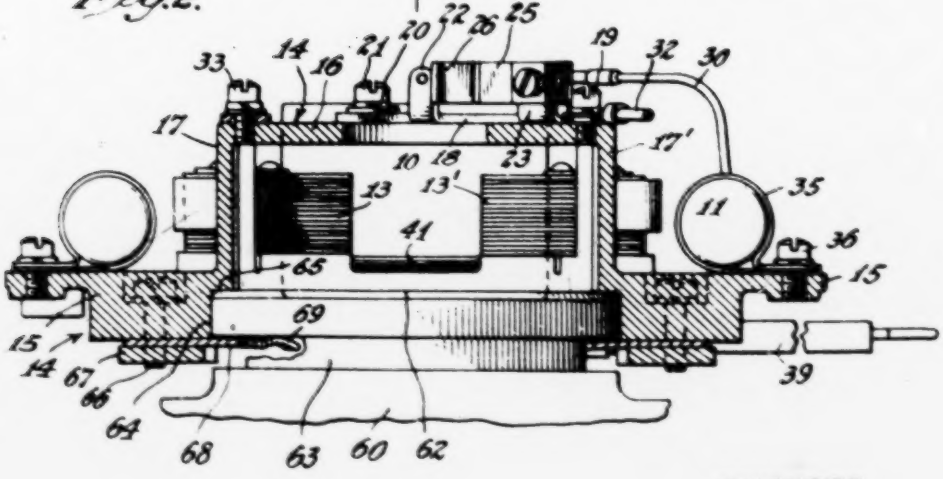

INVENTOR
Glen H. Dingman
BY
Dale A. Bauer
ATTORNEY

Oct. 2, 1951 G. H. DINGMAN 2,569,461

MAGNETO

Original Filed May 23, 1946 3 Sheets-Sheet 2

Fig. 3.

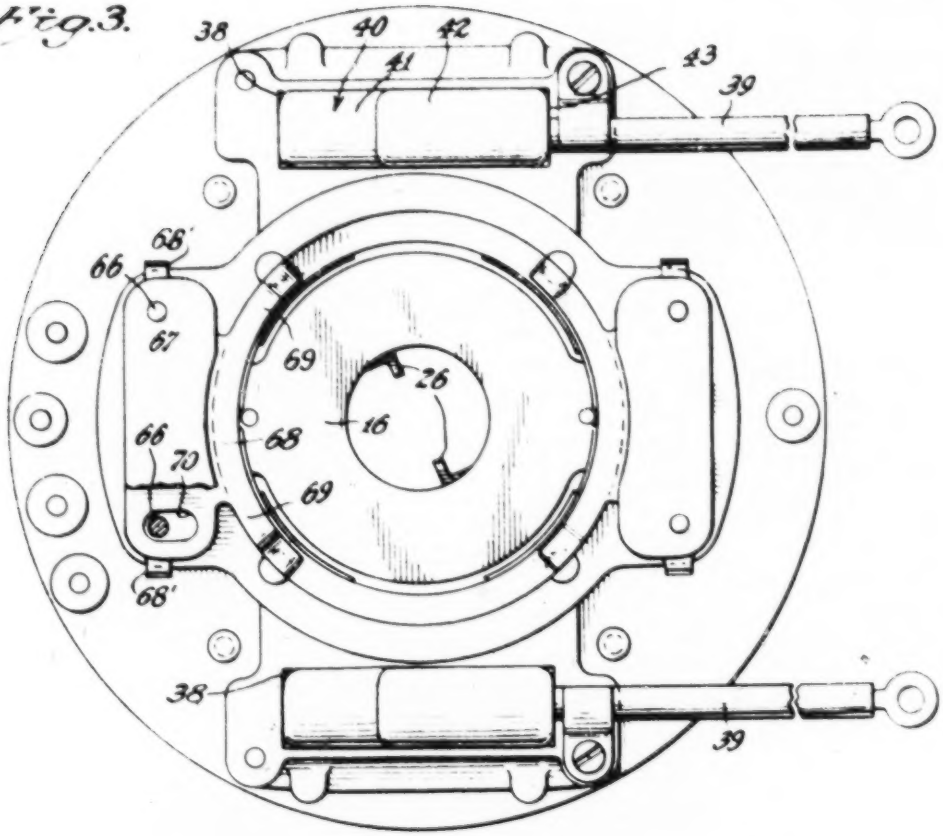

Fig. 4.

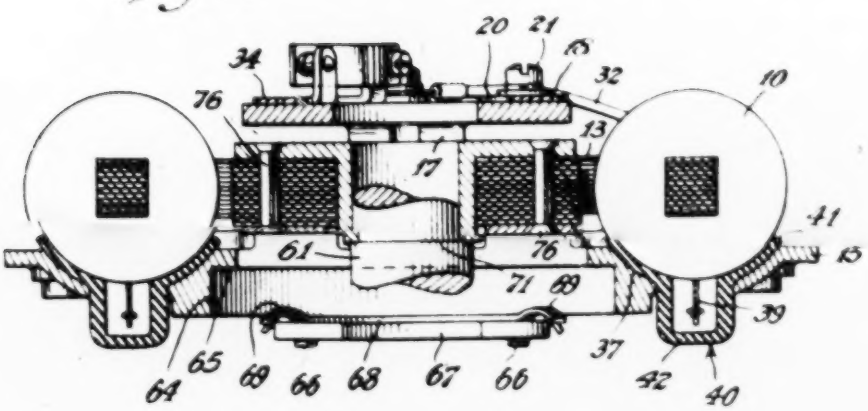

INVENTOR
Glen H. Dingman
BY
Dale A. Bauer
ATTORNEY

Oct. 2, 1951 G. H. DINGMAN 2,569,461

MAGNETO

Original Filed May 23, 1946 3 Sheets-Sheet 3

Fig.5.

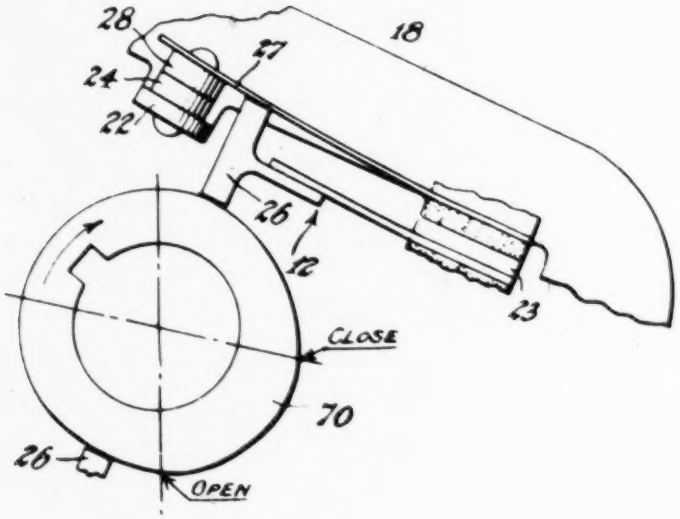

Fig.6.

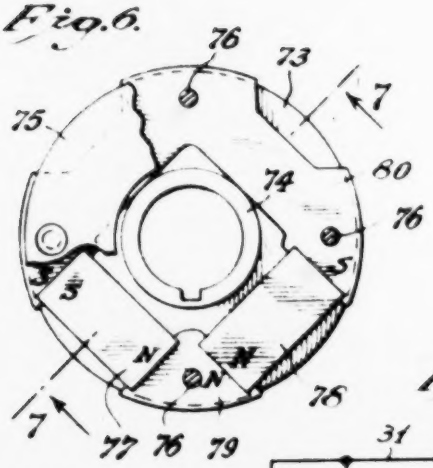

Fig.8.

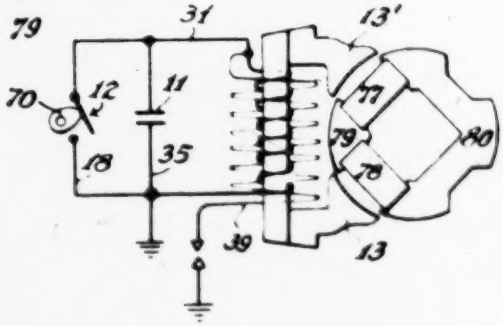

Fig.7.

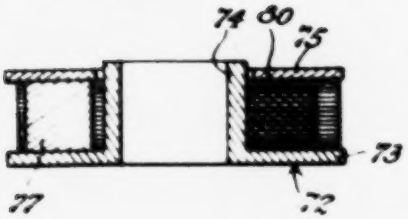

INVENTOR
Glen H. Dingman
BY
Dale A. Bauer
ATTORNEY

Patented Oct. 2, 1951 2,569,461

UNITED STATES PATENT OFFICE

2,569,461

MAGNETO

Glen H. Dingman, Sidney, N. Y., assignor to Bendix Aviation Corporation, New York, N. Y., a corporation of Delaware

Original application May 23, 1946, Serial No. 671,695. Divided and this application February 9, 1950, Serial No. 143,283

12 Claims. (Cl. 171—209)

1

This invention relates to magnetos and more particularly to the mechanical construction thereof and the mounting thereof on an engine casing or the like.

This application is a division of applicant's copending application Ser. No. 671,695 filed May 23, 1946, for Magneto.

One of the objects of the present invention is to provide a mounting for the parts of a magneto adapted to make the assembly of parts easy and efficient.

Another object of the invention is to provide novel means for mounting a magneto stator on an engine casing or the like whereby the magneto may be readily installed or removed from the casing and whereby adjustment of the magneto relative to the casing is greatly facilitated.

The above and further objects and novel features of the invention will more fully appear from the following detailed description when the same is read in connection with the accompanying drawings. It is to be expressly understood, however, that the drawings are for the purpose of illustration only and are not intended as a definition of the limits of the invention.

In the drawings, wherein like reference characters refer to like parts throughout the several views,

Fig. 1 is a plan view of a flywheel or crankshaft type of magneto with the cam and shaft, and the rotor omitted;

Fig. 2 is a sectional view of the magneto stator taken on the line 2—2 of Fig. 1;

Fig. 3 is a bottom plan view of the structure shown in Fig. 1;

Fig. 4 is a section on the line 4—4 of Fig. 1;

Fig. 5 is a schematic detail plan view showing the cam and its operative relation to the breaker points located at diametrically opposite positions;

Fig. 6 is a bottom plan view of the rotor broken away to show concealed parts;

Fig. 7 is a section of same on the line 7—7 of Fig. 6; and

Fig. 8 is a diagram of the circuits.

Referring to the numerals of the drawings, and particularly to Fig. 1, a magneto transformer is indicated by the numeral 10, its associated condenser by the numeral 11, its associated circuit breaker by the numeral 12, and its stator pole shoes by the numerals 13, 13'. These operative parts of the magneto are duplicated, but the initial description will be limited to them since the operation of the duplicates is identical, occurring, in the construction shown, 180° later.

The frame 14 of the magneto comprises a casting, which may be of aluminum or any other satisfactory metal or material of sufficient strength and the requisite conductivity, having coaxial annuli 15, 16 of which the smaller has outer dimensions approximating the inner dimensions of the larger and is supported therefrom by integral flat posts 17, 17'.

2

The smaller annulus 16 carries a metal arm 18 pivotally attached thereto by a screw 19 and having a slotted end 20 through which a set screw 21 passes, giving adjustability to the position of the arm and the breaker elements mounted thereupon. Two metal ears 22, 23 project upwardly from the body of the arm 18, the first of which serves as a support for breaker point 24 and the second of which serves as a support for spring 25 which carries on its end a T-shaped dielectric cam follower 26. The cam follower rides upon the cam carried by the shaft and is displaced by the lobe of the cam toward the spring breaker arm 27, which carries at its end a breaker point 28 which is normally in contact with breaker point 24, acting under the impulse provided by the cam to break the circuit through the points in the manner which will be understood by persons skilled in the art. The breaker arm 27 is electrically connected to the terminal of a cable 30 of the condenser 11 and to the terminal of a cable 31 that issues from the coil 10. The coil is grounded through the cable 32 affixed at its terminal to the screw 33 that attaches the supporting arm 34 of the other breaker to the frame or support 14. The condenser 11 is grounded and fastened to the frame by a strap 35 which encircles it and has its ends affixed to the plate 15 by a screw 36.

A mounting for the coil 10 is provided. As will be understood by persons skilled in the art, the coil has three leads, one to the primary, one to the secondary, and a joint lead to the ground. One of these leads is brought out, in the coil being described, through the circular wall of the coil and poses a problem of protection which has been cared for in a novel manner. A depressed and apertured seat 37 is provided, the curvature of which conforms to that of the coil. The depressed seat has two halves that are separated by an aperture or slot 38 that is seen from the bottom in Fig. 3. The shape of the seat provides end abutments which act to retain the coil against endwise displacement. A high tension lead 39 projects from the wall of the coil and is received in the aperture in the seat.

In order that the lead and the coil itself may be protected against damage from the metal of

the frame, from vibration, and from shock, a protective pad 40 is provided. That pad is preferably made from a flexible dielectric substance such as rubber having a flat or curved bed 41 that overlies the coil and conforms to the shape of the seat. A channel-shaped, depressed portion 42, having width about equal to the width of the aperture in the seat and length and depth sufficient to enclose the lead 39 is provided. An opening 43 is provided in the end of the channel-shaped portion 42, beneath the plate 15 through which the high tension lead is passed. The hole in the protective pad may be made to conform snugly to the lead so that vibration of the lead will not harmfully affect the connection to the coil.

The core of the coil is connected to the stator shoes of the magneto. Laminated stator shoes 13, 13' are bolted to the plate 15 by bolts such as 50 in such position that the curved portions thereof are in operative relation to the rotor of the magneto. Raised lands 51, formed integrally with the plate 15, serve to support the stator shoes. The shoes have flat ends 52 adapted to receive the flat sides 53 of the core 54 of the coil 10. Sharp notches 55 are provided in the upper ends of the core 54 and rounded notches 56 are provided in the sides of the stator shoes. Spring clamps 57 having sharp ends 58 and rounded ends 59 are adapted to clamp the ends of the core to the stator shoes in firm electrical connection while at the same time they maintain the coil in its seat in the plate 15. The rounded ends of the clamps are easily sprung into and out of position, but when in place form a firm connection that does not become accidentally disengaged.

The apparatus hereinabove described forms an interdependent novel combination with the casing 60 (Fig. 2) of the engine or other apparatus from which the drive shaft 61 (Fig. 4) projects. The machine or engine casing 60 has an annular flat top or end 62 and a groove 63 in the wall beneath the top thereby forming a pilot flange. The frame 14 is internally provided with a groove or recess 64, the upper face or end wall 65 of which serves as a shoulder to rest upon or against the end or outer radial wall 62 of the pilot flange of the casing. The annular or cylindrical wall of groove 64 has a diameter substantially equal to that of the pilot flange of the casing 60 and has a depth substantially equal to the distance between the end 62 and groove 63, i. e. the width of the pilot flange as illustrated particularly in Fig. 2. Bolts 66 are mounted in and project freely through the plate 15 and are screw threaded into plate 67 which serves as a nut. Between the plate or nut 67 and the body of plate 15 is an adjustable clamp 68 having circularly projecting spring arms or fingers 69 of curvature substantially conforming to that of groove 64. The arms or fingers 69 have offset cam ends to yieldably engage the inner radial surface of the pilot flange within groove 63. The body portions of the plates 68 have slots 70, as shown in Fig. 3, which permit it to be adjusted to move spring fingers 69 radially into and out of groove 63 for clamping engagement with the pilot flange of casing 60. Clamping plates 68 have outwardly bent tongues 68' at the upper and lower ends thereof, as viewed in Fig. 3, which project beyond the periphery of nut plate 67 and are accessible for facilitating radial movement of the clamping plate when the bolts 66 are not tightened. As many of these clamping plates may be provided as are necessary. Once they are adjusted to groove 63 in casing 60 and, hence, with relation to the pilot flange, they may be fixed into position by tightening the bolts 66, the heads of which are accessible from the upper or outer surface of plate 15.

The cam 70 is mounted on the end of the shaft 61, which projects through the annular plate 15 into operative relation to the circuit breakers. The single lobe of the cam is indicated by the words "Close" and "Open" in Fig. 5. This cam operates the two circuit breaker riders 26 alternately 180° apart so that the spark plugs served by the respective magneto units are fired alternately. By employing a cam of two lobes, the magneto can be made to fire the plugs simultaneously each 180° of arc.

The magneto rotor is seated upon the shaft 61 beneath the cam and in operative alignment with the stator shoes. The shaft 61 has a seat 71 upon which the rotor rests. Both the cam and the rotor are keyed to the shaft.

In Fig. 7, which is a section on the line 7—7 of Fig. 6, the numeral 72 indicates generally the frame of the rotor, which may conveniently be an aluminum casting having an annular plate 73 and a hub 74. The core pieces are laminated and are riveted to the plate 73 by means of brass cover plate 75 and rivets 76. Two magnets, 77 and 78, are arranged at 90° to each other, as indicated in Fig. 6, with their north poles in adjacent position. The north poles of the magnets are seated in appropriate grooves in laminated core piece or shoe 79 which is riveted to the plates 73 and 75. The other ends of the magnets are similarly seated in V-shaped core piece 80, mid-portions of which are cut out to provide three shoes. The middle shoe is substantially inactive so that there are provided by this arrangement a single north and two operative south poles, all of which are located within an arc of 180°. This produces a complete reversal of flux in the coil core once in each revolution of the rotor.

A wiring diagram for single circuit is illustrated in Fig. 8, it being understood that a similar wiring diagram would be provided for the second magneto circuit. No attempt has been made in this diagram to time the cam with relation to the position of the magnets, the particular arrangement being chosen for clarity of representation rather than for operative accuracy. In this figure is shown the rotor with the top plate 75 removed and the cam and breaker displaced to the extremity of the diagram. The ends of the primary and secondary of the coil are connected to the circuit breaker 12 and to the condenser 11, both of which are grounded. The other end of the primary is connected to ground, and the other end of the secondary is connected to a spark plug, which is grounded on the other side of the gap. When the leading end of shoe 80 becomes aligned with the second stator shoe, the shoe 79 is aligned with the first stator shoe and flux passes through the core in one direction. When the shoe 79 reaches the second stator shoe, the following end of shoe 80 reaches the first stator shoe and direction of the flux through the core is reversed. The cam is set on the shaft to make the most efficient use of this arrangement. Adjustment can be made by pivoting the arms 18 to new positions. Additional adjustments can be made by moving the frame 14 clockwise and counter-clockwise on the casing 60.

A particular advantage of this invention is in the construction of the supporting frame and in

the means for adjustably supporting it upon the casing of the machine.

Another advantage of the invention is in the novel means of mounting the several parts of the magneto upon each other and upon the frame.

Although only one embodiment of the present invention has herein been illustrated and described, it is to be expressly understood that the same is not limited thereto. Various changes may be made in the design and arrangement of the parts illustrated and in the materials used without departing from the spirit and scope of the invention, as will now be apparent to those skilled in the art. For a definition of the limits of the invention, reference is had primarily to the appended claims.

What is claimed is:

1. A connection comprising an annular body having an annular groove in the curved side beneath the end, a frame having a portion adapted to rest upon the annular body, a plate attached to the frame in proximity to the annular body having circularly projecting arms with offset, cam-like ends adapted to enter said groove, and means to adjust said plate and to fix it in adjusted position.

2. A stator for a magneto comprising a frame having an annular recess for receiving a circular pilot flange on a support, said flange having inner and outer radial surfaces, and means for securing said frame against axial movement relative to said flange and for frictionally holding the same against relative angular movement, said means including a plurality of plates having spring fingers extending therefrom for frictional engagement with the inner radial surface of said flange and screws and nuts clamping said plates to said frame.

3. Apparatus as defined in claim 2 wherein each screw extends freely through the frame and plate for threaded engagement with a nut.

4. Apparatus as defined in claim 3 wherein the heads of the screws are accessible from the side of the frame opposite said recess.

5. Apparatus as defined in claim 2 wherein the screws extend freely through the frame and plates, the openings in said plates through which the screws extend being elongated to permit radial movement of the plates when the same are not clamped by said screws and nuts, whereby said spring fingers may be moved into and out of axial alignment with the pilot flange on the support.

6. Apparatus as defined in claim 5 wherein each plate is secured by a plurality of screws which engage a single nut in the form of a plate having a plurality of threaded openings therein.

7. Apparatus as defined in claim 5 wherein the end portions of said spring fingers are constructed to engage the pilot flange during the tightening of the screws and nuts before the plates on which said fingers are carried are drawn into face-to-face engagement with the frame.

8. A stator plate for a flywheel magneto, having a recess with a cylindrical wall adapted to receive and closely fit the periphery of a pilot flange on an engine crankcase and an end wall adapted to engage an outer end face of said pilot flange, a plurality of spring-finger carrying members mounted on the inner face of the plate with the fingers adapted to engage the inner end face of said pilot flange to hold the plate against axial displacement and to frictionally hold the plate in various positions of angular adjustment, said members being mounted on the stator plate for movement radially of said recess from positions in which their spring fingers project inwardly beyond the cylindrical wall of said recess to positions in which the spring fingers lie wholly outside such wall, each said member having a part extending therefrom and accessible for moving the member radially from one of said positions to the other, and screws and nuts for holding the members in the first-named radial positions, each screw passing freely through the stator plate with its head engaging the outer face thereof and threading into its nut, each nut being operatively engaged with its member to draw the same toward said plate, the head of each screw being accessible from the outer face of the stator plate.

9. A stator plate for a flywheel magneto, having a recess with a cylindrical wall adapted to receive and closely fit the periphery of a pilot flange on an engine crankcase and an end wall adapted to engage an outer end face of said pilot flange, a plurality of spring-finger carrying members mounted on the inner face of the plate with the fingers adapted to engage the inner end face of said pilot flange to hold the plate against axial displacement and to frictionally hold the plate in various positions of angular adjustment, said members being mounted on the stator plate for movement radially of said recess from positions in which their fingers project inwardly beyond the cylindrical wall of said recess to positions in which the fingers lie wholly outside such wall, each said member having a part extending therefrom and accessible for moving the member radially from one of said positions to the other, and screws and nuts for drawing the members toward said plate to carry the fingers against the inner end face of the pilot flange, each screw passing freely through the stator plate with its head engaging the outer face thereof and threading into its nut, the nuts being operatively engaged with the members to draw the same toward the plate and carry the fingers against said inner end face of the pilot flange when the screws are tightened and thereby adjust the pressure of the fingers on said inner end face.

10. A stator plate for a flywheel magneto, having a recess with a cylindrical wall adapted to receive and closely fit the periphery of a pilot flange on an engine crankcase and an end wall adapted to engage an outer end face of said pilot flange, a plurality of spring-finger carrying members mounted on the inner face of the plate with the fingers adapted to engage the inner end face of said pilot flange to hold the plate against axial displacement and to frictionally hold the plate in various positions of angular adjustment, said members being mounted on the stator plate for movement radially of said recess from a position in which their fingers project inwardly beyond the cylindrical wall of said recess to a position in which the fingers lie wholly outside such wall, and screws and nuts for drawing the members toward said plate and the fingers against the inner end face of the pilot flange, each screw passing freely through the stator plate with its head engaging the outer face thereof and threading into its nut, said nuts being operatively engaged with their members to draw the latter toward the plate and the fingers against said inner end face of the pilot flange when the screws are tightened and thereby adjust the pressure of the fingers on said inner end face.

11. Apparatus as defined in claim 10 wherein

the screws pass through elongated slots in said spring-finger carrying members whereby said members are guided in their radial movements.

12. A stator plate for a flywheel magneto, having a recess with a cylindrical wall adapted to receive and closely fit the periphery of a pilot flange on an engine crankcase and an end wall adapted to engage an outer end face of said pilot flange, a plurality of spring-finger carrying members mounted on the inner face of the plate with the fingers adapted to engage the inner end face of said pilot flange to hold the plate against axial displacement and to frictionally hold the plate in various positions of angular adjustment, said members being mounted on the stator plate for movement radially of said recess from positions in which their fingers project inwardly beyond the cylindrical wall of said recess to positions in which the fingers lie wholly outside such wall, each member having a bent part engageable with the pilot flange as a fulcrum, and screws and nuts for swinging said members about their fulcrums to press the fingers against the inner end face of the pilot flange, each screw passing freely through the stator plate with its head engaging the outer face thereof and threading into its nut, each nut being operatively engaged with its member to move its finger-carrying end toward and against said inner end face of the pilot flange when its screw is tightened, whereby to adjust the pressure of the fingers on said inner end face.

GLEN H. DINGMAN.

REFERENCES CITED

The following references are of record in the file of this patent:

UNITED STATES PATENTS

Number	Name	Date
1,113,147	Zahringer	Oct. 6, 1914
1,610,033	Hawkins	Jan. 4, 1927
2,363,436	Pancoe	Nov. 21, 1944
2,487,095	Brownlee	Nov. 8, 1949

Jan. 22, 1952 A. L. BROWNLEE 2,583,466

FLYWHEEL MAGNETO

Filed June 10, 1950 3 Sheets-Sheet 1

Fig. 1.

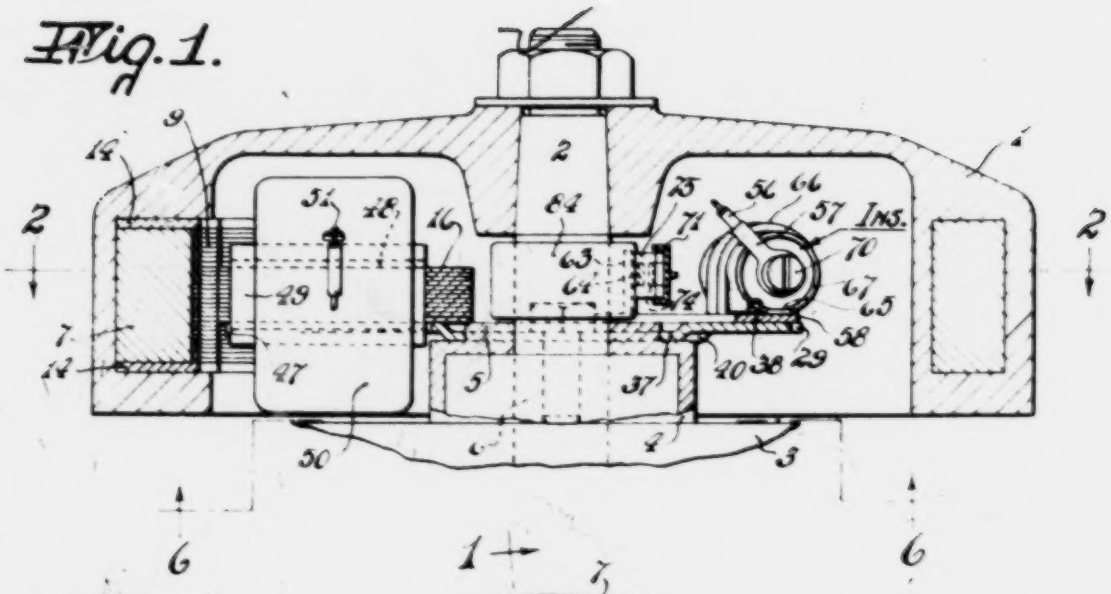

Fig. 2.

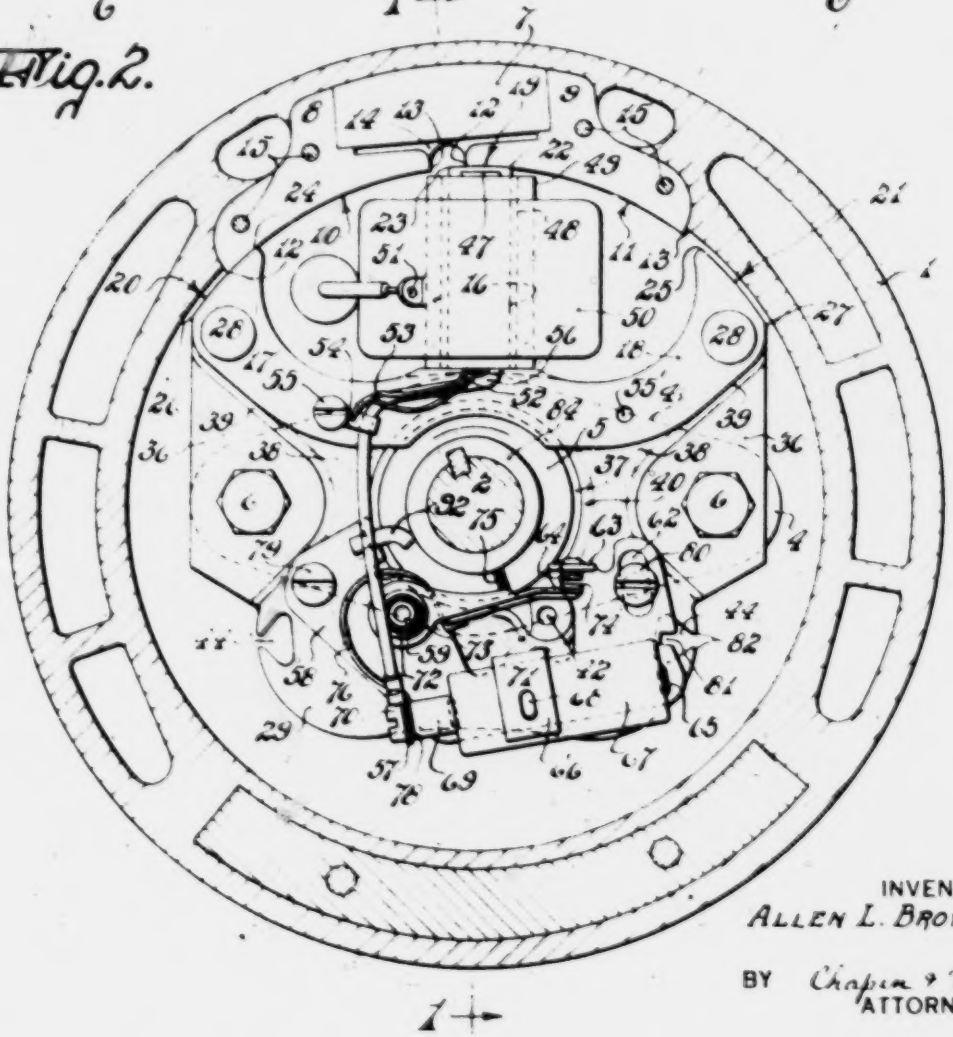

INVENTOR
ALLEN L. BROWNLEE

BY Chapin & Neal
ATTORNEYS

Jan. 22, 1952 A. L. BROWNLEE 2,583,466

FLYWHEEL MAGNETO

Filed June 10, 1950 3 Sheets-Sheet 2

Fig. 3.

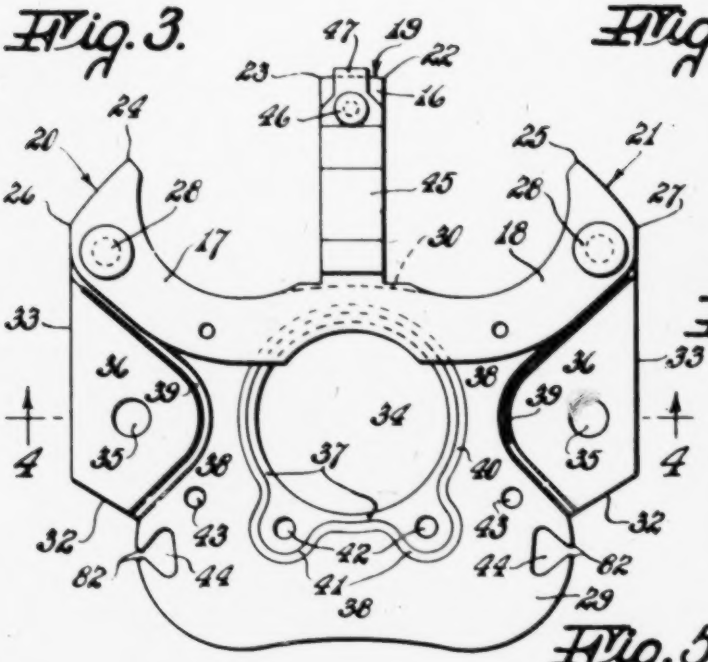

Fig. 8.

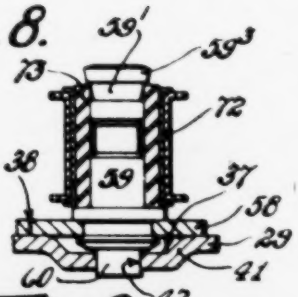

Fig. 9.

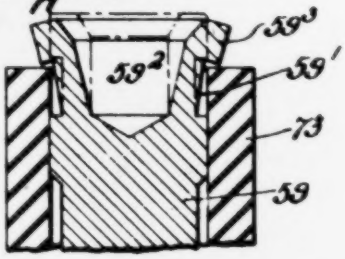

Fig. 5.

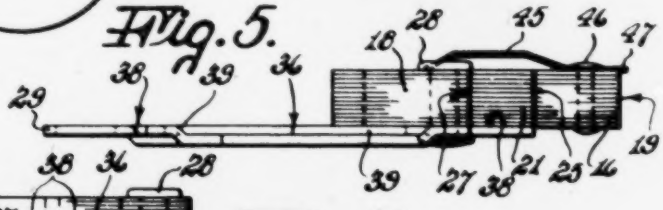

Fig. 4.

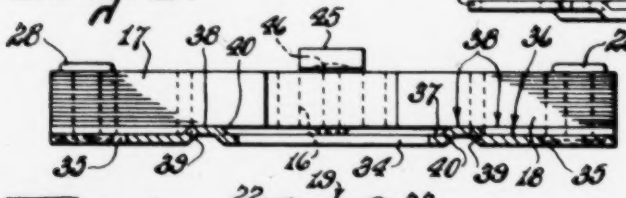

Fig. 7.

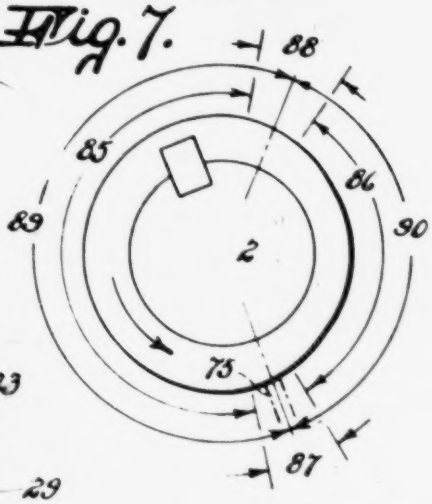

Fig. 6.

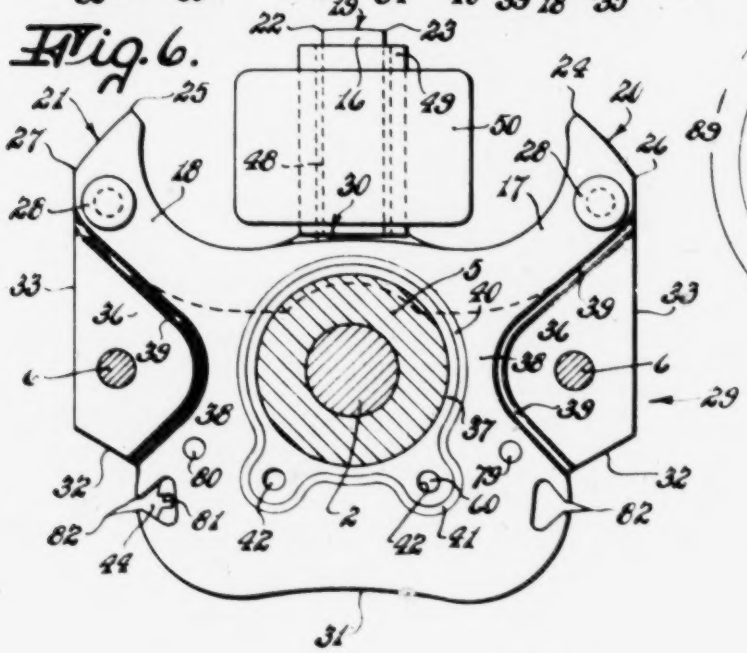

INVENTOR
ALLEN L. BROWNLEE

BY Chapin & Neal
ATTORNEYS

Jan. 22, 1952 A. L. BROWNLEE 2,583,466

FLYWHEEL MAGNETO

Filed June 10, 1950 3 Sheets-Sheet 3

Fig. 10.

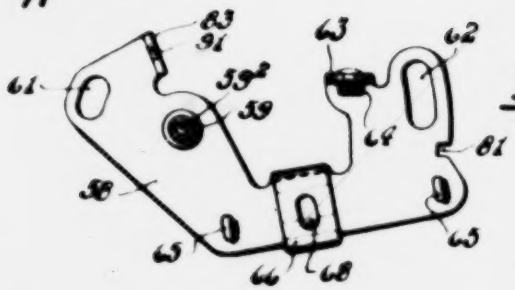

Fig. 12.

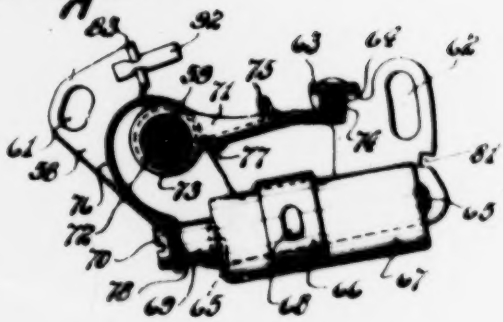

Fig. 11.

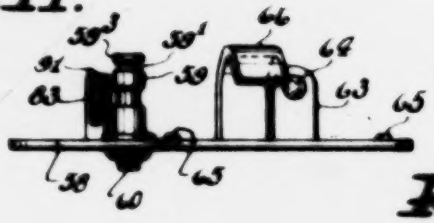

Fig. 13.

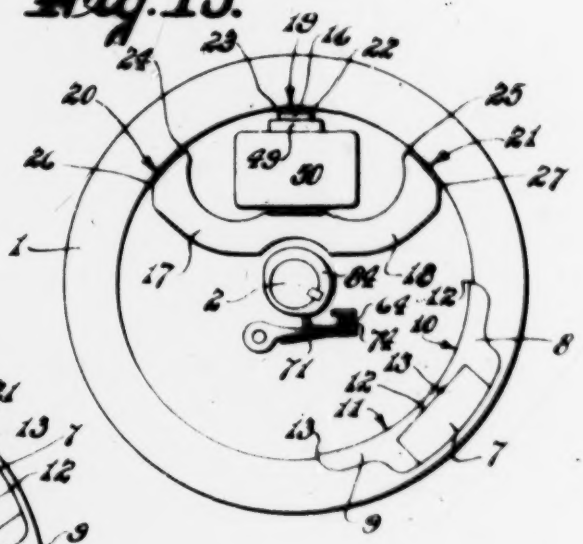

Fig. 14.

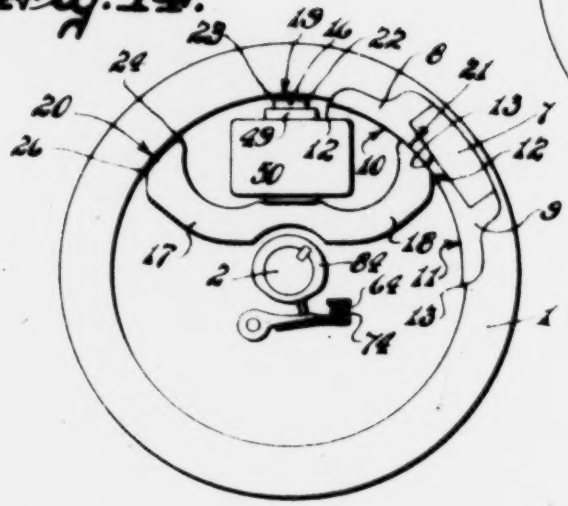

INVENTOR
ALLEN L. BROWNLEE

BY Chapin & Neal
ATTORNEYS

Patented Jan. 22, 1952

2,583,466

UNITED STATES PATENT OFFICE

2,583,466

FLYWHEEL MAGNETO

Allen L. Brownlee, West Springfield, Mass., assignor to Wico Electric Company, West Springfield, Mass., a corporation of Massachusetts

Application June 16, 1950, Serial No. 167,399

15 Claims. (Cl. 171—209)

1

This invention relates to improvements in flywheel magnetos, adapted for the ignition of internal combustion engines and, more particularly, engines, such as outboard motors, and those used on lawn mowers, motorized bicycles, scooters, chain saws and the like, which operate at very high speeds.

The invention is an improvement on that disclosed in the Harmon patent No. 2,101,392, dated December 7, 1937. The magneto disclosed in this patent is satisfactory for engines, which operate at about 300 revolutions per minute or less. It is not satisfactory for engines operating at much higher speeds because it produces each revolution, in addition to the ignition spark, an unwanted or so-called "maverick" spark, which is of sufficient intensity and occurs at such time as to adversely affect the operation of the engine by causing pre-ignition and loss of power. In this type of magneto, one complete reversal of magnetic flux through the coil-carrying core is effected once during each revolution and this flux reversal is utilized to produce the ignition spark. The breaker points which control the circuit of the primary coil, are closed at the start of such reversal and opened at the end of such reversal to produce the E. M. F., relied on for the ignition spark. This flux reversal, however, is preceded by an increase or building up of flux in the coil-carrying core and is followed by a decrease of flux through the core, both increase and decrease occurring while the breaker points are open. An E. M. F. is produced by the flux increase and also by the flux decrease. The amount of E. M. F. produced increases with the speed, other factors being equal. The E. M. F. produced following the flux reversal occurs at such a time in the engine cycle as to cause no trouble. The E. M. F. produced by the flux increase, however, occurs at such a time, as to cause pre-ignition, if the voltage is sufficiently high. The maverick E. M. F. produced at low engine speeds, say 3000 R. P. M. or less, was not high enough to cause trouble but, if the magneto is operated at high speeds, presently being used such as 5000 to 7000 R. P. M. the maverick E. M. F. becomes very high, say 3000 volts, and will cause pre-ignition and resulting power loss. As engine speeds increased from those originally used with the magneto of the Harmon patent, unsymmetrical pole shoes and/or unsymmetrical faces on the outer ends of the legs of the laminated armature were used in order to weaken the maverick E. M. F. and prevent a maverick spark of sufficient intensity to cause pre-ignition.

2

This is as shown, for example, in the Alstrom and Brownlee Patent No. 2,447,727, granted August 24, 1948. As engine speeds became still higher, the use of such unsymmetrical shoes and faces was no longer effective to keep the voltage, occurring from the building up of flux, within sufficiently low limits to prevent pre-ignition and the resultant interference with engine operation.

This invention has for an object the provision of improvements in flywheel magnetos of the general type shown in the Harmon patent for preventing the occurrence of a maverick spark even though the magneto is operated at the very high speeds at present contemplated.

The invention also has for an object the provision of an improved stator plate construction for a flywheel magneto, adapted for mass production at low unit cost, being made as a stamping from thin sheet metal with offset portions shaped to give adequate rigidity at the necessary locations.

The invention has for another object the provision of a stator plate of magnetic material functioning as part of the armature which it supports.

The invention has for another object an improved stator plate with provisions for a right and left hand mounting thereon of the breaker point mechanism to adapt the latter for use with an actuating cam rotating in either direction.

The invention has for a further object the provision in a flywheel magneto of breaker point mechanism and a condenser mounted as a separate unit on a supporting plate, adapted for attachment to the stator plate of the magneto.

Another object of the invention is to anchor the spring of the breaker lever to the insulated terminal of the condenser and utilize it as an electrical conductor, both lever and condenser and the stationary point being mounted on a single plate which is adjustably secured to the stator plate, the adjustment of the breaker plate on the stator plate being for the purpose of varying the extent of opening of the breaker points and such adjustment being capable of being made without changing the force of the spring, which tends to hold the breaker points engaged.

These and other objects will best be understood from the following description of the invention in connection with the one illustrative example of it shown in the accompanying drawings, in which

Fig. 1 is a full size sectional elevational view, taken on the line 1—1 of Fig. 2, of a flywheel magneto embodying the invention;

Fig. 2 is a full size sectional plan view taken on the line 2—2 of Fig. 1, showing the parts in the positions which they occupy at the time of production of the ignition spark;

Fig. 3 is a top plan view of the stator plate and armature;

Fig. 4 is a sectional view taken on the line 4—4 of Fig. 3;

Fig. 5 is an end elevational view of the stator plate and armature;

Fig. 6 is a fragmentary sectional view taken on the line 6—6 of Fig. 1;

Fig. 7 is an enlarged view of the cam for actuating the breaker lever;

Fig. 8 is an enlarged fragmentary sectional view of the pivotal mounting of the breaker lever;

Fig. 9 is a much enlarged view of the upper portion of Fig. 8, illustrating how the hub of the breaker lever is held to its pivot;

Figs. 10 and 11 are plan and side elevational views of the breaker plate;

Fig. 12 is a plan view of the complete breaker unit;

Fig. 13 is a digrammatical view showing the relative positions of pole shoes and cooperating armature faces for the early limit time of closure of breaker points; and

Fig. 14 is a view similar to Fig. 13 but showing the relative positions of pole shoes and cooperating armature faces for the late limit time of closure of the breaker points.

Referring to these drawings, the magneto includes a flywheel 1 (Figs. 1 and 2) adapted to be fixed as indicated to the outer end of the crankshaft 2 of an internal combustion engine, a portion of the crankcase of which is designated 3. Such portion has a boss 4, having a cylindrical pilot hub 5 (see also Figs. 3 and 6) coaxial with the crankshaft and having tapped holes (Fig. 2), one on each side of the hub, to receive screws, such as 6, by means of which the stator element of the magneto is fixed to the crankcase.

The flywheel has a rim of non-magnetic material (Fig. 2) in which a permanent magnet 7 and two pole shoes 8 and 9 are embedded or otherwise fixed thereto. These shoes 8 and 9, which are fixed one to each polar end of magnet 7, have concave curved faces 10 and 11, respectively, which are of equal radius and coaxial with the flywheel. The adjacent edges of these shoes are separated by a small acute angle, as shown about 9°, and they are of equal angular extent and symmetrically located with reference to a radial center line passing through the magnet at a location centrally between its polar ends. The leading and trailing edges 12 and 13, respectively, of each shoe are separated by an acute angle several times larger, about four as shown, than the angle which separates their adjacent edges. The angular spacing between the trailing edge 13 of the pole shoe face 11 and the leading edge of the pole shoe face 10 is a little less than 90°, say 85°. The shoes are made up of laminations (Fig. 1) clamped between two non-magnetic plates 14 by rivets indicated in Fig. 2 at 15. This fastening means holds the two shoes and the magnet together to facilitate the embedding of these parts in the rim of the flywheel during the casting of the same.

The stator of the magneto includes a three-legged armature structure made up of iron laminations and stationarily supported inside the flywheel as indicated in Fig. 2. This armature is shown separately in Figs. 3, 4 and 5. It includes a central leg 16, which is disposed radially of the flywheel and forms a core, and two outer legs 17 and 18, which are located one on each side of leg 16 and the inner ends of which are united to the inner end of the central leg. The legs 17 and 18 extend outwardly in diverging relation with the central leg. The legs 16, 17 and 18 have on their outer ends curved faces 19, 20 and 21, respectively, which have the same radius and one just slightly less than the radius of the faces 10 and 11 of the pole shoes and are intended to be positioned coaxially of the flywheel as will later appear. The central leg or core 16 (Fig. 4) is of approximately square cross section. The angular spacing (Fig. 2) between the front and rear edges 22 and 23, respectively, of face 19 is just slightly greater than the spacing between the adjacent edges 13 and 12 of the faces 10 and 11 of pole shoes 8 and 9, respectively. The angular spacing between the front edge 24 of the face 20 and the rear edge 23 of face 19 is just slightly less than the angular spacing between the leading and trailing ends 12 and 13 of either pole shoe. The angular spacing between the front edge 22 of face 19 and the rear edge 25 of face 21 is equal to that between the leading and trailing ends 12 and 13 of pole shoe 9 and preferably and as shown to that between the edges 24 and 23. The angular spacing between the rear edge 25 of face 20 and its front edge 24 equals the angular spacing between the rear edge 25 of face 21 and its front edge 27 and exceeds the angular spacing between the front and rear edges 22 and 23 of face 19. The armature structure, as shown, is symmetrical with reference to the radial center line of core 16.

The armature described is secured by rivets 28 to a supporting plate 29, as best shown in Figs. 3, 4, 5 and 6. This plate is made as a stamping of thin sheet steel. One end edge 30 (Figs. 3 and 6), of this plate substantially coincides with the outer face of the legs 17 and 18 and the curved faces 20 and 21 on their outer ends. The magnetic quality of this plate is utilized as part of the armature in that it adds to the cross section of the legs the equivalent of two laminations (Fig. 5). The other end edge 31 of plate 29 is complementary to the first-named edge 30, except for the angular edges 32. The side edges 33 are straight and parallel. The contour of the plate is not critical. However, it is important that all edges of the plate, except those which coincide with the faces 20 and 21 on the outer ends of legs 17 and 18, be spaced from the axis of the flywheel by radial distances substantially less than the radius of the faces 10 and 11 of the pole shoes in order to maintain a large air gap between the magnet shoes 8 and 9 and the magnetic plate 29. This plate has a circular opening 34 to closely fit the outer periphery of the pilot hub 5 and is mounted thereon. On each side of opening 34 are holes 35 for the screws 6, which clamp plate 29 against the face of boss 4. This plate is made of thin steel and as shown has a thickness of about $\frac{1}{16}$ inch. Certain portions of the plate are offset from other portions thereof by a distance about equal to the thickness of the plate. Thus, the side areas 36 and a central area 37 are in a plane lower than the parallel plane in which the intervening area 38 is located. This offsetting provides the necessary rigidity for the thin plate. It results in half ribs, such as 39, which connect the portions 36 and 38 and a half rib 40, which connects the portions 37 and 38 and

is substantially annular except for two offsets 41, extending one around each of two holes 42, which are pilot holes for locating with precision the pivot of the breaker mechanism, as will later appear. The plate also has two tapped holes 43 for use in attaching the breaker mechanism and two notches 44 for a purpose to be later described. The stator plate 29 and all the parts described, (except holes 35) are symmetrical about an extended diameter of opening 34, which diameter passes centrally through the core 16. The holes 35 are unsymmetrically spaced from the opening 34 to prevent mounting the plate on the crankcase in any other than the illustrated position.

The plate described is fixed, as shown in Fig. 2, by two screws 8 which pass through holes 35 and thread into the tapped holes in boss 4, the opening 34 closely fitting the outer periphery of pilot hub 5 and accurately locating the curved faces 18, 20 and 21 of the armature in coaxial relation with the crankshaft 1 and flywheel 2 and the pole shoes 8 and 9 of the magnet. The bottom face of the portion 37 of plate 29 abuts the shoulder at the bottom of the pilot hub 5 (Fig. 1). This leaves sufficient clearance between the end face of hub 5 and the lower face of the laminated armature, which partially overlaps the opening 34. The half-rib 40, which encompasses the part 37, gives strength and rigidity to the plate at a location, which is very important because of its function of locating the curved faces of 18, 20 and 21 coaxially of the flywheel and crankshaft. It is also important to have rigidity between the core structure and the areas of plate 29, which are clamped to the engine crankcase by screws 6, and the half ribs 39 (Fig. 2), provide this rigidity. Each such half rib partialy encompasses a fastening screw 6 and then follows along an outer portion of the lower face of the outer legs of the armature structure.

Referring again to the armature, the central leg or core 16 (Figs. 3, 4 and 5) has fixed to one face thereof a spring 46. As shown, this spring is secured near one end by a rivet 48 and has an extension 47 beyond the rivet. A coil unit (Figs. 2 and 6), comprising a central tubular core 48 of hollow square cross section; a primary coil 49 mounted upon the core; and a secondary coil 50 mounted upon the primary coil 49, is placed on core 16. As the core 48 is slide on core 16, the spring 46 will be compressed to some extent and its acts to take up any play between core 16 and the tubular core 48, which encompasses it. The coil unit is held in place by bending the extension 47 (Figs. 1 and 2) over and upon the upper end face of the core 48. Secondary coil 49 has a terminal 51 for connection to the spark plug of the engine. The coils 49 and 50 (Fig. 2) have ground wires 52 and 53, respectively, which are connected together and soldered to a clip 54. This clip is fastened to the armature structure by a self tapping screw 55 threaded into one of two holes 56', provided in such structure. The other terminal of the primary coil 49 is connected to a wire 56, having a lug 57 on its outer end. The clip 54 is bent over and upon this wire 56 to hold it in place.

The breaker point mechanism and the condenser therefor are provided as a separate unit, which may be readily removed form and replaced on the stator plate 29. One such unit is shown separately in Fig. 12. Another similar unit (not shown) is made reversely to the Fig. 12 unit and can be mounted on plate 29 for use when the flywheel and the cam for actuating the breaker

point mechanism rotates clockwise istead of counterclockwise, as shown. The breaker point mechanism includes a flat plate 58 (Figs. 10 and 11), having riveted thereto a stud 59, which projects from the top face thereof and a coaxial pilot 60, which projects from the bottom face thereof. The plate 58 (Fig. 10) also has two slots 61 and 62 thereof, each curved coaxially with the stud 59 and pilot 60. From one edge of plate 58, near slot 62, a lug 63 is bent up at right angles and, secured to this lug, is the stationary breaker point 64. The plate 58 has two spaced parallel abutments 65 struck up therefrom. Between these abutments is a curved clasp 66 bent up from one edge of plate 58. This clasp has a curved portion, of somewhat more than 90° extent, bent to the radius of the casing of a condenser 67. This casing is placed on the left hand abutment 65 with one end beneath clasp 66 and is then pressed to the right until its leading end engages the right hand abutment 65. The left hand end of the casing will then lie just to the right of the left hand abutment and the condenser will be pressed tightly to the plate with its ends engaging the abutments to prevent lengthwise displacement. A hole 68 is provided in clasp 66 to permit the metallic casing 67 to be soldered to clasp 66 if desired. The casing 67 is the ground terminal of the condenser contained in it. The other terminal of the condenser is a small post 69 having a screw 70 threaded therein.

The breaker lever 71 (Fig. 12) is of metal and has at one end a hub 72 encompassing a tube 73 of insulating material, which closely fits the stud 59. The ends of tube 73 (Fig. 8) project beyond the ends of this hub and thus the hub and lever are insulated from the stud 59 and plate 58. The upper end of stud 59 is expanded to hold the breaker arm against removal from the stud. It is important to spread the upper end of the stud to overlie the upper end face of tube 73 without causing any portion of the stud that lies within the tube from being expanded against the inner peripheral surface of the tube. To secure this result, a circumferential groove 59' is formed in the outer periphery of the stud near its upper end. Most of this groove will lie within the tube but the upper wall of the groove is located slightly above the end face of tube 73. Then a punch is forced in the hole 59² in the upper end of stud 59, which expands the upper part of the stud throwing the end 59³ outwardly and a little downwardly until it overlies the upper end face of tube 73 and is spaced therefrom by the desired clearance. The peripheral wall of groove 59' is necessarily expanded to some extent but since it was originally of less diameter than the tube, it can and does expand as much as necessary without touching the internal periphery of the tube and causing binding. The outer end of lever 71 has fixed thereto a breaker point 74 to cooperate with point 64. Fixed to the lever 71 at a location intermediate its ends is a cam follower 75 of insulating material. A spring 76 has right angular bent ends 77 and 78. A portion of the spring passes through a slot in the breaker lever and one end 77 abuts the outer face of the lever. This spring curvees around hub 72 and then extends to the post 69 where its end 78 is secured together with the lug 57 on wire 56 (see Fig. 2) by screw 70. The spring serves as an electrical conductor between the insulated breaker lever and the insulated terminal of the condenser. The spring exerts a radially outward

thrust (to the right as viewed in the drawings) on the breaker lever and thus takes up any clearance between stud 69 and tube 73 and prevents sliding of breaker point 74 on breaker point 64.

The breaker mechanism unit is mounted on the stator plate 29 by laying the breaker plate 58 on plate 29 and inserting the pilot 60 in the left hand pilot hole 42. Screws 78 and 80 are inserted through slots 61 and 62, respectively, to clamp the plates together. Adjustment of the breaker plate around the pivotal axis of the breaker lever may be made to vary the extent of opening of the breaker points and since spring 76 is anchored to condenser 67 on plate 58, the force of the spring, acting to hold the points engaged is not changed by the adjustment. This adjustment may be made while screws 78 and 80 are loosened, by inserting a screw driver in a notch 44 in plate 29 and into a notch 81 in the breaker plate and swinging the screw driver as a lever, using either the upper or lower of the knife edges 82 as a fulcrum, accordingly as the plate 58 is to be turned clockwise or counterclockwise, respectively. The screws 78 and 80 are then tightened to clamp plate 58 in adjusted position. If the flywheel turns clockwise, a reversed form of breaker mechanism is used and its pilot is inserted in the right hand pilot hole 42. Otherwise the plate of the reversed form of breaker mechanism is mounted, adjusted and secured in a manner similar to that described. The second notch 44 is provided to serve as a fulcrum for a screw driver, when used to adjust the plate of the reversed form of breaker mechanism. It is to be noted that the same shaped piece of metal is used for the plate of the reversed form of breaker mechanism but the lug 64, clasp 66 and seat 65 and a lug 83 are bent in the opposite direction from the top face of plate 58.

The follower 75 rides on the periphery of a cam 84 fixed on crankshaft 2. The counterclockwise rotation of this cam creates a thrust on follower 75 to the right but the spring 76 has taken up any clearance between the stud 69 and tube 73 so that the cam will not cause relative sliding of the breaker points. Reverse rotation of the cam would create a thrust to the left on the breaker lever and tend to slide the breaker point 74 on point 64 against the force of spring 76. That is why it is better to provide the reversely formed breaker mechanism and use it where the rotation of the cam is clockwise.

The cam 84 is constructed as best shown in Fig. 7. It has a high dwell surface 85, a low dwell surface 86, a rise surface 87 and a drop surface 88. When the follower 75 is engaged by the rise surface 87, the breaker points will be opened. This occurs at the position shown in Fig. 2. The high dwell surface 85 holds the points open for a substantial interval and then the drop surface 88 allows the points to close and the low dwell surface 86 maintains them closed for an interval of about 137° as shown. When the breaker points are closed, the cam follower 75 does not engage the surface 86, allowing the breaker spring 76 to press the points tightly together. The breaker points open when the cam is positioned as shown in Fig. 2 and then remain open while the cam travels through the angle 89, then closing and remaining closed while the cam is travelling through the angle 90. Fig. 13 shows diagrammatically the position of shoes relatively to the armature structure, when the breaker points close, and Fig. 2 shows the position when they open. The Fig. 13 position provides for a large factor of safety because the primary coil circuit does not need to be closed until a position such as shown in Fig. 14 is reached, where the leading edge 12 of the leading pole shoe 8 is no closer than 5° to the front edge 22 of the curved surface 19 of core 16. As actually shown, the angle 90 between closed and open position is 137°. This angle 90 could be reduced to about 74°, which represents the latest limit for the closing of the primary coil circuit and is shown in Fig. 14. The reason for using an earlier closing of the breaker points is to insure that they will be actually engaged when the pole shoes reach the Fig. 14 position. When the cam allows the breaker points to be engaged by the spring, they will engage but they may not immediately remain in engagement, particularly when the engine is being operated at the very high speeds, such as are prevalent today. The movable breaker point may impinge on the fixed breaker point and rebound, separating the points, after which, the points may reengage and again rebound and separate and then close and remain closed. The mass of breaker level is made as small as possible in order to reduce as much as possible the rebounding of the movable breaker point following its initial engagement with the fixed breaker point. However, for full insurance that the points will be closed from at least the Fig. 14 position to the Fig. 2 position of the pole shoes, it is better to close the breaker points at some earlier time, as for example when the pole shoes are in the Fig. 13 position.

The lug 63 on breaker plate 58 is provided with a vertical slot 91 (Figs. 10 and 11) for the purpose of retaining one end of a piece 92 (Fig. 12) of flexible, absorbent material, such as felt, the other end of which engages the periphery of cam 84 (Fig. 2), and acts as a wiper.

The operation will next be described. Assuming that the flywheel 1 and cam 84 are rotating in a counterclockwise direction, the cam allows the breaker points 64 and 74 to engage when the pole shoes 8 and 9 of the magnet 7 reach the position shown in Fig. 13. As above set forth, this early engagement of the points is to provide for a margin of safety to insure that the movable breaker point 74 finally comes to rest in engagement with the stationary breaker point 64 by the time that the pole shoes reach the Fig. 14 position because it is desired to have the circuit of the primary coil 49 closed when the leading edge 12 of the leading pole shoe 8 approaches closely to the front edge 22 of the face 19 on the core 16 in order to prevent the sudden change of flux, which would otherwise occur at this time if the circuit to the primary coil was open, and the production of a spark of sufficient intensity to ignite the mixture in the cylinder of the engine during the building up of flux in one direction in core 16. The primary circuit should be closed not later than when the rotor reaches the Fig. 14 position and a gap of five degrees exists between the leading edge 12 of shoe 8 and the front edge 22 of the face 19 on core 16 or somewhat greater than the air gap subsequently created between the trailing edges 13 of the shoes 8 and 9 and the rear edges 23 and 25, respectively, of the faces 19 and 21 of the armature at the time of production of the ignition spark (the condition shown in Fig. 2). As shoes 8 and 9, continuing their counterclockwise movement, traverse the curved faces 19 and 21 of core 16 and leg 17, respectively, flux is built up in one direction

through core 16, say for example, from shoe 8 through core 16 and legs 17 to shoe 9. This building up of flux is retarded because the circuit of the primary coil is closed and no substantial E. M. F. is produced. As the shoes 8 and 9 continue their counterclockwise movement the leading edge 12 of shoe 8 will engage the face 20 of leg 17 and the leading edge of shoe 9 will engage the curved face 19 of core 16. This occurs shortly before the trailing edges 13 of the shoes 8 and 9 respectively leave the edges 23 and 25 of the faces 19 and 21, respectively. As the shoes leave the last-named edges, the former magnetic circuit through core 16 is broken and one established in the opposite direction. That is, flux now passes from shoe 8, through leg 17 and then through core 16 to shoe 9. The closed primary coil retards this flux change but when the trailing edges of the shoes 8 and 9 are spaced from edges 23 and 25 of faces 19 and 21, respectively, by a sufficient air gap, for example, as shown in Fig. 2, the cam 84 separates the breaker points 74 and 84 and a reversal of flux occurs through core 16 and the high voltage for the ignition spark is produced. The flux reversal consists of a decrease from a maximum in one direction to zero followed by an increase from zero to a maximum in the opposite direction. On continued rotation, the shoes 8 and 9 will leave the faces 20 and 19 respectively, causing a decrease in flux through core 16 to zero. An E. M. F. will be produced by this decrease in flux but it occurs at such a time in the engine cycle as to do no harm.

The closing of the breaker points during the building up of flux in the first-named direction to suppress the maverick spark, which would cause pre-ignition, limits the maximum to which the flux can build up in such direction and causes a loss. To help offset this loss, several compensating factors have been employed. A magnet, having much higher coercive force than any available at the time the magneto of the Harmon patent was made is used. The number of turns in the primary coil has been reduced to lessen the choking effect of the call, when in closed circuit. And the design of the armature is of great importance. The particular armature shown has a short core, short pole shoes and leakage is low. With this magnetic circuit as a basis, I have been able by the use of compensating factors to secure enough build-up of magnetic flux to provide adequate ignition under all usual conditions of engine operation. The spark at the higher speeds is not as large as it is at lower speeds but it is adequate for ignition at that time. The more difficult ignition condition is when the engine is operated at lower speeds by retarding the time of ignition and that condition is met by the better spark then produced. The use of a lesser spark at the higher engine speeds at which the engine is operated most of the time is an advantage in that it affords longer life of the breaker points. Thus, the invention provides for the suppression of a maverick spark shortly prior to the ignition spark by closing the circuit of the primary coil during the building up of flux in the coil-carrying core that occurs just prior to the reversal of flux through such coil that is utilized to produce the ignition spark. While this tends to decrease the maximum to which flux can build up in one direction in the core and thus to lessen the total amount of the flux change during the reversal, nevertheless, by proper design of the electrical and magnetic components of a magneto, having the particular type of magnetic circuit herein shown, it is possible to secure sufficient flux change to provide adequate ignition for the purpose under all usual conditions of engine operation.

What is claimed is:

1. A flywheel magneto, comprising, a flywheel, a single pair of pole shoes fixed to the flywheel and angularly spaced about the axis of revolution thereof, said shoes having curved polar faces of equal radius coaxial with the flywheel, the adjacent edges of the faces of the two shoes being separated by a small acute angle, the leading and trailing edges of the face of each shoe being separated by an acute angle several times larger than the first-named angle, a source of magnetic flux magnetically interconnecting said shoes, an armature of magnetic material stationarily mounted inside the flywheel and having three legs which are magnetically connected together at their inner ends and diverge outwardly, said legs having on their outer ends curved faces of a radius slightly less than the radius of said pole shoe faces and coaxial therewith, the faces on said legs being angularly spaced about said axis to cooperate with the shoes during rotation of the flywheel, the angular spacing of the front and rear edges of the curved face on the central leg of the armature being substantially commensurate with the angular spacing between the adjacent edges of the two pole shoes, the curved faces on said legs being separated by an angle substantially commensurate with that between the leading and trailing edges of a pole shoe, primary and secondary coils on the central leg of the armature, said shoes being operable on rotation of the flywheel to bridge the polar ends of the source of flux through the central coil-carrying leg first through a first one of the outer legs and then through a second one of the outer legs, whereby a magnetic circuit is created through the coils first in one and then in the other direction, an electrical circuit including said primary coil, and means actuated with the rotation of the flywheel for closing said circuit once during each revolution of the flywheel and before the leading edge of the leading pole shoe approaches closer than five degrees to the front edge of the curved face on said central leg and maintaining such circuit closed until the leading edge of the leading pole shoe connects with the front part of the curved face on the second outer leg and its trailing edge is spaced from the rear edge of the central leg by about three degrees, and the leading edge of the trailing pole shoe connects with the front part of the curved face on the central leg and the trailing edge of the trailing shoe is spaced from the rear edge of the curved face on the first outer leg by about three degrees, and then opening said circuit.

2. A flywheel magneto, comprising, a flywheel, a single pair of pole shoes fixed to the flywheel and angularly spaced about the axis of revolution thereof, said shoes having curved polar faces which are of equal radius and equal angular extent and which are coaxial with the flywheel, the adjacent edges of said faces being separated by a small acute angle, and the leading edge of one shoe being separated from the trailing edge of the other shoe by an angle of about ninety degrees, a source of magnetic flux magnetically interconnecting said shoes, an armature of magnetic material stationarily mounted inside the flywheel and having three legs which are magnetically connected together at their inner ends

and diverge outwardly, said legs having on their outer ends curved faces of a radius slightly less than the radius of said pole shoe faces and coaxial therewith, the faces on said legs being angularly spaced about said axis to cooperate with the shoes during rotation of the flywheel, the angular spacing of the front and rear edges of the curved face on the central leg of the armature being substantially commensurate with the angular spacing between the adjacent edges of the two poles shoes, the curved faces on said legs being separated by an angle slightly less than that between the leading trailing edges of the curved face of a pole shoe, the curved faces on said outer legs being symmetrically spaced with reference to a radial line passing centrally through the central leg, primary and secondary coils on the central leg of the armature, said shoes being operable on rotation of the flywheel to bridge the polar ends of said source of flux through the central coil-carrying leg first through a first one of the outer legs and then through a second one of the outer legs, whereby a magnetic circuit is created through the coils first in one and then in the other direction, an electrical circuit including said primary coil, and means actuated with the rotation of the flywheel for closing said circuit once during each revolution of the flywheel and before the leading edge of the leading pole shoe approaches closer than five degrees to the front edge of the curved face on said central leg and maintaining such circuit closed until the leading edge of the leading pole shoe connects with the front part of the curved face on the second outer leg and its trailing edge is spaced from the rear edge of the central leg by about three degrees, and the leading edge of the trailing pole shoe connects with the front part of the curved face on the central leg and the trailing edge of the trailing shoe is spaced from the rear edge of the curved face on the first outer leg by about three degrees, and then opening said circuit.

3. A stator for a flywheel magneto, comprising a stator plate of thin sheet steel adapted to be secured to the crankcase of an engine and having a cylindrical opening therethrough adapted to receive the pilot hub on such crankcase, a laminated-iron armature fixed to said plate and having three legs which are magnetically interconnected at their inner ends and which diverge outwardly and terminate with curved outer end faces of equal radius located coaxially of said opening and in angularly spaced relation with respect to said axis, primary and secondary coils on the central leg of said armature, said plate having portions contiguous with one side face of the outer legs of the armature and substantially coextensive with such faces, whereby such steel portions function as magnetic parts of said outer legs, the outer peripheral margins of the plate except at the curved faces of the outer legs being spaced from the axis of said opening by dimensions substantially less than the radius of said curved faces.

4. A stator for a flywheel magneto, comprising, a stator plate, an armature of magnetic material fixed thereto, primary and secondary coils mounted on said armature and having one terminal of each grounded thereto, and control means or the primary coil mounted as a separate unit on said stator plate and including a second plate secured to the stator plate for convenient removal and replacement, a breaker point fixed to the second plate, a breaker arm of electrical conducting material pivoted at one end to and insulated from the second plate and having near its other end a breaker point yieldingly urged toward the fixed breaker point, a condenser fixed to the second plate and having one terminal grounded thereto, and electrical connections from the other terminal of the condenser and the other terminal of the primary coil to said breaker arm.

5. A stator for a flywheel magneto, comprising, a stator plate, an armature of magnetic material fixed thereto, primary and secondary coils mounted on said armature and having one terminal of each grounded thereto, a breaker arm of electrical conducting material pivotally supported at one end and insulated from said plate and having near its other end a breaker point, a relatively stationary breaker point supported by said plate for cooperation with the first breaker point, a condenser supported by said plate and having one terminal grounded thereto, a spring for moving the breaker arm to engage the breaker points, said spring having one end fixed to the breaker arm and its other end fixed and electrically connected to the other terminal of the condenser, and a wire connecting the other terminal of the primary coil to the last-named terminal of the condenser.

6. A stator for a flywheel magneto, comprising, a stator plate, an armature of magnetic material fixed thereto, primary and secondary coils mounted on the armature and each having one terminal grounded to the armature, and control means for the primary coil mounted as a separate unit on the stator plate and including a second plate mounted on the stator plate, a breaker point fixed to said second plate, a breaker arm of electrical conducting material pivotally connected at one end to and insulated from the second plate and having fixed thereto near its other end a breaker point for cooperation with the first-named breaker point, a condenser, a metallic casing enclosing the condenser and forming one terminal thereof, said casing being mounted in fixed position on the second plate and thereby grounded thereto, a post fixed to and insulated from said casing and forming the other terminal of the condenser, a spring for moving the breaker arm in one direction to engage the breaker points and yieldingly holding them engaged, said spring being fixed at one end to the breaker arm and at the other end to said post, a wire connecting the other end of the primary coil to said post, and means for securing the second plate to the stator plate for angular adjustment about the pivotal axis of the breaker arm for the purpose of adjusting the extent of opening of the breaker points; the second plate, carrying the condenser casing to which said spring is anchored, being adjustable on the stator plate without varying the force of the spring acting to hold the breaker points engaged.

7. In a stator for a flywheel magneto, a stator plate of thin sheet metal having a cylindrical opening therethrough adapted to receive the pilot hub of an engine crankcase and having holes therethrough one on each side of said opening adapted to receive screws for fastening the plate to such crankcase, said plate having certain face portions in one plane and certain other face portions in another closely-spaced parallel plane, and integral connecting parts between the face portions in different planes, said parts forming half-ribs for stiffening the plate, an armature crossing said plate above said opening and above

said holes and secured at its ends to a portion of said plate that lies in one said plane, said holes located one in each of two other portions located in the other of said planes, the half-rib connecting parts between each latter portion and the portion to which the armature is secured each extending around the inner side of the hole therein and thence diverging outwardly along the inner face of the armature.

8. In a stator for a flywheel magneto, a stator plate of thin sheet metal having a cylindrical opening therethrough adapted to receive the pilot hub of an engine crankcase and having holes therethrough one on each side of said opening adapted to receive screws for fastening the plate to such crankcase, said plate having certain face portions in one plane and certain other face portions in another closely-spaced parallel plane, and integral connecting parts between the face portions in different planes, said parts forming half-ribs for stiffening the plate, an armature crossing said plate above said opening and above said holes and secured at its ends to a portion of said plate that lies in one said plane, said holes located one in each of two other portions located in the other of said planes, the half-rib connecting parts between each latter portion and the portion to which the armature is secured each extending around the inner side of the hole therein and thence diverging outwardly along the inner face of the armature, said opening being formed in an annular portion in the second-named plane and the half-rib part which connects such annular portion to portions in the other plane being substantially annular and coaxial with said opening.

9. A breaker mechanism, comprising, a plate, a stud fixed thereto and projecting from one face thereof, curved slots in said plate one on each side of said stud and concentric therewith, said slots adapted to receive screws for fastening the plate to a support, a breaker arm of electrical conducting material pivotally mounted at one end on and insulated from said stud, a breaker point fixed to the other end of said arm, a lug upturned from said plate at right angles, a breaker point fixed to said lug, a condenser secured to said plate with one terminal grounded thereto, and a spring for the breaker arm tending to move the latter to engage the breaker points.

10. A breaker mechanism, comprising, a plate, a stud fixed thereto and projecting from one face thereof, curved slots in said plate one on each side of said stud and concentric therewith, said slots adapted to receive screws for fastening the plate to a support, a breaker arm of electrical conducting material pivotally mounted at one end on and insulated from said stud and having a breaker point on its other end, a lug upturned from said first-named plate at right angles, a breaker point fixed to said lug, a condenser secured to said plate with one terminal grounded thereto, and a spring for the breaker arm tending to move the latter to engage the breaker points, said spring fixed at one end to said arm and at the other end to the other terminal of said condenser.

11. A breaker mechanism, comprising, a plate, a stud fixed to and projecting from one face of the plate and having a coaxial pilot projecting from the other face of the plate and adapted for closely fitting engagement in a pilot hole in a support to locate said stud with precision on the support, curved slots in said plate one on each side of said stud and concentric with the latter, said slots adapted to receive screws for fastening the plate to such support, a breaker arm of electrical conducting material pivotally mounted at one end on and insulated from said stud, a breaker point on the other end of said arm, a lug upturned from said plate at right angles, a breaker point fixed thereto, a condenser secured to said plate with one terminal grounded thereto, and a spring for the breaker arm tending to move the latter to engage the breaker points.

12. A breaker mechanism, comprising, a plate, a stud fixed to and projecting from one face of the plate, curved slots in said plate one on eacn side of said stud and concentric therewith, said slots adapted to receive screws for fastening the plate to a support, a breaker arm of electrical conducting material pivotally mounted at one end on and insulated from said stud, a breaker point fixed to the other end of said arm, a lug upturned from said plate at right angles, a breaker point fixed to said lug, a condenser on said plate, the latter having bent upwardly from one edge a clasp with a curved part to partially encircle the condenser, and abutments one for each end of the condenser struck up from said face of the plate one on each side of said clasp; said clasp pressing the condenser against the plate and frictionally holding it on the plate and between the abutments, and a spring for the breaker arm tending to move the latter and engage the breaker points.

13. A reversible mounting for the breaker mechanism of a magneto, comprising, a supporting plate for the armature of the magneto having a pilot hole for locating the armature relatively to the driving shaft of the magneto, said plate having right and left pilot holes of equal diameter located equidistant from the center of the first-named pilot hole and spaced one from another by a predetermined angle, said plate having a second pair of holes of equal size located equidistant from the center of the first-named pilot hole and in angularly spaced relation, the holes of the second pair being located on opposite sides of a radial line extending from the center of the first-named pilot hole and bisecting said angle between the second-named pilot holes and having an equal angular spacing with reference to said line, a second plate for supporting the breaker mechanism, a pivot stud fixed to and projecting from one face of the second plate, a pilot stud fixed to and projecting from the opposite face of the second plate coaxially of the pivot stud and having a diameter such as to closely fit in either of said pilot holes, said second plate having therethrough two slots both curved coaxially of the pivot and pilot studs, the radial center line of one slot being equal to the center to center distance between either of the second-named pilot holes and the nearest of the second pair of holes and the radial center line of the other slot being equal to the center to center distance between the same pilot hole and the more remote of the second pair of holes, the second plate being mounted on the first plate with its pilot stud engaged in a selected one of the second named pilot holes, fasteners extending one through each of the curved slots and one into each of the second pair of holes for holding the plates together in various positions of angular adjustment, a breaker lever pivotally mounted on said pivot stud, cooperating breaker points one on said lever and one on the second plate, and a spring for yieldingly holding the breaker points engaged.

14. The combination of claim 13, in which the first plate has two notches one in each of two opposite edges, two walls of each notch intersecting the adjacent one of said edges to form two opposed and closely-spaced knife edges, the two notches and the pairs of knife edges being symmetrically disposed with reference to said radial line, said second plate having in one edge a notch adapted to lie over one or the other of the first-named notches according to whether the pilot stud is engaged in the right or the left pilot hole, whereby a screw driver can be engaged in the notch of the second plate and fulcrummed on one or the other of the adjacent knife edges to move the second plate about the axis of the pivot and pilot studs.

15. A pivotal mounting, comprising, a stud having near one end a flange, and a member having a hub mounted to turn on said stud and having one end face engaging said flange, said stud having its other end spread to overlie the other end face of said hub and retain the latter in axial position on the stud, such end being connected to

the underlying bearing portion of the stud by a stem of less diameter than the bearing portion and located for the most part within said hub, whereby spreading of the stem can occur when the outer end is spread without causing engagement of the stem with the interior periphery of the hub.

ALLEN L. BROWNLEE.

REFERENCES CITED

The following references are of record in the file of this patent:

UNITED STATES PATENTS

Number	Name	Date
2,290,078	Thomas	July 14, 1942
2,469,133	Scott	May 3, 1949

FOREIGN PATENTS

Number	Country	Date
391,379	Great Britain	Apr. 27, 1933
377,582	Germany	June 22, 1923

Certificate of Correction

Patent No. 2,583,466 January 22, 1952

ALLEN L. BROWNLEE

It is hereby certified that error appears in the printed specification of the above numbered patent requiring correction as follows:

Column 1, line 12, for "300" read *3000*; column 5, line 28, for "encompases" read *encompasses*; line 51, for "compresed" read *compressed*; column 8, line 25, for "level" read *lever*;

and that the said Letters Patent should be read as corrected above, so that the same may conform to the record of the case in the Patent Office.

Signed and sealed this 15th day of April, A. D. 1952.

[SEAL]

THOMAS F. MURPHY,
Assistant Commissioner of Patents.

March 25, 1952 J. C. SLONNEGER 2,590,134

INTERNAL-COMBUSTION ENGINE

Filed March 14, 1946 7 Sheets-Sheet 1

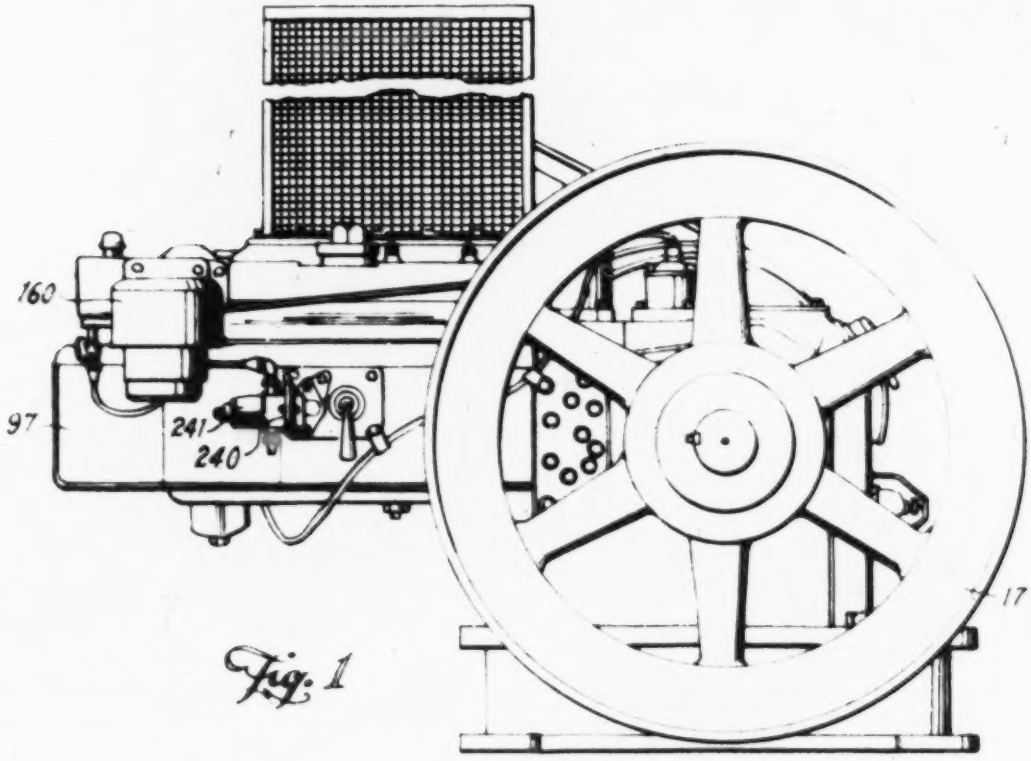

Fig. 1

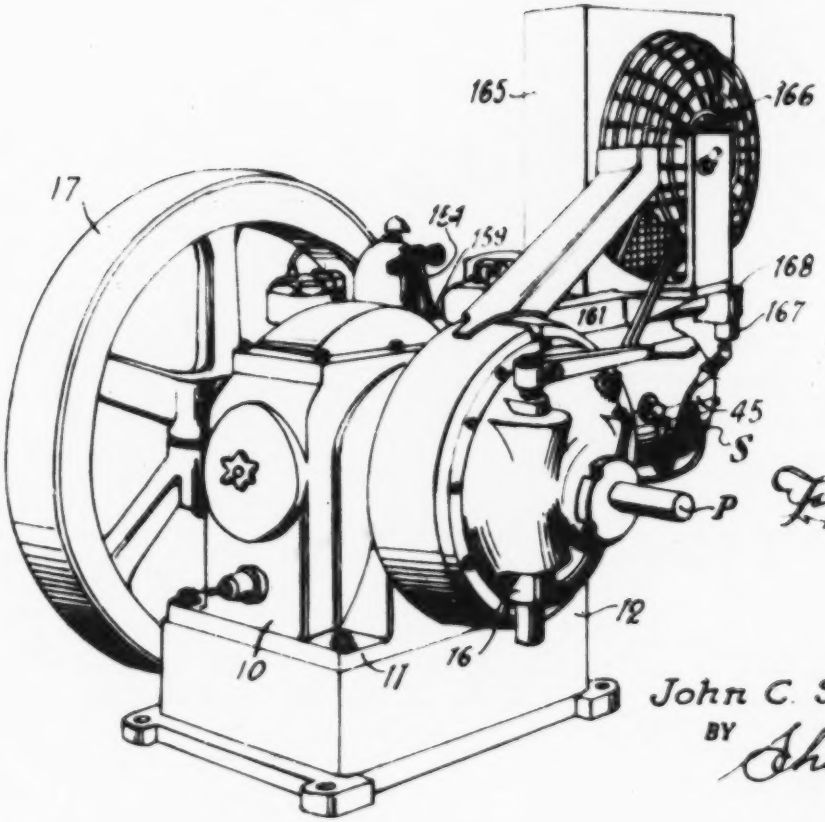

Fig. 2

INVENTOR.
John C. Slonneger
BY Ashley & Ashley
ATTORNEYS

March 25, 1952 J. C. SLONNEGER 2,590,134

INTERNAL-COMBUSTION ENGINE

Filed March 14, 1946 7 Sheets-Sheet 2

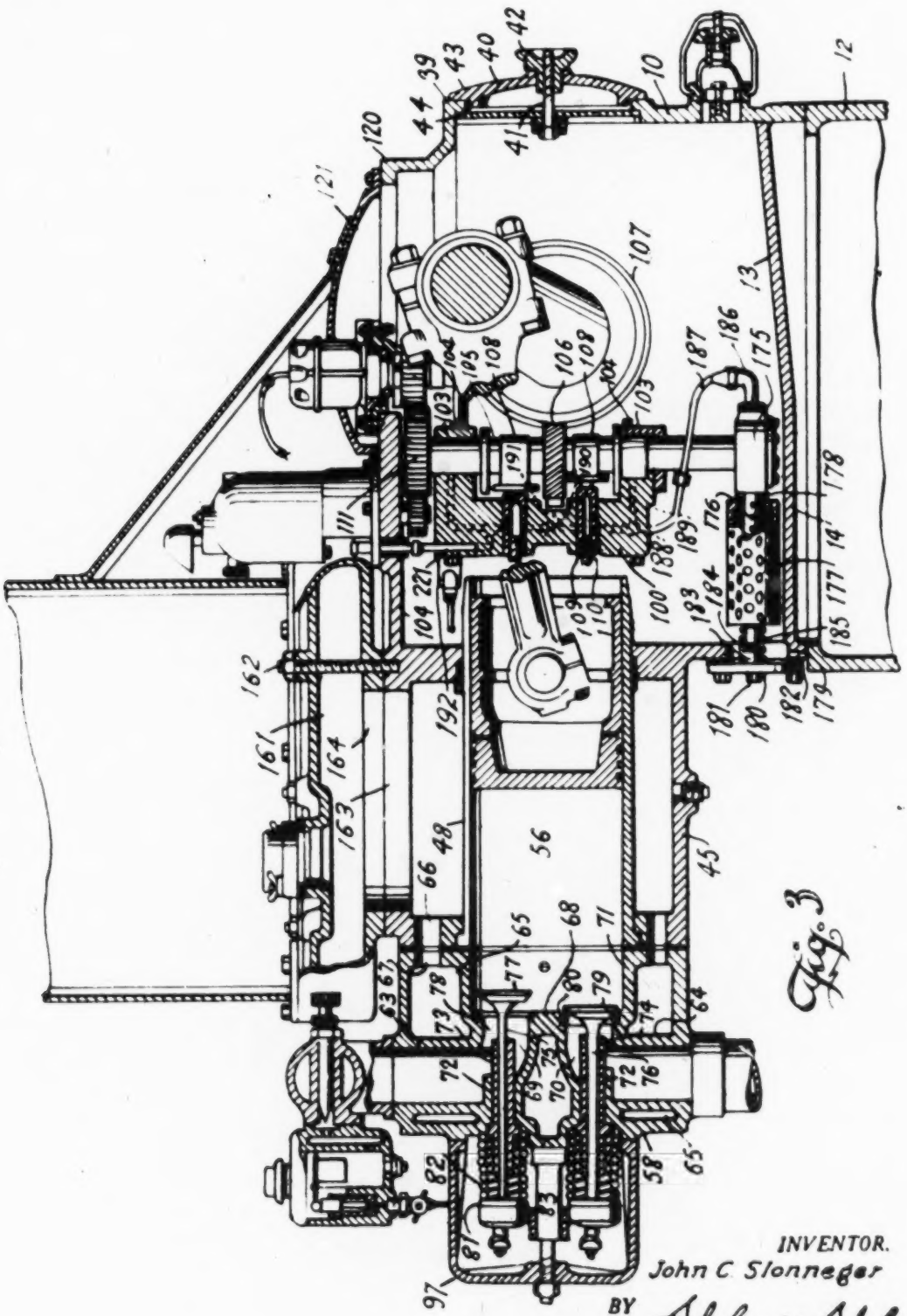

Fig. 3

INVENTOR.
John C. Slonneger
BY Ashley & Ashley
ATTORNEYS

March 25, 1952 J. C. SLONNEGER 2,590,134

INTERNAL-COMBUSTION ENGINE

Filed March 14, 1946 7 Sheets-Sheet 3

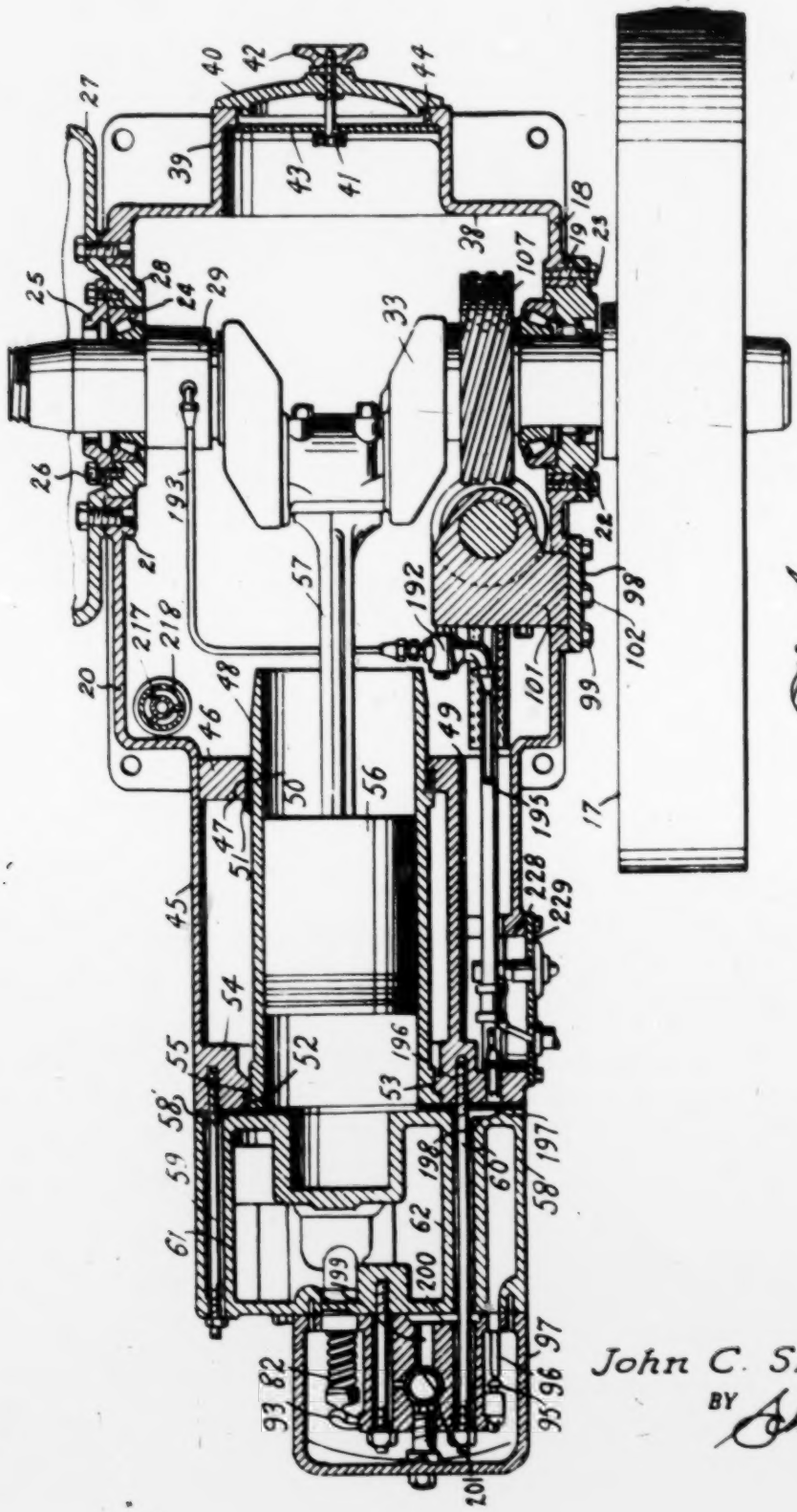

Fig. 4

INVENTOR.
John C. Slonneger
BY Ashley & Ashley
ATTORNEYS

March 25, 1952 J. C. SLONNEGER 2,590,134

INTERNAL-COMBUSTION ENGINE

Filed March 14, 1946 7 Sheets-Sheet 4

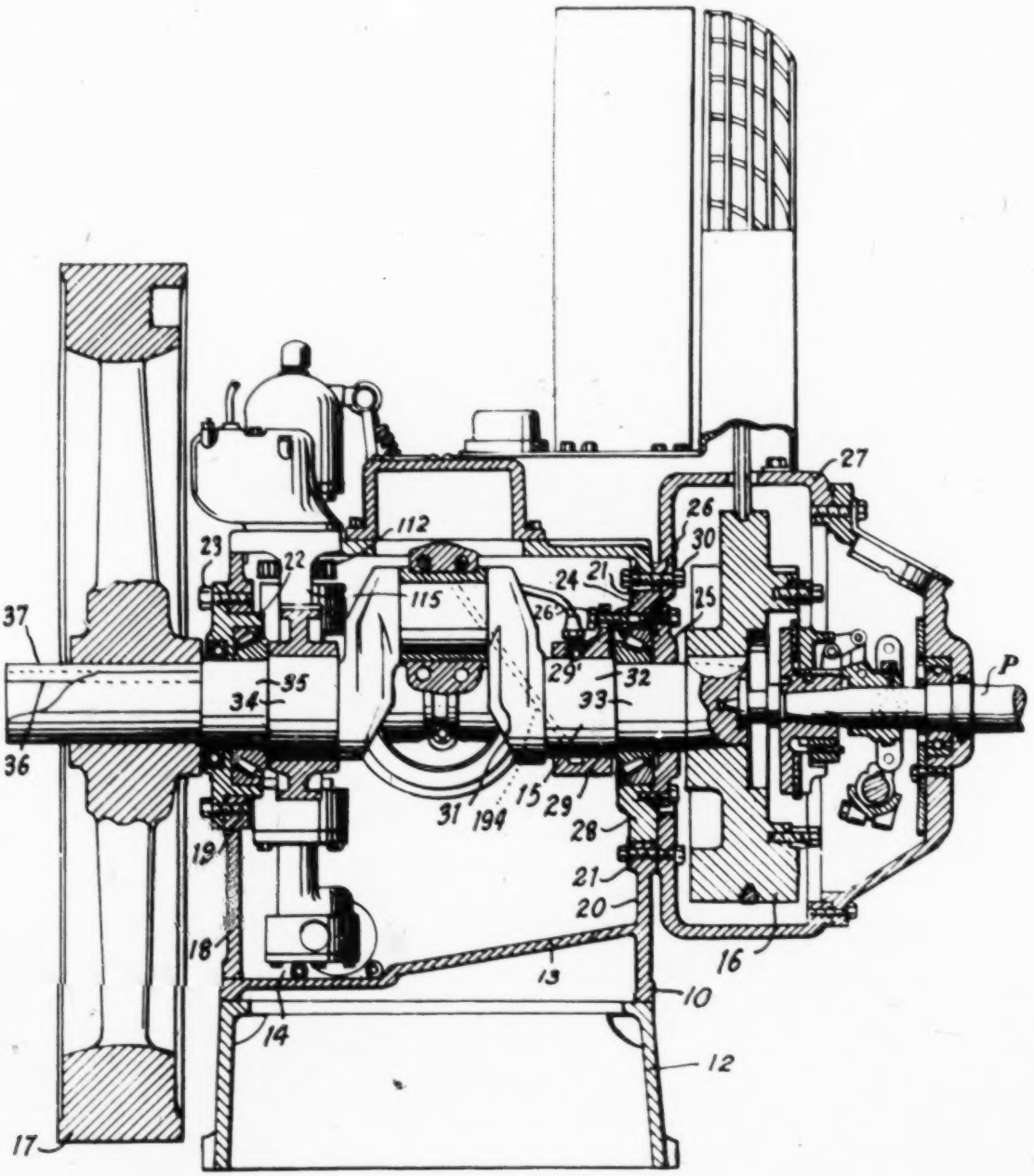

Fig. 5

INVENTOR.
John C. Slonneger
BY Ashley & Ashley
ATTORNEYS

March 25, 1952 J. C. SLONNEGER 2,590,134

INTERNAL-COMBUSTION ENGINE

Filed March 14, 1946 7 Sheets-Sheet 5

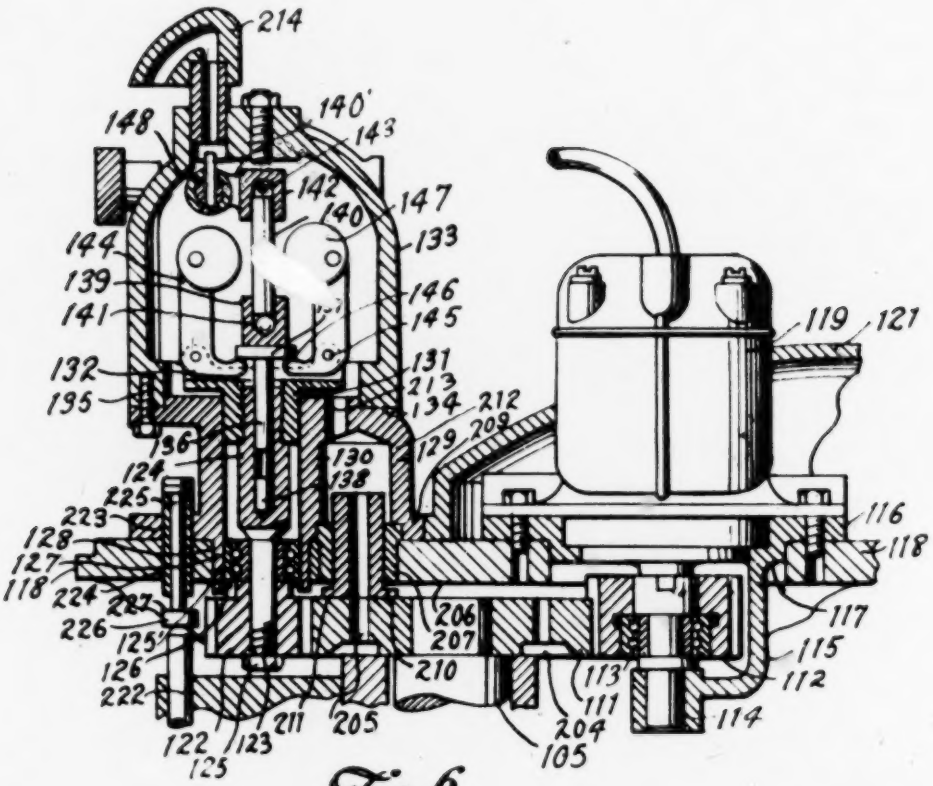

Fig. 6

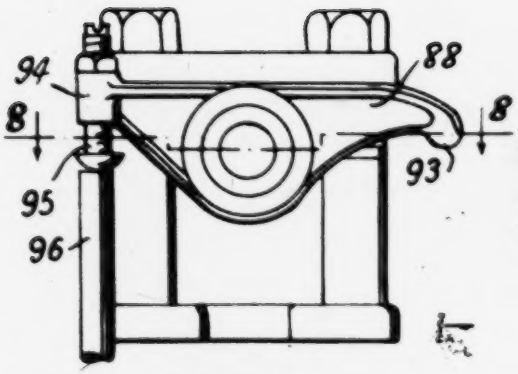

Fig. 7

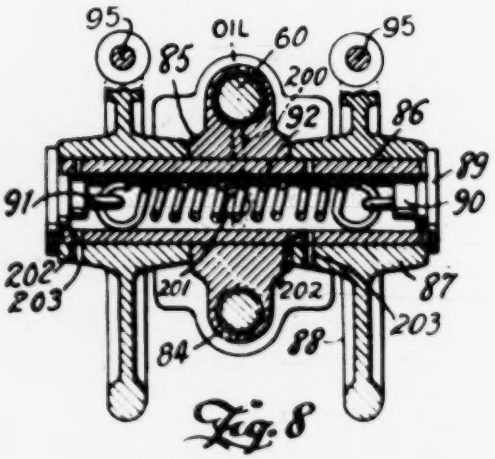

Fig. 8

INVENTOR.
John C. Slonneger
BY Ashley & Ashley
ATTORNEYS

March 25, 1952 J. C. SLONNEGER 2,590,134

INTERNAL-COMBUSTION ENGINE

Filed March 14, 1946 7 Sheets-Sheet 6

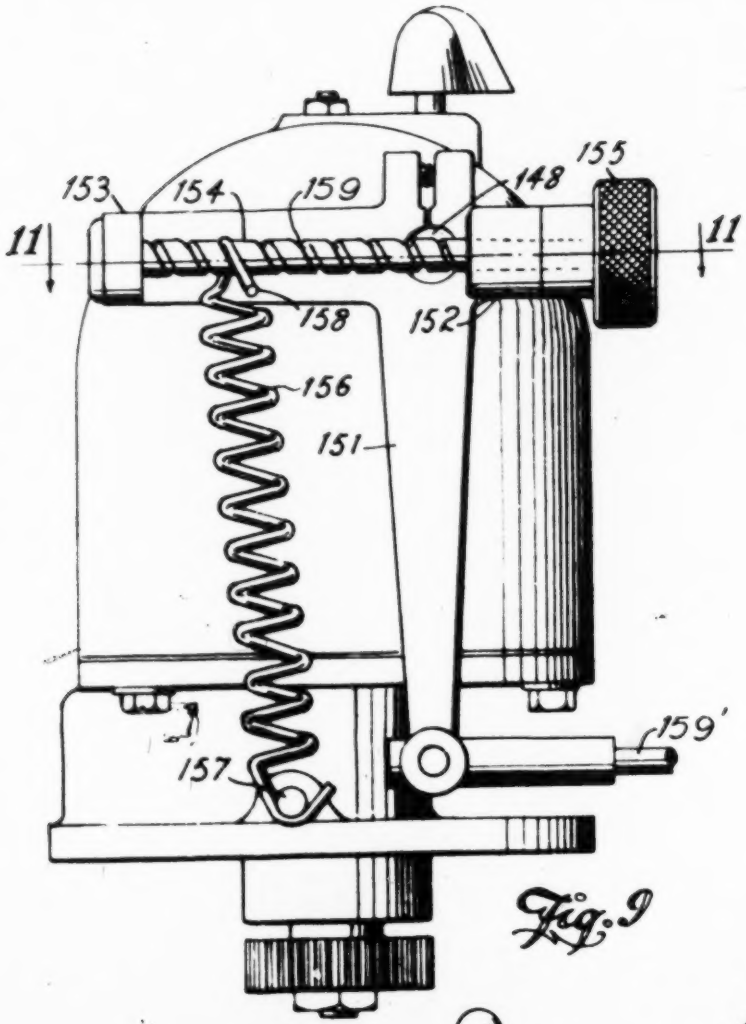

Fig. 9

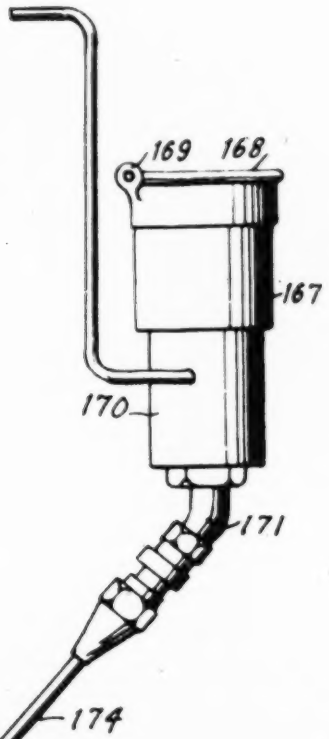

Fig. 10

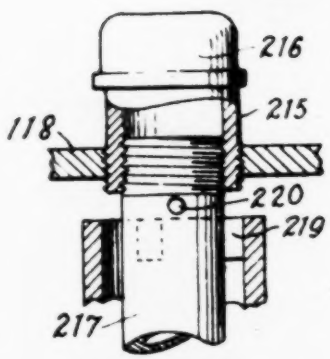

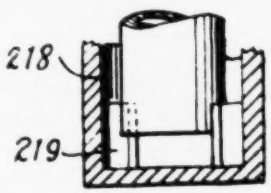

Fig. 12

INVENTOR.
John C. Slonneger
BY Ashley & Ashley
ATTORNEYS

March 25, 1952 J. C. SLONNEGER 2,590,134

INTERNAL-COMBUSTION ENGINE

Filed March 14, 1946 7 Sheets-Sheet 7

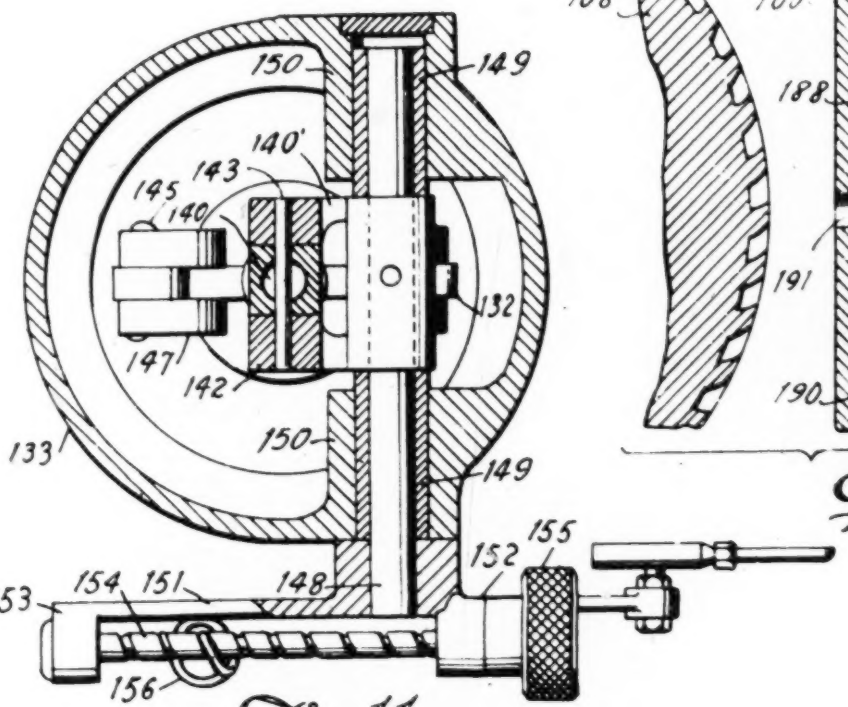

Fig. 11

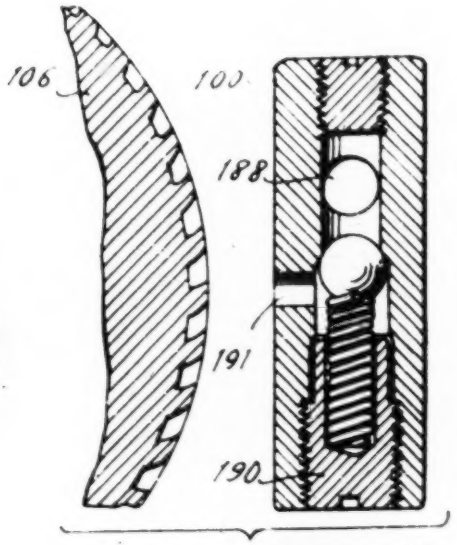

Fig. 16

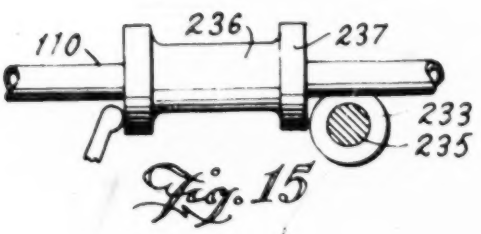

Fig. 15

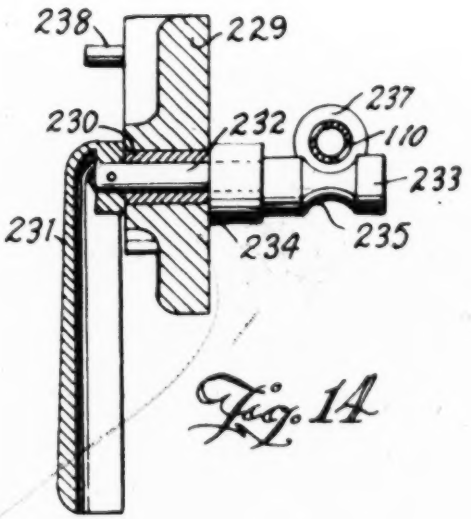

Fig. 14

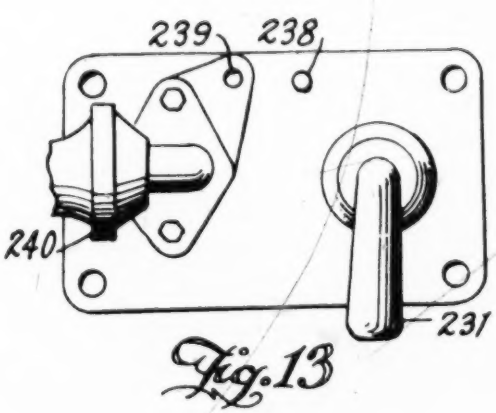

Fig. 13

INVENTOR.
John C. Slonneger
BY Ahley & Ahley

ATTORNEYS

Patented Mar. 25, 1952

2,590,134

UNITED STATES PATENT OFFICE

2,590,134

INTERNAL-COMBUSTION ENGINE

John C. Sionneger, Dallas, Tex., assignor to The Continental Supply Company, Dallas, Tex., a corporation of Delaware

Application March 14, 1946, Serial No. 654,427

13 Claims. (Cl. 123—195)

1

This invention relates to new and useful improvements in internal combustion engines.

One object of the invention is to provide an improved engine of the single cylinder type which among other uses is particularly adapted for driving pumping equipment and which possesses features making for longevity and low maintenance.

Another object of the invention is to provide an improved engine wherein the various elements are arranged for simple and ready installation as well as for accessibility.

A further object of the invention is to combine in the engine a simple and efficient lubricating system which not only assures adequate lubrication of the various moving parts, but which reduces to a minimum the number of pipes and couplings; as well as providing a simple and positive means of ascertaining the oil pressure without the use of delicate gauge mechanism.

Still another object of the invention is to provide an engine having improved means for relieving compression to make for easy and ready starting.

A further object of the invention is to provide an improved engine having a governor which maintains a steady throttle, which will produce substantially uniform power strokes and whereby, variations in speed of the engine cause the flywheel to store and give up energy at the right time and substantially at the exact moment and in the required amounts for smooth and satisfactory operation, means being included in the engine for lubricating the governor in a new and novel manner.

Another object of the invention is to provide an engine having an improved governor which is quickly and readily adjusted accurately without tools to any desired speed within its range which is very wide, said governor having substantially the same sensitivity throughout its range and being constructed so as to eliminate trouble caused by dirt and extraneous matter entering the adjusting mechanism.

A still further object of the invention is to provide an engine having improved lubricating oil filler means which effectively seals the crankcase and yet allows the ready addition of lubricating oil while the engine is running or while it is idle, said engine incorporating means for venting the crankcase at proper intervals in the cycle of operation and for preventing loss of lubricating oil through said venting means.

Yet another object of the invention is to provide an engine wherein simple and effective

2

means are furnished for determining the water level in the cooling jacket of the engine while the engine is running or idle, said means allowing the addition of water at any desirable time and providing for the automatic disposal of excessive quantities of water whereby priming of the radiator is eliminated.

A further object of the invention is to provide an engine having an improved oil collecting ring for the crankshaft which is full-floating and substantially free from wear and oil leakages caused thereby.

A construction designed to carry out the invention will be hereinafter described together with other features of the invention.

The invention will be more readily understood from a reading of the following specification and by reference to the accompanying drawings, wherein an example of the invention is shown, and wherein:

Fig. 1 is a side elevation of an engine constructed in accordance with the invention,

Fig. 2 is an isometrical view of the same, taken from the side opposite to that shown in Fig. 1,

Fig. 3 is a longitudinal sectional view of the engine,

Fig. 4 is a horizontal cross-sectional view of the same,

Fig. 5 is a transverse sectional view taken through the vertical plane of the crankshaft,

Fig. 6 is a transverse sectional view of the governor and magneto mounting,

Fig. 7 is a detail of one of the rocker arms and the mounting therefor,

Fig. 8 is a horizontal cross-sectional view taken on the line 8—8 of Fig. 7,

Fig. 9 is an enlarged side elevation of the governor showing the regulating means,

Fig. 10 is an enlarged side elevation of the water filling assembly,

Fig. 11 is a horizontal cross-sectional view taken on the line 11—11 of Fig. 9,

Fig. 12 is a view partly in elevation and partly in section of the oil filler assembly,

Fig. 13 is an elevation of the fuel pump mounting plate, showing the compression releasing lever,

Fig. 14 is an enlarged vertical, sectional view showing the position of the lever with respect to the intake valve push rod,

Fig. 15 is a partial view in elevation of the spool secured on the intake push rod for engagement by the lever, and

Fig. 16 is a horizontal, cross-sectional view of

the center portion of the camshaft block, showing the oil pressure relief valve.

In the drawings, the numeral 10 designates a hollow crankcase which is provided with external horizontal lugs 11 at its corners whereby the crankcase may be bolted upon a hollow base 12 or secured upon any other support. The crankcase, as is best shown in Figs. 3 and 5, is provided with a false bottom 13 which inclines toward a sump 14 at one side thereof. The crankcase has a crankshaft 15 extending transversely therethrough and connected at one end with a clutch designated generally at 16 on the clutch side of the engine or crankcase. A power take-off shaft P is suitably connected into the clutch mechanism. A flywheel 17 is mounted on the opposite end of the crankshaft on the flywheel side of the engine or crankcase. Flywheels on this type of engines are usually provided with comparatively heavy rims so as to aid in maintaining momentum.

While the crankshaft may be suitably mounted in the crankcase, I prefer to form the wall 18, which is on the flywheel side, with an integral annular collar 19 and to provide the opposite wall 20, which is on the clutch side, with an integral annular collar 21. Although the crankshaft 15 is supported in axially alined bearings, and the collars 19 and 21 are axially alined, they are of different diameters. A roller bearing assembly 22 is secured in the collar 19 by bolts 23.

The clutch 16 includes a cylindrical hollow casing 27. This casing is formed on the inner side of its medial portion with an outwardly offset annular hollow boss 28 which is inserted in the collar 21, and a roller bearing assembly 24 is mounted in this boss. The bearing assembly 24 is confined within the boss by a retaining ring 25 secured on the outer side of the boss by tie bolts 26. An annular lubricant collector 29 is secured against the inner end of the boss in the crankcase by a stud bolt 26' which engages a perforate ear 29' formed on one side of the collector. It will be noted that the opening in the ear 29' is oversize and the head of the bolt 26' does not engage the face of said ear. Thus, the collector 29 is loosely held against rotation only, and is free to move with the crankshaft which it encircles. This structure protects the collector against lateral thrust of the crankshaft which might be caused by wear or misadjustment of the bearing assembly 24, and thereby prevents wear of the collector with the consequent leakage of lubricant. The only load which can be placed on the collector is that represented by its own weight, which is small.

The clutch case 27 is secured to the collar 21 by bolts 30. The crankshaft 15 is provided with the usual crank 31 at its medial portion and is stepped on each side thereof to provide annular bearing faces 32, 33 and 35, respectively, and an annular gear-mounting face 34 on the flywheel side, between the crank and the face 35. The face 32 has a turning fit in the collector 29 while the face 33 is supported in the bearing assembly 24 and extends through the ring 25. The face 35 is supported in the roller bearing assembly 22. Outwardly of the face 35, the end of the crankshaft is provided with a key seat 36 receiving a key 37 whereby the flywheel is secured on said shaft.

The outer end wall 38 of the crankcase is provided with an outwardly-extending annular sleeve 39 which forms a hand-way. A dished cover 40 is attached to the outer end of the sleeve by means of a central bolt 41 and hand nut 42. The head of the bolt is secured in a bar 43 which has either end engaging an annular shoulder 44 within the sleeve, whereby the cover is removably fastened on the crankcase opposite the crankshaft.

The inner end of the crankcase is extended to form a cooling jacket 45 which is considerably less in cross-sectional area than the crankcase proper. Near its inner end, the jacket is formed with an internally transverse web 46 which has a cylindrical opening 47 for snugly receiving one end of a piston cylinder or liner 48. The opening 47 is counterbored at 49 to receive a packing ring 50 which snugly embraces the cylinder. The inner end of the cylinder projects slightly into the crankcase as is best shown in Figs. 3 and 4. The cylinder is formed with an annular bead 51 which engages the packing ring 50 and forces it into the counterbore 49 as well as holding it in place. The outer end of the cylinder is provided with an external annular flange 52 and an annular boss 53 extending inwardly from said flange and of less diameter than said flange. At the outer end of the jacket, an annular abutment 54 is formed in the jacket 45 and provided with an annular internal seat 55 complementary to the flange and boss to snugly receive the same. The parts which have been described support the cylinder in proper position to receive a piston 56 connected to the crank 31 by means of a suitable connecting rod 57. The cylinder is removable and may be withdrawn from the jacket for any purpose.

This engine is of the valve-in-head type and, therefore, a cylinder head 58 is mounted on the outer end of the jacket 45 and secured to the abutment 54 by stud bolts 59 and 60. It will be observed that the outer faces of the abutment and cylinder are flush and the inner face of the head is likewise flush so that a head gasket 58' may be secured therebetween to form a fluid-tight joint. The head 58 is generally hollow and provided with passages and ducts, which will be hereinafter described. The bolts 59 and 60 extend loosely through sleeves 61 and 62, respectively, within the head and made integral therewith. The head 58 is cast with a vertical intake duct 63 in its upper portion and a vertical exhaust duct 64 in its lower portion. These ducts are spaced from the vertical walls of the head so as to provide a circulating space 65 therearound, as is common in this art, and this space communicates with ports 66 in the abutment 54 through ports 67 in the face of the head. A coolant supplied to the jacket 45, may thus circulate through the head. The inner ends of the ducts 63 and 64 are made integral with a valve block indicated generally by the numeral 68. The inner ends of the ducts merge into inwardly-directed elbows or passages 69 and 70 (Fig. 3). These passages communicate with an annular cylinder chamber 71 formed integral with the head 58 and alined with the cylinder 48.

The valve block 68 is formed with transverse counterbored openings 72 at the inner ends of the ducts for receiving flanged bushings 73 for valve stems 75 and 76 respectively. An intake valve 77 fastened on the inner end of the stem 75 engages an annular seat 78 at the inner end of the passage 69; while an exhaust valve head 79 engages an insert seat 80 countersunk in the inner end of the passage 70. The valve 77 controls the intake of fuel to the cylinder; while the valve 80 controls the exhaust from the cylinder. The outer

ends of the valve stems carry collars 81 and coil springs 82 are confined between these collars and the bushings in the usual manner; such springs being under sufficient tension to hold the valves on their seats.

A split rocker bracket 83 is removably secured on the outer end of the head 58 and held in place by the bolt 60 which passes through one side thereof and at its opposite side, by a bolt 84 (Fig. 4) which is screwed into the head. This bracket is formed with an integral and enlarged bearing collar 85 through which a tubular rocker shaft 86 extends. The shaft is clamped in the collar and on each side of the collar the hubs 87 of a pair of rocker arms 88 are rotatably mounted, as shown in Figs. 7 and 8. These arms are retained on the shaft by cap plugs 89 bearing against the ends of the shaft and having stepped shanks 90 which carry hooks 91 connected with the ends of a coiled springs 92, which latter acts to hold the caps in engagement with the ends of the tubular shaft.

Each rocker arm carries a curved rocker 93 at one end and an integral tappet sleeve 94 at its opposite end. The rockers 93 engage the upper ends of the valve stems 78 and 78 in the usual manner for depressing the same, and this particular structure is not an essential part of the invention. In each tappet sleeve, a tappet pin 95 of the usual construction is adjustably mounted for operation by push rods 96. A cover housing 97 is removably mounted on the head for enclosing the rocker mechanism.

One of the important features of the invention resides in the camshaft and lubricating unit which is mounted in the crankcase and includes a hanger block 100. This block is disposed vertically on the flywheel side and attached to a cover plate 98 secured on the vertical wall of the casing by bolts 99, whereby an opening 101 is left in the side wall. The inner face of the plate 98 is machined to provide a proper mounting for the block 100, and the obtaining of such a mounting is the reason for utilizing the mode of structure, the machining of an interior wall of the crankcase being undesirable. The block is attached to the cover plate by bolts 102. At each end of the block, solid bearing boxes 103 are fastened by bolts 104. A camshaft 105 is journaled in these boxes and a pinion 106 fastened on the medial portion thereof. This pinion is driven by a gear 107 fastened on the face 35 of the crankshaft 15. The gear and pinion are of the spiral type and are disposed in planes at right angles to each other.

On each side of the pinion and between the boxes, cams 108 are provided and the throws of these cams are disposed in the proper angular adjustment for actuating valve lifters 109 attached to the push rods 96 which extend through the jacket 45 and engage the tappets 95 on the ends of the rocker arms 88 and thus, when the crankshaft is revolved, rotation is imparted to the gear 107 and pinion 106, whereby the camshaft is rotated and the rocker arms 88 are actuated to alternately depress the inlet and exhaust valves.

The camshaft 105 extends from the upper end of the block and has fastened thereon a gear 111. This gear drives a magneto pinion 112 as is shown in Fig. 6. The pinion 112 is disposed horizontally and mounted on a ball bearing assembly 113 carried by a shaft 114 supported in a depending bearing bracket 115 which forms part of a magneto base 116 which is bolted in an opening 117 on the top wall 118 of the crankcase. A magneto 119 which may be of any approved construction is secured on this base, and is connected to a suitable spark plug 8 mounted in one wall of the head 58. The top wall 118 of the crankcase is provided with an opening 120 which is closed with a dome-shaped cover 121 to allow proper clearance for the throw of the crankshaft.

Diametrically opposite the pinion 112, the gear 111 meshes with a governor pinion 122. This pinion is fastened on the reduced shank 123 of a tubular governor shaft 124 by means of a nut 125. At the intersection of the shank and the tubular portion of the governor shaft, a horizontal ball bearing assembly 126' is provided for rotatably supporting said shaft. The bearing assembly is mounted in a collar 127 and held in place by a retaining ring 126. The collar fits in a circular opening 128 formed in the top plate 118 of the crankcase and depends from the bottom of a governor base 129 which is bolted on said top plate. The governor shaft is enclosed within a sleeve 130 formed at one side of the base and integral therewith. The upper end of the shaft is reduced and has fastened thereon a bearing collar 131 which rotates in the upper end of the sleeve and extends thereabove. A transverse grooved bracket 132 is made integral with the upper end of the collar.

A dome-shaped governor housing 133 is secured in an annular recess 134 in the top of the housing by means of bolts 135. The shaft 124 terminates below the upper end of the collar 131 and receives a vertically slideable plunger 136. This plunger carries a thrust disk 137 on its upper end. The lower end of the plunger carries a piston 138 which has a loose sliding fit in the bore of the tubular governor shaft. The piston operates in an oil bath which lubricates the plunger and damps its action. A cylindrical cup 139 is mounted axially of the plunger on the disk 137 and receives the lower end of a detent 140 which rests upon a ball 141 in said cup. The upper end of the detent engages in an inverted cup 142.

Since the governor shaft 124 is rotatable, the collar 131 and the bracket 132 are likewise rotatable; the bracket rotating in the lower portion of the governor housing and the plunger 136 being slideable therethrough. Angular governor arms 144 are mounted in the grooved ends of the bracket on pins 145 and have inwardly-directed fingers 146 which engage between the disk 137 and the bottom of the bracket. Weights 147 disposed on the upper ends of the arms overhang the fingers and tend to swing the arms toward the detent 140. The governor arms work in the usual manner, whereby the weights are displaced outwardly as the speed of rotation increases, whereby the plunger 136 is elevated which carries the cup 139 and the detent 140 upwardly.

The upper cup 142 is pivoted by a pin 143 to an arm 143' formed on one side of an operating shaft 148 which is journaled in bearing sleeves 149 extending through bosses 150 in the upper portion of the housing 133. The operating shaft extends through one side of the housing and has clamped thereon a crank arm 151. This crank arm has spaced ears 152 and 153 at its upper horizontal end in which a spiral shaft 154 is journaled. A knurled knob 155 is fastened on one end of the shaft for rotating the same. A coiled spring 156 has its lower end engaged over a stud 157 on the exterior of the governor base 129. The upper end of the spring is formed into a hook 158 which is engaged in the spiral groove 159 of the shaft 154.

It will be observed that when the governor shaft 124 is revolved and the arms 144 displaced outwardly, the disk 137 will be lifted, and consequently the detent 140 and cup 142 will swing the arm 143' whereby the operating shaft 148 will be rocked which, in turn, will rock the crank arm 151. By this arrangement, the amplitude of the swing of the long leg of the crank will be controlled by the centrifugal action of the governor. Further, it will be seen that the tension of the spring 156 exerts a downward pull or force not only upon the crank, but upon the plunger 136 through the elements connected therebetween. The pull of the spring 156 is reflected in leverage determined by the spacing of the hook 158 from the shaft 148 on which the crank is fastened. If the knob 155 is turned to move the hook 158 closer to the shaft 148, this leverage is reduced, but if the rotation of the shaft is reversed to move the spring hook outwardly, then the leverage is increased; also as the hook 158 is moved outwardly on the shaft, the spring will be adjusted at an increasing angle to the perpendicular, and therefore, its tension will be increased. The lower end of the crank 151 is pivotally connected to a throttle rod 159' which is suitably attached to the throttle of a carburetor 160 mounted on the cylinder head and connected with the intake passage 63 in the usual manner. The carburetor may be of any desirable type and structure.

The forces exerted by the centrifugal action of the governor and the extension of the spring 156 seek a balance. An increase in speed will raise the plunger 136 and if this occurs suddenly, a partial vacuum will be produced below the piston 138 because of the comparatively slow by-passing of the oil balance confined in the governor shaft. This vacuum, of course, slightly retards the action of the governor and momentary slight overspeeding may result. If the increase in speed is maintained, the plunger will be further elevated as the oil completely fills the bore below the piston and thus relieves the force of the partial vacuum of the plunger. Now if the speed should be suddenly decreased, the plunger can move downwardly only as rapidly as the unbalanced force acting downward causes the piston to by-pass the oil trapped thereunder. By controlling the clearance between the piston and the bore of the governor shaft, the rate at which the oil by-passes is regulated and thus, upon the downward motion of the plunger, a greater retarding or damping action may be obtained than during the upward motion thereof. It is, of course, understood that the governor is so connected to the throttle of the carburetor that an upward motion of the plunger 136 causes the throttle to move toward a closed position and upon a downward movement of the plunger, to move toward an open position. In view of the foregoing, it is pointed out that because of the damping or retarding action, the throttle may be closed quickly, thereby preventing the engine from overspeeding, but the throttle cannot be opened as rapidly. In all speed changes, the piston 138 exerts a damping action to steady the speed of the engine.

Where the engine is used with a comparatively rapidly fluctuating load, as for instance where an oil well pump is being driven, the damping action has the effect of producing substantially no movement of the throttle valve, since the governor assumes substantially an average position due to the fact that the governor does not react to momentary speed changes, as will be obvious from the foregoing description. Should the average load be definitely changed, the spring and governor weights will slowly assume a new average position to maintain balance, but it is pointed out that if the change of load or speed is of short duration, there may be substantially no change in the position of the throttle. In ordinary governors, the mechanism is so constructed that a sudden reduction in speed will cause the governor weights to collapse, which will result in a sudden opening of the throttle. However, the damping action herein described avoids this condition and the throttle will open in a comparatively even and steady manner. It is pointed out that the sensitivity of the governor is not impaired by this oil damper. On the contrary, the arrangement of the spiral shaft 154 and spring 156 provides for very accurate adjustment as to speed which the governor will maintain under rapidly fluctuating loads.

The knob 155 provides a convenient means for adjusting the governor for predetermined speeds and such adjustment provides for a very broad speed range. As has been before pointed out, this is due to the leverage effect of the spring 156 on the crank 151. By this arrangement, a wide range of speed adjustments may be accomplished and the sensitivity proportionately maintained.

To provide for cooling the engine, a flat tank 161 is secured on the jacket 46 by means of bolts 162. In the upper side of the jacket, an opening 163 registers with an opening 164 in the bottom of the tank, and thus a coolant such as water is supplied to the jacket and may flow therefrom through the openings 66 and 67 into the cylinder head 58 wherein it may circulate through the passages 65. A suitable vented radiator 165 is mounted on the tank and provided with a fan (not shown) enclosed in a guard 166 for drawing air through the radiator and cooling the same. The details of the cooling system are not essential to the engine, except as herein pointed out.

In the horizontal type of engine, steam or vapor cooling readily adaptable. However, one of the difficulties has been the determination and maintenance of a proper water level in the system. If the water level is too high, a boiling turbulence will cause the water to be thrown into the radiator tubings and result in priming. Too low a level will cause overheating. The agitation of the water renders the ordinary means of determining the true water level unreliable. The common practice has been to determine the water level after the engine has been stopped and boiling has ceased. Obviously, it is unsatisfactory and impractical to stop the engine to check the water level.

To overcome this difficulty, I attach to the outside of the tank 161 (Fig. 2) a cup 167 having a loose fitting lid 168 which while held closed by a spring hinge 169, is nevertheless nonsealing. The cup has a reduced depending tubular portion 170 into the bottom of which a 45° elbow 171 is fastened. An elbow 172 is screwed into the side of the jacket 46 on substantially the plane of the transverse axis of the engine piston 56 which is substantially the medial portion of said jacket. A U-shaped tube 173 is suitably connected with the elbow 172 and the upper end of the tube is merged into an extension 174 which is suitably connected with the elbow 171. It is obvious that the water level in the jacket 46

will be the same as the water level in the tubes 173, 174 and the cup 187 since both the radiator and the cup are vented to the atmosphere. The cup is of such length that its lower end corresponds to the minimum level of the water in the jacket which is deemed safe for operation, while the top of the cup is at such an elevation that it corresponds to the highest water level that may be maintained without causing objectionable surging of the steam or vapors in the radiator tubes.

It will be apparent that so long as water appears in the cup, the engine may be safely operated so far as its cooling is concerned. An abnormal rise in the water level due to expansion or displacement by steam above the level of the top of the cup or by the addition of excessive amounts of water to the cooling system will cause the water to overflow the cup since the lid 188 is not sealed. Because of the inertia of the column of water in the tube 173, variations in pressure due to the turbulence of boiling will not cause objectionable movement of water in the cup. One purpose of forming the tube in a U-shape is to prevent thermosyphonic circulation of the water between the jacket and the cup. Since water is a comparatively low conductor of heat, such water as remains in the cup will be comparatively cool, thus preventing water loss by excessive evaporation or the loss of antifreeze solution when the same is used. Water may be added by pouring the same into the cup when the engine is running or when the engine is idle. The cup and the radiator being vented to the atmosphere, the vapor pressure in the cooling system never exceeds that of the atmosphere.

The lubricating system of this engine is designed and constructed to be as efficient and yet as simple as possible, with a minimum of oil lines and feeders, the basic parts of the engine being utilized to conduct the lubricating oil rather than separate pipes. The lower end of the camshaft 106 is extended and connected to a suitable oil pump 176 positioned near the bottom of the crankcase and having its inlet pipe 176 arranged to pick up lubricating oil from the sump 14. A suitable screen or filter 177 which may be of any desirable type, has a sliding fit over the inlet pipe 176 and engages a gasket 178 disposed at the inner end thereof. The filter, of course, serves to prevent dirt and foreign matter from entering the pump 176 and the balance of the lubricating system. To allow ready servicing and replacement of the filter 177, an opening 179 is formed in the vertical wall of the crankcase adjacent the end of the filter, and is adapted to be closed by a plate 180 held by suitable machine screws 181. A gasket 182 seals the joint between the plate 180 and the crankcase wall. The plate is provided with a centrally-located boss 183 on its inner face and a stud bolt 184 is secured therein. The bolt 184 has a close sliding fit within an opening in the outer end of the filter and has a nut secured to its inner end whereby the filter is slideably secured to the plate 180. A coiled spring 185 is compressed between the plate and the filter so that when the plate is in place, the filter is urged inwardly into engagement with the gasket 178. Obviously, removal of the plate 180 allows the quick and easy removal of the filter through the opening 179 for cleaning or replacement.

The pressure outlet 186 of the oil pump 176 is connected by a pipe 187 to the lower end of an axial oil passage 188 formed in the block 100. Lateral passages 189 communicate with the passage 188 and direct lubricating oil onto the bearing surfaces of the camshaft 106. An oil relief valve 190 is mounted in the medial portion of the block 100 so as to communicate with the passage 188. The valve 190 is of the usual adjustable spring-loaded type and discharges through an opening 191 directed through the block 100 toward the pinion 108 secured on the camshaft. Thus, oil passing through the valve is caused to flow upon the pinion 108 and thereby lubricate this pinion and the gear 107 disposed on the crankshaft.

An oil outlet fitting 192 is mounted in the upper end of the block 100 and has connected in one side thereof an oil pipe 193 extending through the crankcase to the oil collector ring or collar 28. The face 32 is provided with an opening 194 which extends through the crankshaft in the usual manner to provide lubrication for the connecting rod bearing and the bearing face 36. If desired, oil may also be conducted to the wrist-pin bearing of the connecting rod.

A second oil pipe 195 extends outwardly from the fitting 192 and connects into an opening 196 formed in the abutment 84 and registering with a similar opening 197 in the gasket 86'. A milled groove 198 extends laterally of the sleeve 82 so as to communicate with the opening 197, whereby lubricating oil may flow from the pipe 195 through the openings 196 and 197 and the groove 198 to the annular space around the bolt 90, and thus to the outer end of the head 88. The gasket 86' effectively seals this connection.

It is pointed out, that the sleeve 82 is surrounded by the water jacket wherein a temperature approaching 212° F. exists. Thus, the sleeve acts as a heat exchanger to warm the oil flowing therethrough and thereby maintain a higher oil temperature throughout the lubricating system. In engines of this type, and especially in colder climates, this result is desirable since oil temperatures usually are too low for efficient lubrication.

The bracket 83 is formed with a passage 199 extending inwardly from the bore of the collar 85, and a groove 200 communicating between the upper end of the collar 82 and the passage 199 to lubricate said bore. The tubular rocker shaft 86 is provided with central radial openings 201, whereby oil under pressure may enter the bore of said shaft and be conducted thence to openings 202 formed in each end of the shaft. Ports 203, similar to the openings 202, are formed in the hubs 87 of the rocker arms 88, and are so positioned as to register with the openings 202 when the valves 77 and 78 are in open positions. The ports 203 are so directed as to throw a stream of oil on the exposed portions of the valve stems whereby efficient lubrication is maintained. Thus, intermittent lubrication of the valve stems, and continuous lubrication of the rocker arms and the rocker arm shaft is assured.

It is pointed out, that this lubricating system for the valve and rocker arms does not require the use of separate oil lines which are subject to damage and leakage, and possibly may be incorrectly connected by a person working on the engine, or not connected at all. The oil lines form an integral part of the rocker bracket and the cylinder head and are removed and replaced when these elements are.

The crankcase is vented in a manner which prevents loss of oil by breathing and at the same time lubricates the governor mechanism. The venting structure is best shown in Fig. 6 of the

drawings. The gear 111 fastened on the upper end of the camshaft 105 is formed with a concentric groove 204 in its lower face and diametrically-opposed openings 205 extending upwardly therefrom through the gear. Obviously, the openings 205 are in communication at all times with the crankcase. An opening 203 is provided in the top wall 118 of the crankcase immediately above one side of the circular path traveled by the openings 205 so as to alternately register with said openings as the gear 111 rotates.

A bushing 207 has a close fit in the opening 206. The bushing carries an annular flange 208 on its upper end so as to support the bushing within the opening and engages within a recess 209 formed in the lower face of the governor base 126, whereby the bushing is securely held. A nipple 210 rests upon the upper face of the gear 111 and rides within the bushing, the lower end of the nipple being flanged to prevent its upward displacement through the bushing. Normally, there is space between the flange and the bushing, the close fit between the latter and the nipple preventing leaks therebetween. An enlarged chamber 212 is formed in the base 126 above the recess 209 and a port 213 communicates between the chamber and the interior of the governor housing 189. The upper end of the governor housing is vented to the atmosphere through a suitable vent cap 214.

As the engine is operating, the movement of the piston within the cylinder will cause a variation in volume and a consequent variation in pressure within the crankcase. As the gear 111 rotates, the openings 205 will come into alternate register with the nipple 210 and thus vent to atmosphere through the governor housing. As air, with entrained oil, passes through the nipple and enters the enlarged chamber 212, and again as it enters the enlarged interior of the governor housing, its velocity is reduced and the oil flung out against the wall of the governor housing by the governor weights so as to return to the crankcase via the space around the shaft 124 and the nipple. This oil serves to lubricate the governor mechanism, and to some extent to replenish the oil within the oil damper of the governor.

The openings 205 are so spaced on the gear 111 as to register with the nipple 210 when the piston is at bottom dead center. The total opening and closing period represents about 30° of crankshaft rotation so that during the major portion of a cycle the vent is closed, and the crankcase is under partial vacuum whereby the return of oil from the governor housing is aided.

A special assembly is utilized for adding lubricating oil to the crankcase. This assembly is shown in Fig. 12, and is positioned vertically in one corner of the crankcase as is shown in Fig. 4. The assembly comprises a collar 215 secured in the top wall 118 of the crankcase and adapted to be closed by a suitable cap 216. An elongate nipple 217 extends downwardly from the collar, while a sleeve 218, having its lower end closed, telescopes the nipple 217 and has its open upper end disposed a short distance below the top wall 118. Spacers 219 are positioned in the annular space between the nipple and the sleeve at the top and bottom thereof, and being welded or otherwise suitably secured to both elements, serve to secure them together as well as space their sidewalls.

Lubricating oil, upon introduction into the collar 215, flows downwardly through the nipple and then, as additional oil is added, upwardly through the annular space between the nipple and the sleeve 218 until it overflows the upper end of the sleeve and enters the crankcase. The oil will flow thus until the head in the nipple equals the head in the sleeve. Oil will remain in the annular space so that an oil seal is established which effectively seals the crankcase and allows the addition of oil while the engine is running or while it is idle. The turbulence and splashing of oil, normal in the crankcase of an engine in operation, is not communicated to the oil filler pipe so that oil may be readily added, and air may not be drawn into the crankcase because of the oil seal.

It has been found that in actual operation at a fairly uniform speed, the oil columns within the nipple and sleeve tend to fluctuate due to variable pressures within the crankcase, and such fluctuations reach amplitudes at times sufficient to splash most of the oil into the crankcase whereby the oil seal is lost. To prevent this occurrence, a small hole 220 is formed in the wall of the nipple 217 above the upper end of the sleeve 218 so that pressure equalization may take place. The hole 220 is small so that air breathed into the crankcase is kept at a minimum.

An improved means for determining oil pressure has been provided. The upper end of the block 100 is formed with an upwardly-extending passage 221 communicating with the passage 188, and counterbored to receive a cylindrical plunger 222, which has a sliding fit within the counterbore. Since the oil pressure exerted by the oil pump is directed against the lower end of the plunger, the plunger will react to such pressure to move longitudinally within the counterbore. A bushing 223 is secured within an opening 224 formed directly above the plunger in the top wall 118 of the crankcase and the flanged base 126 of the governor unit. A feeler rod 225 has a sliding fit within the bushing and is provided with flanged caps 226 at either end to retain the rod within said bushing. The lower cap is adapted to be engaged by the plunger 222 so as to move the rod upwardly as the plunger moves thus. A packing ring 227 is confined on the inner side of each of the caps 226 so as to seal the space between the rod 225 and the bushing 224 when the rod is in its upper or lower position.

When the engine is in operation, the pressure exerted by the oil pump forces the plunger 222 and thus the rod 225 upwardly. Manual pressing down of the feeler rod must overcome this pressure, and thus will indicate to the operator the amount of oil pressure being developed. This pressure gauge is reasonably accurate, and is almost entirely free from susceptibility to damage due to accidents or vibration or rough treatment. An ordinary pressure gauge is not protected from this damage, and on engines which have been in use for some time, may usually be found to be broken or damaged, or so lacking in accuracy as to be useless.

Thus, an entire lubrication system is provided which is simple, trouble-free and wherein means are provided to safeguard against normal mistakes and rough treatment caused by operating personnel. In this connection, it is pointed out that the connection of the camshaft 105 directly to the oil pump 175 substantially eliminates the possibility of an oil system failure independent of a general engine failure. So long as the camshaft operates, the oil pump will be driven, and should the camshaft fail, the engine would stop. So damage due to oil system failures are minimized.

It has been the practice heretofore to provide

some means in hand-cranked engines for relieving the cylinder head pressure due to compression during cranking. These means usually consist of a mechanism for holding the exhaust valve open until sufficient flywheel speed is attained to carry the engine through one or two cycles. The objection to this method is that it fills the cylinder with air, which of course, must be flushed out by a burnable mixture after the valve is released and an effort made to start the engine.

I prefer to relieve compression by holding the intake valve open so that the cylinder is filled with a burnable mixture during the initial cranking period and more efficient starting is obtained.

To accomplish this desirable result, an opening 228 is provided in the flywheel side of the jacket 46 in the portion of the jacket through which the push rods operate, and is adapted to be closed by a cover plate 229. An opening 230 is formed in the inner end of the plate. A suitable handle 231 has an integral shank 232 projecting through the opening and carrying an eccentrically mounted pin 233 on its inner end. A collar 234 is pressed or otherwise secured upon the pin adjacent the inner face of the plate 229 so that outward movement of the handle and pin assembly is prevented. The pin is adapted to engage the inner end of a spool 236 secured to the intake valve push rod 96, and is formed with an annular groove 235, semi-circular in cross-section, intermediate its ends, said groove being of sufficient depth as to allow proper clearance for the push rod. The spool 236 is cylindrical and carries annular flanges 237 at either end.

When the handle 231 is in its downward position, as shown in Fig. 14, the pin 233, due to its eccentric mounting, is in a lowered position and not in contact with the spool 236. The groove 235 provides clearance sufficient for the reciprocating movement of the push rod 96 normal during engine operation. The spool is so positioned as to clear the pin during such movement. However, in starting the engine, counter-clockwise movement of the handle will cause the pin to move upwardly into engagement with the spool and outwardly so as to force the push rod outwardly thereby actuating the rocker arm 88 and opening the intake valve 77. To hold the handle in this position, it is allowed to swing a little past top dead center so as to rest against a pin 238 projecting outwardly from the plate 229. A slight toggle action is achieved in this manner, whereby return of the handle to its downward position is prevented until such movement is accompliahed manually. Of course, after sufficient cranking speed is attained, the handle is swung downwardly to allow normal starting of the engine.

The plate 229 carries an opening and a mounting 239 at its outer end for receiving a fuel pump 240 which may be of any desirable type, although a diaphragm pump is normally used on this type of engine. The pump may, of course, include a fuel filter 241. The actuating lever 242 of the pump projects through the opening in the plate 229 into the interior of the jacket 46 and is engaged by the outer flange 237 of the spool 236 secured to the intake valve push rod. Thus, reciprocation of the push rod imparts motion to the lever 242 to actuate the fuel pump during operation of the engine.

The foregoing description of the invention is explanatory thereof and various changes in the size, shape and materials, as well as in the details of the illustrated construction may be made, within the scope of the appended claims, without departing from the spirit of the invention.

What I claim and desire to secure by Letters Patent is:

1. An internal combustion engine including, a crankcase, a crankshaft mounted in the crankcase, a cylinder extending from the case having a piston therein connected with the crankshaft, said crankcase having an opening in one side wall, a plate secured over the opening, a hanger block secured and supported upon the portion of the plate exposed through the opening, and a camshaft rotatably carried by the block and rotatably connected with the crankshaft.

2. An internal combustion engine as set forth in claim 1, wherein the camshaft extends substantially vertically within the crankcase, and an oil pump connected directly to the lower end of the camshaft.

3. An internal combustion engine as set forth in claim 2, wherein the hanger block is provided with a longitudinal oil passage leading from the pump, and an excessive oil pressure relief valve carried by the hanger and commuunicating with the oil passage thereof, the relief valve having its discharge adjacent to and directed at the camshaft.

4. An internal combustion engine as set forth in claim 1, wherein the outer surface of the crankcase adjacent the opening is machined smooth, and the inner face of the plate is machined smooth to provide an accurate surface upon which the hanger block is secured and supported.

5. An internal combustion engine including, a crankcase, a crankshaft mounted in the crankcase, a cylinder extending from the case having a piston therein connected with the crankshaft, said crankcase having an opening in one side wall, a plate secured over the opening, a hanger block secured upon the portion of the plate exposed through the opening, spaced bearings carried by the hanger block, a camshaft rotatably mounted in the bearings, a driven gear on the camshaft, and a driving gear on the crankshaft meshing with the driven gear, the hanger block having a longitudinal oil passage and branch oil passages leading from the longitudinal passage to the bearings and the driven gear.

6. An internal combustion engine as set forth in claim 5, and an oil pressure relief valve in the branch passage leading to the driven gear.

7. An internal combustion engine including, a crankcase, a crankshaft mounted in the crankcase, a cylinder extending from the case having a piston therein connected with the crankshaft, a hanger block detachably connected to the wall of the crankcase, a camshaft rotatably carried by the hanger block, a driving connection between the crankshaft and the camshaft, valve lifters carried by the hanger block, the block having a longitudinal oil passage and branch oil passages leading from the longitudinal passage to the driving connection, the valve lifters, and the camshaft for lubricating the same.

8. An internal combustion engine as set forth in claim 7, and an oil pressure relief valve in the branch oil line leading to the driving connection.

9. An internal combustion engine as set forth in claim 8, and an oil pump connected directly to one end of the camshaft with its outlet communicating with the longitudinal oil passage of the hanger block.

10. An internal combustion engine including, a crankcase, a crankshaft mounted in the crank-

case, a cylinder extending from the case having a piston therein connected with the crankshaft, a hanger block detachably connected to the wall of the crankcase, bearings carried by the hanger block, a camshaft rotatably carried by the hanger block bearings, a driving connection between the crankshaft and the camshaft, valve lifters carried in the hanger block, the block having a longitudinal oil passage extending therethrough and branch oil passages leading from the latter to the bearings, means for conducting lubricant from the longitudinal passage to the valve lifters, an oil pump connected to one end of the camshaft with its outlet communicating with the longitudinal oil passage of the hanger block, and an oil pressure relief valve carried by the block in communication with the longitudinal passage and having its discharge adjacent to and directed at the driving connection.

11. An internal combustion engine including, a crankcase, a crankshaft mounted in the crankcase, a cylinder block with a cylinder therein extending from the case, a piston in the cylinder connected with the crankshaft, a cylinder head having a coolant jacket removably secured to the cylinder block, a first oil passage formed integrally with the cylinder head extending through the coolant jacket in heat exchange relationship, a second oil passage formed integrally with the cylinder block and in communication with the first passage for conducting oil thereto, an oil pump in the crankcase, and oil conducting means leading from the oil pump to the second oil passage.

12. An internal combustion engine including, a crankcase, a crankshaft mounted in the crankcase, a cylinder block with a cylinder therein extending from the case, a piston in the cylinder connected with the crankshaft, a cylinder head removably secured to the cylinder block and having a portion abutting said cylinder block, a rocker arm support removably secured to the cylinder head and having a portion abutting said cylinder head, a first oil passage formed integrally with the support and extending from the portion thereof abutting to the cylinder head, a second oil passage formed integrally with the cylinder head and extending from the portion thereof abutted by the rocker arm support to the portion thereof abutting the cylinder block said second oil passage being in communication with the first passage for conducting oil thereto, a third oil passage formed integrally with the cylinder block and extending to the portion thereof abutted by the cylinder head, said third oil passage being in communication with the second passage for conducting oil thereto, an oil pump in the crankcase, and oil conducting means leading from the oil pump to the third oil passage.

13. A horizontal internal combustion engine including, a crankcase, a crankshaft mounted horizontally across the crankcase, a cylinder extending horizontally from the case having a piston therein connected with the crankshaft, a cylinder head removably secured upon the cylinder, valves in the cylinder head, a rocker arm support removably secured upon the cylinder head, rocker arms carried by the support and engaging the valves, push rods engaging the rocker arms and extending parallel to the cylinder, a hanger block in the crankcase, a vertical camshaft rotatably carried by the hanger block having valve lifter cams thereon, valve lifters carried by the hanger block and engaging the cams and the push rods, an oil pump connected directly to the lower end of the camshaft, a governor geared to the upper end of the camshaft, a magneto geared to the upper end of the camshaft, a driving gear on the crankshaft, and a driven gear on the camshaft meshing with said driving gear.

JOHN C. SLONNEGER.

REFERENCES CITED

The following references are of record in the file of this patent:

UNITED STATES PATENTS

Number	Name	Date
977,885	Laviolette	Dec. 6, 1910
1,161,225	Koken et al.	Nov. 23, 1915
1,178,586	Lapointe	Apr. 11, 1916
1,254,780	Davison	Jan. 29, 1918
1,338,722	Fekete	May 4, 1920
1,430,524	Kettering	Sept. 26, 1922
1,459,563	Thamm	June 19, 1923
1,549,339	Van Balkom	Aug. 11, 1925
1,554,350	Jack	Sept. 20, 1925
1,626,364	Starr	Apr. 26, 1927
1,627,761	Woolson	May 10, 1927
1,731,623	McCuen	Oct. 15, 1929
1,743,586	Wiltse	Jan. 14, 1930
1,801,953	Caminez	Apr. 21, 1931
1,874,489	Frederick	Aug. 30, 1932
1,900,968	Woolson	Mar. 14, 1933
1,915,283	Bechman	June 27, 1933
2,000,635	Edwards	May 7, 1935
2,137,482	Gil	Nov. 22, 1938
2,201,525	Fedden et al.	May 21, 1940
2,226,596	Swenson	Dec. 31, 1940
2,288,831	O'Harrow	July 7, 1942

FOREIGN PATENTS

Number	Country	Date
106,964	Great Britain	June 4, 1919

Aug. 5, 1952 A. M. MADLE 2,605,753

CURRENT GENERATING DEVICE

Filed June 7, 1951 4 Sheets-Sheet 1

Fig. 1.

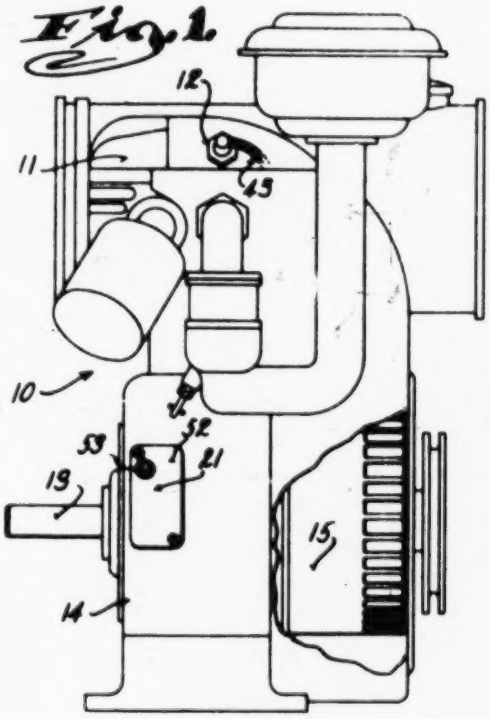

Fig. 2.

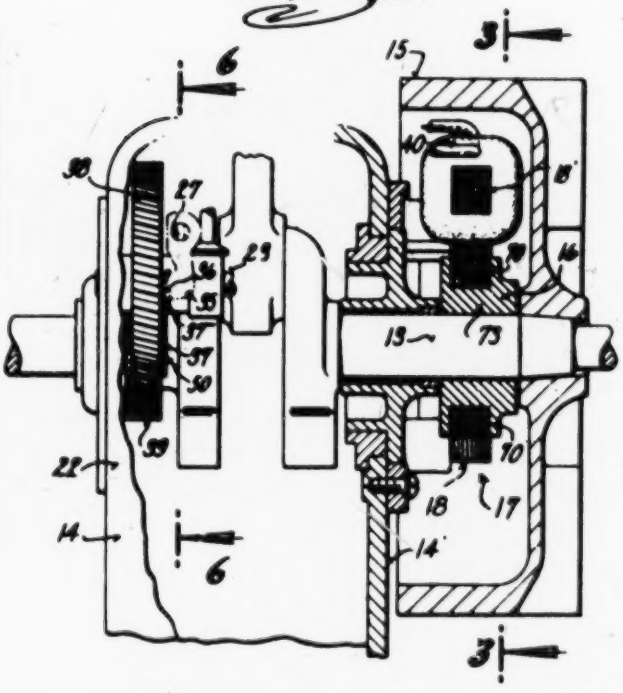

Fig. 4.

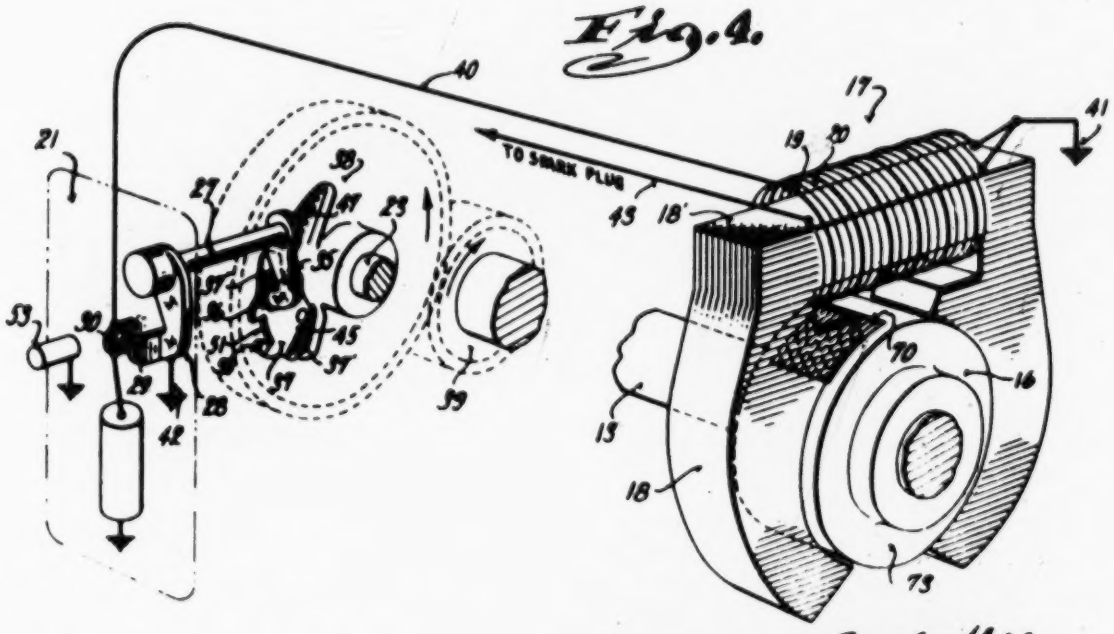

Inventor
Alain M. Madle, DECEASED
Dorothy H. Madle, ADMINISTRATRIX
By Smith-Jones
Attorneys

Aug. 5, 1952 A. M. MADLE 2,605,753

CURRENT GENERATING DEVICE

Filed June 7, 1951 4 Sheets-Sheet 2

Fig. 3.

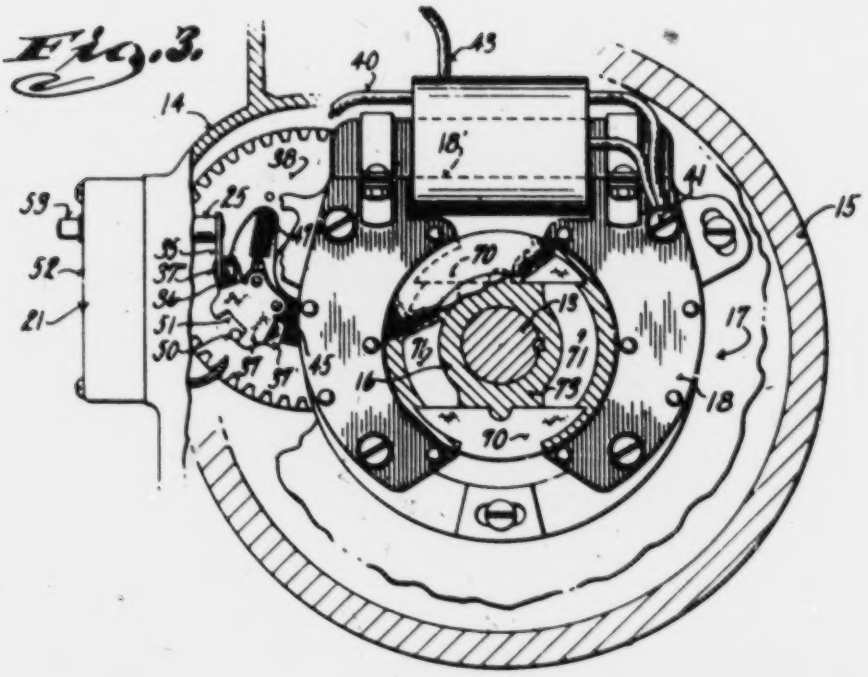

Fig. 5.

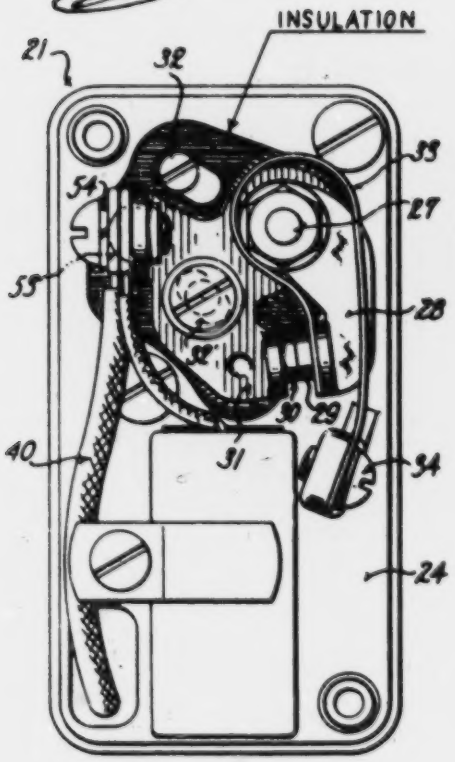

Fig. 6.

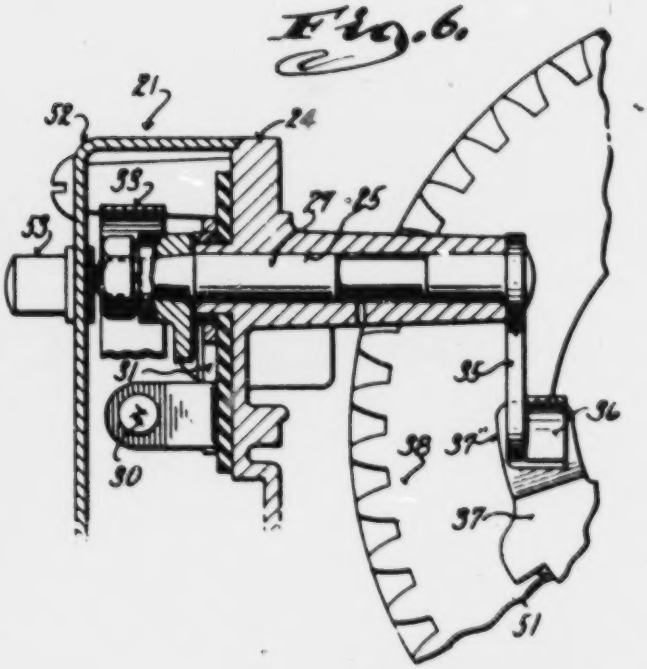

Inventor
Alain M. Madle, DECEASED
Dorothy H. Madle, ADMINISTRATRIX
By Ira Milton Jones
Attorney

Aug. 5, 1952 A. M. MADLE 2,605,753

CURRENT GENERATING DEVICE

Filed June 7, 1951 4 Sheets-Sheet 3

Fig. 1.

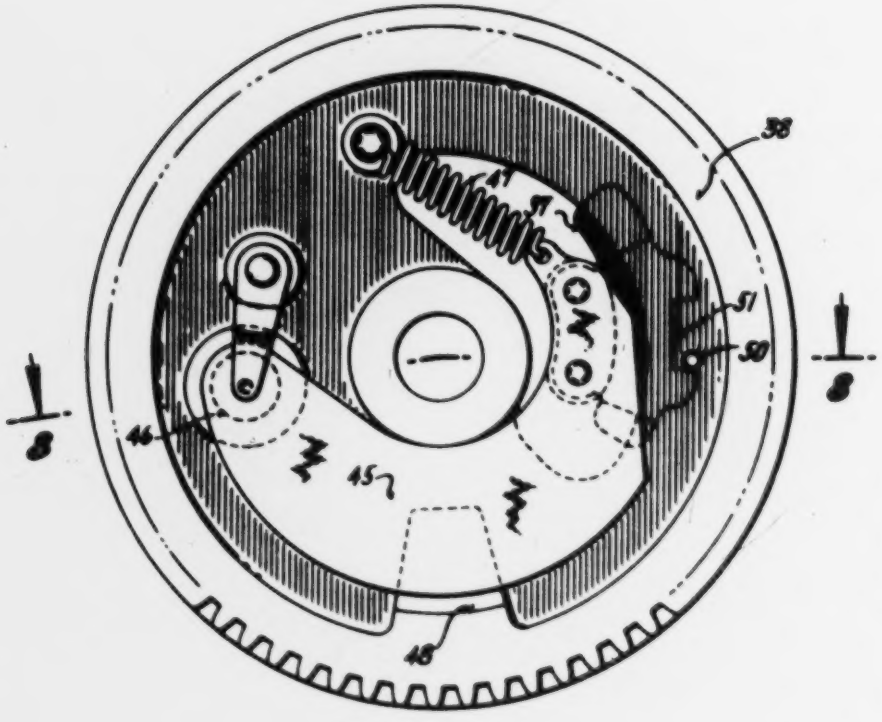

Fig. 8.

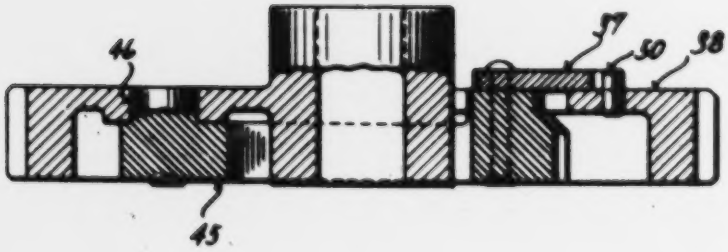

Executrix
Alain M. Madle, DECEASED
Dorothy H. Madle, ADMINISTRATRIX
by
Attorney

Aug. 5, 1952 A. M. MADLE 2,605,753

CURRENT GENERATING DEVICE

Filed June 7, 1951 4 Sheets-Sheet 4

Fig. 9.

CRANKING SPEED

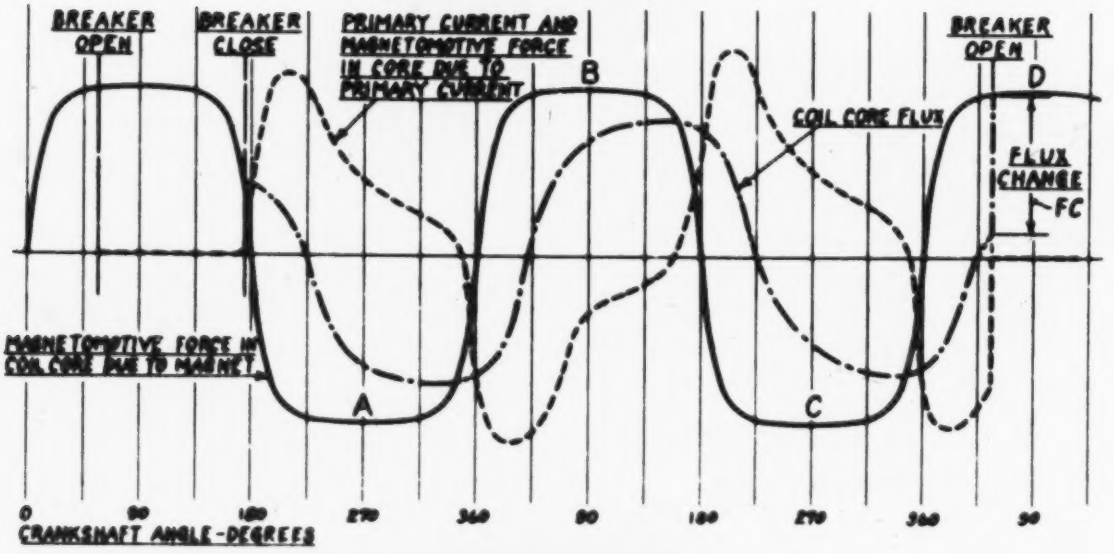

Fig. 10.

RUNNING SPEED

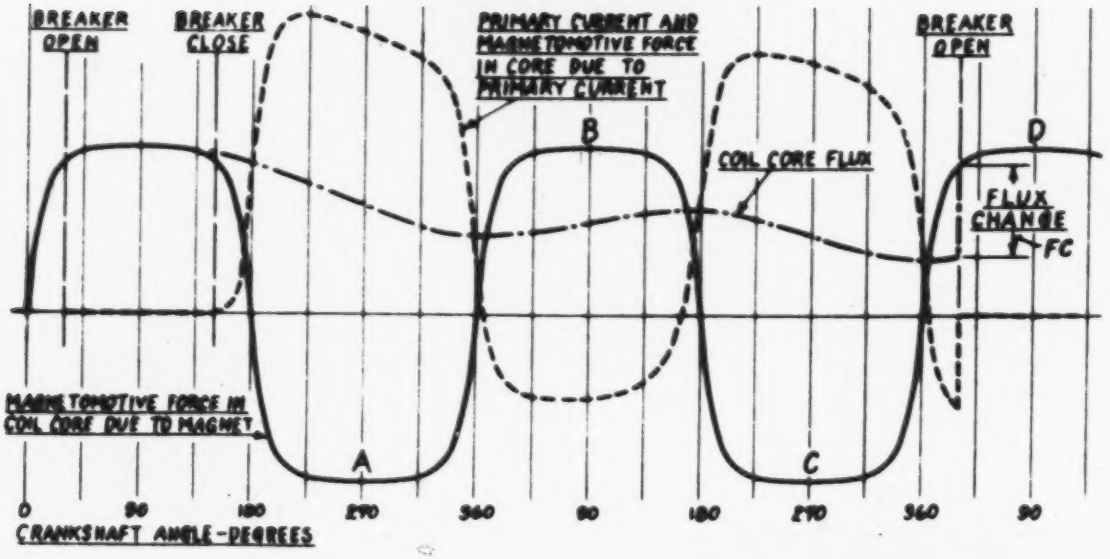

Inventor
Alain M. Madle, DECEASED
Dorothy H. Madle, ADMINISTRATRIX
By
Attorney

Patented Aug. 5, 1952

2,605,753

UNITED STATES PATENT OFFICE

2,605,753

CURRENT GENERATING DEVICE

Alain M. Madlé, deceased, late of Milwaukee, Wis., by Dorothy H. Madlé, administratrix, Milwaukee, Wis., assignor to Briggs & Stratton Corporation, Milwaukee, Wis., a corporation of Delaware

Application June 7, 1951, Serial No. 230,296

19 Claims. (Cl. 123—149)

1

This invention has reference to current generating devices and is a continuation-in-part of the copending application of Alain M. Madle, deceased, Serial No. 108,293, filed August 3, 1949, which in turn was a continuation-in-part of application Serial No. 653,493, filed March 11, 1946, both of which applications are now abandoned.

More specifically this invention concerns the provision of an improved current generating system for internal combustion engines and especially single cylinder four stroke cycle engines of the so-called portable type.

The conventional crankshaft driven magneto while capable of performing its intended function of generating a suitable high E. M. F. for spark plug operation leaves much to be desired when used on small one cylinder high speed, high compression internal combustion engines.

Such magnetos usually have their magnets mounted on the flywheel to rotate with the engine crankshaft, and the crankshaft is provided with a cam for effecting separation of breaker contacts stationarily mounted on a wall of the engine covered by the flywheel.

Hence, the whole magneto assembly together with the breaker contacts for controlling firing of the spark plug is located alongside one wall of the engine and within the hollow interior of the flywheel. Access to any of the generator parts and especially the breaker contacts for adjustment or replacement thereof is thus either extremely difficult, or impossible, without considerable disassembly of the parts including the removal of the flywheel from the crankshaft.

Another disadvantage of the conventional crankshaft driven magneto when used with single cylinder engines wherein no distributor for the spark is required, resides in the fact that the breaker contacts are separated once each revolution of the crankshaft and thus effect firing of the spark plug twice during each four strokes of the engine, whereas only one spark is wanted for each four strokes, i. e., one spark for each two revolutions of the crankshaft.

The unwanted spark occurs at the top of the exhaust stroke of the piston and while it does not actually interfere with the operation of the engine, it shortens the life of the spark plug. Separation of the breaker contacts which produces this unwanted spark likewise results in unnecessary wear on the breaker contacts.

While the problem of the breaker produced unwanted spark may be solved by using a conventional cam shaft driven self-contained magneto, there are serious complications involved in

2

the installation and driving of such a magneto on relatively small engines of the type here under consideration. Consequently the use of such cam shaft driven magnetos in small single cylinder engines is hardly practical. In any event the conventional cam shaft driven magneto is of doubtful value as a solution to the problem. Moreover, it is desirable that the magneto be driven by the engine crankshaft so as to obtain the advantage of the higher speed of rotation of the crankshaft for the production of suitably high firing voltages in the magneto.

Conventional two pole flywheel magnetos for high speed, high compression single cylinder engines having no distributor and wherein the breaker contacts are separated once each revolution of the crankshaft have another more serious disadvantage, namely the production of non-breaker produced sparks that occur while the breaker contacts are separated. These non-breaker produced sparks result from a change in coil core flux due solely to rotation of the rotor. In the most common type of bi-pole magneto wherein the poles on the rotor and stator are, respectively, diametrically opposite one another and symmetrical these unwanted non-breaker produced sparks that take place while the breaker contacts are separated tend to occur twice at equal time intervals each two revolutions of the engine crankshaft so that with the unwanted breaker produced spark which occurs near the top of the exhaust stroke the possibility exists of having three unwanted sparks during each cycle of the engine, once during each explosion and intake stroke and again near the top of each exhaust stroke; and above certain engine speeds all three of these unwanted sparks will occur.

While the cause of these unwanted sparks no doubt is understood by those skilled in the art, it may be helpful to point out that in each instance, i. e. breaker produced as well as non-breaker produced, the sparks result from rapid flux changes in the coil core. The curve of the magnetomotive force in the coil core due to the permanent magnet as a function of the movement of the rotor in a well designed magneto has an alternating substantially trapezoidal shape. The abrupt reversals in the curve, of course, correspond to the rapid flux changes in the coil core. The breaker produced sparks occur approximately at the end of every other reversal; and the non-breaker produced sparks occur just before the middle of the reversal since the maximum voltage occurs at the center of the reversal where the rate of change of the flux is

greatest. Thus, since the wanted spark, which of course is breaker produced, should occur about twenty degrees of engine rotation ahead of the piston top dead center at the end of the compression stroke, the position of the rotor with respect to engine rotation is such that the unwanted other breaker produced spark occurs just before the piston reaches the top of the exhaust stroke and the two unwanted non-breaker produced sparks occur during the latter half of the explosion and intake strokes.

The occurrence of unwanted sparks while the breaker contacts are separated depends upon the comparative values of the spark gap breakdown voltage and the voltage induced in the secondary winding. This breakdown voltage is relatively low during the intake and exhaust strokes because of the low pressure existing in the combustion chamber at these times and can, therefore, be easily exceeded by the induced voltage in the coil.

While these non-breaker produced sparks have a lower peak voltage than breaker produced sparks they are nevertheless highly objectionable. The prolonged nature of the unwanted non-breaker produced sparks in high speed engines coupled with the fact that breaker operation each revolution of the engine produces two more sparks each cycle of the engine causes excessive firing of the spark plug and overheating and corrosion of its electrodes; and the overheating results in preignition of the combustible mixture charged into the engine cylinder and loss of power developed by the engine.

As far as is known, little has been done to eliminate the unwanted spark resulting from breaker contact operation at the top of the exhaust stroke in engines equipped with crankshaft driven magnetos, but attempts have been made to minimize the undesirable effects of non-breaker produced sparks. The use of special "cold" plugs, and masking of the plug electrodes are two of the expedients resorted to in the past to offset these maverick sparks.

Masking is usually accomplished by a special cylinder head construction wherein the spark plug electrodes are located in the bottom of a well or recess having more or less limited communication with the cylinder. Thus, the weak but prolonged non-breaker produced maverick sparks across the electrodes can be prevented from causing preignition by the fact that the electrodes are masked by burnt gases from previous cycles. Special "cold" plugs are employed chiefly because of their ability to better withstand heat, and do not necessarily eliminate preignition.

But the control of non-breaker produced sparks by masking entails a special cylinder head construction and removes the spark plug electrodes from their most effective position within the cylinder. Moreover, it does not eliminate overheating of the spark plug electrodes which condition manifests itself in shorter spark plug life.

The main objection to these expedients which have been employed in the past to control maverick sparks, however, is that they deal not with the cause but the effect of the disturbing condition.

With the foregoing objections in mind, it is one of the main objects of this invention to provide a crankshaft operated magneto for single cylinder four cycle internal combustion engines having breaker contacts controlled by an engine

shaft rotating at one-half crankshaft speed so as to eliminate the unwanted breaker produced spark which would occur at the top of the exhaust stroke of the engine if the breaker operated at crankshaft speed.

Thus it will be noted that while the magneto rotor is driven at a speed suitably high for efficient operation, breaker contact separation takes place only once for each two revolutions of the engine crankshaft, i. e. once each engine cycle, at the proper time required to ignite the compressed mixture in the engine cylinder.

Another object of this invention resides in the provision of a magneto for single cylinder high speed, high compression engines wherein unwanted non-breaker produced or maverick sparks are eliminated.

In this respect it is another object of this invention to provide a magneto for single cylinder high speed, high compression internal combustion engines wherein objectionable maverick sparks are eliminated by the particular manner in which circuit breaker operation is effected. Thus by eliminating the cause there is no need for special structural provisions in the combustion chamber to prevent preignition.

A further object of this invention resides in the provision of a magneto for high speed, high compression engines wherein unwanted non-breaker produced or maverick sparks are eliminated, and wherein novel automatic spark advancing and retarding mechanism is employed.

Another object of this invention resides in the provision of a magneto for single cylinder internal combustion engines wherein the breaker contacts are located substantially remote from the flywheel and on the exterior of the engine crankcase so as to be readily accessible for adjustment or replacement.

With the above and other objects in view which will appear as the description proceeds, this invention resides in the novel construction, combination and arrangement of parts substantially as hereinafter described, and more particularly defined by the appended claims, it being understood that such changes in the precise embodiment of the hereindisclosed invention may be made as come within the scope of the claims.

The accompanying drawings illustrate one complete example of the physical embodiment of the invention constructed in accordance with the best mode so far devised for the practical application of the principles thereof, and in which:

Figure 1 is a side elevational view of an internal combustion engine equipped with the current generating system of this invention;

Figure 2 is an enlarged detail view partially in section of a portion of the engine shown in Figure 1;

Figure 3 is a cross sectional view taken on the plane of the line 3—3 of Figure 2, with the rotor of the magneto in a position at which its poles bridge the gaps between the poles of the stator and with the breaker cam in spark retarded position and having just allowed the breaker contacts to close,

Figure 4 is a diagrammatic view illustrating the essential elements of the magneto and the manner in which the breaker contacts control firing of the spark plug, the rotor of the magneto in this view being shown in a position partially bridging the gap between the stator poles, and the breaker cam in spark retarded position and shortly about to allow closure of the breaker contacts;

Figure 5 is a front view of the breaker box with its cover removed;

Figure 6 is a fragmentary sectional view taken on the plane of the line 6—6 of Figure 2;

Figure 7 is a view of the cam shaft gear illustrating the automatic spark advancing means;

Figure 8 is a cross sectional view taken on the plane of the line 8—8 of Figure 7;

Figure 9 is a diagram illustrating the magnetomotive force in the coil core due to the rotor magnets and the flux in the coil core and the current in the primary coil throughout a complete engine cycle at cranking speed at which time the spark is retarded; and

Figure 10 is a diagram similar to Figure 9 but showing the magnetomotive force in the coil core due to the rotor magnets and the flux in the coil core and the current in the primary coil at normal running speeds.

Referring now more particularly to the accompanying drawings in which like numerals indicate like parts throughout the several views, the numeral 10 generally designates a single cylinder four stroke cycle internal combustion engine of the small portable type, adapted to be operated at high speeds and having a relatively high compression ratio.

The engine is provided with the customary cylinder 11 and spark plug 12, while the crankshaft 13 projects from one side of the crankcase 14 to mount a flywheel 15 thereon in a more or less conventional manner. The flywheel 15 is of hollow construction, as illustrated, and has its open side facing the adjacent end wall 14' of the crankcase.

Mounted on the crankshaft between the hub of the flywheel and the adjacent end wall 14' of the crankcase is the rotor 16 of a magneto generally designated 17. The rotor 16 is of special construction and forms the subject matter of a companion application, Serial No. 230,295, filed June 7, 1951.

It has two diametrically opposite poles 70 connected by a pair of permanent magnets 71, the poles and magnets being embedded in a non-magnetic hub-like body 73. This body is bored to fit the crankshaft 13 to which it is secured to dispose the rotor within a stator 18 stationarily supported from the wall 14' of the crankcase inside the hollow interior of the flywheel. The stator 18 also has two diametrically opposite poles connected by a coil core 18' upon which the usual primary and secondary windings 19 and 20 respectively are mounted.

To the extent that the rotor of the magneto is driven by the crankshaft and the magneto parts per se are located within the hollow interior of the flywheel, the magneto of this invention follows conventional practice.

As stated previously, it was the custom in the past to support the breaker contacts for controlling spark plug operation on the end wall of the crankcase inside the flywheel, and to actuate the breaker contacts by means of a cam carried by the crankshaft of the engine. This arrangement, however, is objectionable for single cylinder four cycle engines having no distributor because the breaker contacts are then all but inaccessible, and because with that arrangement the breaker contacts were actuated every revolution of the crankshaft and thus produced an unwanted spark at the time the piston reached the top of its exhaust stroke. Such an unwanted spark does not interfere with operation of the engine, but it nevertheless shortens the life of the engine spark plug and causes excessive wear on the breaker contacts.

One of the objects of this invention is achieved by relocating the breaker contact assembly 21 remote from the flywheel and on the exterior of the side wall 22 of the crankcase which is adjacent to the cam shaft 23, where it is readily accessible for adjustment or replacement of the breaker contacts.

As best shown in Figures 5 and 6, the breaker contact assembly 21 is carried by a base plate 24 overlying an aperture (not shown) in the side wall 22 of the engine crankcase. A bearing 25 projecting from the back of the base plate extends into the interior of the crankcase toward the cam shaft 23 and has a stub shaft 27 journalled for oscillatory motion therein.

One end of the stub shaft 27 projects from the front of the base plate 24 to have the movable breaker arm 28 fixed thereon. The outer end of the breaker arm 28 has the movable contact 29 mounted thereon for cooperation with a stationary breaker contact 30.

The stationary contact 30 is carried by an adjustable plate 31 supported from the base plate 24 in a manner such that rotation of an eccentric 32 operates to adjust the position of the stationary contact with respect to the movable contact 29, a clamping screw 32' being provided to secure the plate 31 in adjusted position. A leaf spring 33 having one end anchored to the base plate as at 34 and its opposite end reacting against the movable breaker arm 28 acts to bias the breaker contacts into engagement with one another.

Fixed on the inner end of the stub shaft 27 which projects into the interior of the crankcase is an arm 35 having a cam follower 36 on its outer extremity arranged to be traversed by a breaker cam 37 carried by the cam shaft gear 38. As will be clear from Figure 2, the cam shaft gear is located on the cam shaft 23 near the wall of the crankcase remote from the flywheel and meshes with a pinion 39 on the crankshaft. Since the pinion has one-half the number of teeth of the cam shaft gear, the customary one-to-two ratio obtains between the crankshaft and cam shaft.

Inasmuch as the cam shaft rotates at one-half crankshaft speed, it will be apparent that the cam 37 acting through the arm 35 effects separation of the breaker contacts once each revolution of the cam shaft or once for each two revolutions of the crankshaft. This is highly advantageous in that it eliminates the unwanted spark which occurs in conventional one cylinder engine ignition systems at the top of the exhaust stroke, and thereby achieves another of the objects of this invention.

Referring to the diagram of Figure 4, it will be seen that one end of the primary winding 19 is electrically connected with the stationary contact 30 of the breaker assembly by means of a conductor 40. The opposite end of the primary winding, along with the adjacent end of the secondary winding, is grounded as at 41.

The movable contact 29 of the breaker assembly is also grounded as at 42 so that when the breaker contacts are engaged both ends of the primary winding are grounded and current may flow therein; and since the secondary winding is connected with the spark plug through a conductor 43 separation of the circuit breaker contacts by the cam 37 effects firing of the spark plug.

Attention is directed to the fact that the cam

37 has a relatively short angular length or dwell so as to only momentarily hold the breaker contacts separated. The separation of the contacts, which, as is well known, should be rapid, occurs when the steeply inclined leading end 37' of the cam rides under the cam follower; and upon such separation of the breaker contacts the spark plug fires. The timing of the breaker separation with respect to the engine cycle is, of course, determined by the position of the cam on the cam shaft gear 38; and this position, as will be hereinafter brought out, is automatically adjustable to advance the spark as the engine comes up to speed.

Because of the short angular length of the cam the breaker contacts are allowed to be reclosed by the spring 33 very soon after the plug has fired; but since the closure of the breaker contacts need not be as rapid as the opening and moreover cannot be faster than the action of the breaker spring, the trailing end 37'' of the cam is not as steep as its leading end.

The breaker contacts remain closed for most of the 360 degrees of rotation of the cam shaft 23 to normally maintain the primary winding connected to ground at both ends and in condition to have current flow therein. In other words, the primary winding is part of a closed circuit at all times except during the short interval the breaker contacts are opened to effect firing of the spark plug.

By keeping the breaker contacts normally closed in this manner and having the open period of the contacts take place when there is substantially no change in magnetomotive force in the coil core due to the permanent magnet, non-breaker produced or so-called maverick sparks are prevented. Since there is a substantial difference in the length of the arcuate pole faces of the rotor and stator there is a relatively long interval which occurs four times each engine cycle during which the rotor and stator pole faces overlap or oppose each other and the magneto motive force in the coil core due to the permanent magnet is substantially uniform and, of course, as the rotor pole faces sweep across the gaps between the stator poles this magneto motive force in the coil core due to the permanent magnet reverses abruptly.

As long as the breaker contacts are closed so that current may flow in the primary winding the abrupt changes in magnetomotive force in the coil core due to the permanent magnet during these reversals are incapable of causing maverick sparks because the current flowing in the closed primary circuit produces a magnetomotive force in the coil core in opposition to the magnetomotive force due to the permanent magnet. This bucking current prevents rapid flux changes and consequently precludes the generation of a maverick spark producing E. M. F. directly in the secondary winding.

In Figure 4, which depicts conditions during cranking, the rotor is shown in a position at which its pole faces partially bridge the gaps between the stator poles; and the cam 37 is about to allow the breaker contacts to close. At running speeds, when the cam 37 actuates the breaker contacts sooner in the engine cycle, the reclosure of the contacts takes place at approximately the instant the rotor pole faces begin to move into positions bridging the gaps between the stator poles. But at all speeds the opening of the breaker contacts takes place after the reversal of magnetomotive force in the coil core due to the permanent magnet directly preceding spark time and closes before the next successive reversal.

Reference to Figures 9 and 10 will facilitate an understanding of the manner in which this magneto operates, and since the maverick spark condition to be eliminated exists only at running speeds, attention is particularly directed to Figure 10.

The wave pattern of the magnetomotive force in the coil core due to the permanent magnet, represented by the heavy solid line in Figures 9 and 10 has the relatively flat plateaus shown to depict substantially uniform magnetomotive force because of the difference in the lengths of the rotor and stator pole faces. As already noted, by virtue of this difference the face of each rotor pole is opposite a stator pole face for a substantial angle of rotor rotation, and during this angular interval substantially no change takes place in magnetomotive force in the coil core due to the permanent magnet. Bearing in mind that for maverick sparks to occur requires the concurrence of a change in magnetomotive force in the coil core due to the permanent magnet and an open condition of the primary circuit, it follows that if the breaker contacts are closed during all changes in magnetomotive force in the coil core due to the rotor magnet that maverick sparks will be prevented.

Hence, the breaker cam 37, after opening the breaker contacts to produce the desired spark (at a time when there is no rotor magnet produced change in magnetomotive force) must allow the contacts to reclose before the next change in magnetomotive force due to the rotor magnet. Accordingly the cam 37 must be short enough to assure opening and reclosing of the breaker contacts during the angular interval that the rotor and stator pole faces are substantially opposite one another, but since the breaker mechanism must have time to function it follows that it is essential to have a relatively large difference in the arcuate length of the stator and rotor pole faces.

The sparking voltage is, of course, obtained from the secondary coil in which it is induced by the rapid change in flux in the coil core which occurs when the primary circuit is opened by separation of the breaker contacts. Since the breaker contacts close and open at times when the magnetomotive force due to the magnet is in the same direction no change of flux would occur when the breaker opened if the primary coil and its circuit had zero resistance. Under such a theoretical condition the coil core flux would remain at a constant value for a complete engine cycle which encompasses the four half cycles of of rotor rotation designated A, B, C and D.

However, since the primary circuit has resistance a decaying current, represented by the dotted line in the diagrams, obtains in the primary circuit. Because of this decaying current the coil core flux represented by the dot and dash lines on the diagram also decays, the overall decrease in coil core flux being represented by the dimension FC.

During the half cycle D and directly after the fourth complete reversal of magnetomotive force following closure of the breaker contacts the breaker contacts open and the flux changes abruptly by an amount equal to its net decay.

Since the net flux decay is a function of time, at higher engine speeds the time for decay is less and hence the net flux decay decreases with

increasing engine speeds. This decrease in flux decay results in a decrease in the amount of flux change at the instant of breaker contact opening so that the sparking voltage decreases with increasing engine speed.

Conversely at lower engine speeds the net flux decay is greater as will appear from a comparison of the value FC in the two diagrams Figures 9 and 10. Therefore, at cranking speeds the sparking voltage (which is approximately proportional to the value FC) is greater than at running speeds. This in an important advantage since it enables the attainment of the most desirable speed-voltage characteristic or curve.

Those skilled in the design of magnetos know that the sparking voltage, i. e. the voltage needed to fire the spark plug does not rise with increasing engine speed, but on the contrary drops. With all magnetos heretofore used on single cylinder engines the voltage at the spark plug continues to rise as the engine speed increases so that at normal running speeds it is far in excess of the voltage needed for proper firing. In fact, it is so high that the life of the plugs is far too short for satisfactory service. By contrast the speed-voltage curve of the magneto of this invention rises abruptly during starting speeds to reach maximum long before normal running speeds and then drops so that at running speeds the sparking voltage is actually lower than at starting but still comfortably above minimum requirements. Obviously this reduces the electrical strain upon the spark plug points.

The explanation for this advantage lies in the fact that the breaker points are operated at one-half crankshaft speed and remain uninterruptedly closed for most of the cycle.

In considering the diagrams, Figures 9 and 10, it should be borne in mind that the low speed diagram (Figure 9) is greatly condensed along its time axis so that although there appear to be rapid and abrupt flux changes, actually these changes which are due to the decay of the current are gradual. The important consideration is that no rapid flux changes can occur as long as the breaker contacts are closed and since the magneto is so designed that the breaker contacts are open only when there is no tendency for rotor rotation to rapidly change the flux (which could only occur at running speeds) it follows that all unwanted firing of the spark plug is eliminated.

This invention, therefore, not only eliminates the unwanted spark which is normally produced in one cylinder engines having crankshaft operated breaker contacts, but also eliminates the non-breaker produced sparks which seriously interfered with engine operation in the past; and also provides accessibility to the breaker contacts.

The automatic retarding of the spark referred to hereinbefore is achieved by mounting the breaker cam 37 on the free end of a centrifugally actuated weight 45 having an eccentric pivotal connection 46 with the cam shaft gear. This weight, as best shown in Figures 7 and 8 is carried by the cam shaft gear at the side thereof opposite the breaker cam. A coil spring 47 having one end anchored to the cam shaft gear 38 is attached to the free end of the weight to hold the same in its inner position holding the breaker cam 37 in a "retarded spark" position. As the engine speed increases centrifugal force acting on the weight rotates the same about its pivot 46 toward the surface 48 on the cam shaft gear to angularly shift the breaker cam 37 in the direction of rotation of the cam shaft and thereby advance the spark timing.

Spark advancing and retarding actually is limited, however, by engagement of a pin 50 on the gear 38 with the opposite ends of a notch 51 cut into the side of the breaker cam 37. In the starting position shown in Figures 7 and 8 the spring 47 is shown holding the cam "retarded" with one end of the notch of the breaker cam engaged with the pin 50.

For the sake of appearance and to afford a degree of protection for the breaker contacts the base plate 24 is preferably provided with a detachable cover 52 to close the breaker assembly. This cover carries a stop button 53 at its exterior which when depressed into the cover engages the terminal 54 of the breaker assembly to ground the magneto primary despite the condition of the breaker contacts and to thereby effect stopping of the engine.

From the foregoing description taken in connection with the accompanying drawings, it will be readily apparent to those skilled in the art that this invention provides a highly improved magneto and breaker control therefor which is advantageous from the standpoint that it enables the elimination of all unwanted sparks; that it achieves the ideal speed-voltage characteristic of high voltage at cranking speeds and lower voltage at running speeds; and that it enables the breaker contacts to be placed in a readily accessible location remote from the flywheel.

What is claimed as the invention is:

1. In an ignition system for a single cylinder four cycle internal combustion engine of the type having a crankshaft driven magneto, a crankcase, and a cam shaft geared to said crankshaft to rotate at one-half crankshaft speed; fixed and movable breaker points mounted on the exterior of the crankcase in a position substantially remote from the magneto but readily accessible from the exterior of the engine; a cam follower in juxtaposition to a face of the cam shaft gear; a motion transmitting connection between said cam follower and the movable breaker point; and means for effecting momentary separation of said breaker contacts once each two revolutions of the crankshaft, said means including an arm having one of its ends pivoted to a face of the cam shaft gear eccentrically thereof so as to be bodily movable with the gear, and so that the opposite end of the arm is free for arcuate motion in the plane of the gear face and to advance relative to the periphery of the gear in the direction of rotation of the gear as a result of centrifugal force consequent to rotation of the gear; means yieldingly biasing said arm against such advancing motion; and a cam surface carried by said arm and adapted to cooperate with said cam follower to momentarily separate the breaker points only once during each revolution of the cam shaft.

2. In an ignition system for a single cylinder four cycle internal combustion engine of the type having a crankshaft driven magneto and a cam shaft geared to the crankshaft for rotation therewith at one-half crankshaft speed: a pair of normally engaged breaker contacts; and means for effecting momentary separation of said breaker contacts once each revolution of the cam shaft, said means comprising a part fixed on the cam shaft to rotate therewith, and a cam mounted on said part for motion relative thereto in consequence to centrifugal force, said cam being movable in a direction to effect earlier separation

P-470

of the breaker contacts as the engine approaches normal operating speeds.

3. In an ignition system for a single cylinder four cycle internal combustion engine of the type having a crankshaft driven magneto and a cam shaft geared to the crankshaft for rotation therewith at one-half crankshaft speed: normally closed fixed and movable breaker points; a cam follower connected with the movable breaker point and operable to effect separation thereof from the fixed point; a part fixed on the engine cam shaft to rotate therewith; a cam; and means mounting the cam on said part for momentary engagement with and operation of said cam follower once during each revolution of the cam shaft so as to effect momentary separation of the breaker points during such operation of the cam follower, said means providing for motion of the cam relative to said part in a direction to effect earlier separation of said breaker points in response to increased centrifugal force on said part due to an increase in the rate of rotation of the cam shaft.

4. In an ignition system for a single cylinder four cycle internal combustion engine having a crankshaft driven magneto and fixed and movable breaker points: a wheel rotatably driven from the engine crankshaft at a fixed speed with respect to the crankshaft; an arcuate arm having one of its ends pivotally connected to the wheel at one face thereof to swing about an axis spaced from the center of the wheel in response to centrifugal force during rotation of the wheel, said arm having its free end overlying a slot formed in the side of the wheel substantially diametrically opposite the pivot point of the arm; means for momentarily separating the breaker points once each revolution of said wheel, including a cam disposed at the opposite face of said wheel, and means projecting through said arcuate slot in the wheel to connect the cam with the free end of said arm for motion of the cam with the arm; and a spring reacting between the arm and the wheel to hold the arm with the cam in a position at one end of the slot corresponding to retarded opening of the breaker points, said spring being yieldable in response to centrifugal force on the arm to allow the free end of the arm to carry the cam to the other end of the slot during high speed operation of the engine to effect earlier separation of the breaker points.

5. In an ignition system for a single cylinder four cycle internal combustion engine of the type having a crankshaft driven magneto for effecting spark plug operation: fixed and movable breaker points accessibly mounted on the exterior of the engine remote from the magneto; a cam follower movably supported by the engine remote from the breaker points; a motion transmitting connection between the cam follower and the movable breaker point such that separation of the points is effected by motion of the cam follower in one direction; a rotatable part adjacent to said cam follower; a driving connection between said rotatable part and the engine crankshaft whereby the speed of rotation of the crankshaft determines the speed of rotation of said rotatable part; a member carried by said rotatable part for rotation therewith and for motion relative thereto in response to centrifugal force; and a cam surface on said member engaged by said cam follower for imparting motion to the cam follower in said direction once each revolution of the rotatable part to effect breaker point separation at instants depending upon the speed of crankshaft rotation and the position of said member relative to the rotatable part as determined by the centrifugal force acting on said member.

6. In an ignition system for a single cylinder four stroke cycle internal combustion engine of the type having a crankshaft driven magneto and a cam shaft driven from the crankshaft for rotation therewith at one-half crankshaft speed: a pair of normally engaged breaker contacts; means for effecting momentary separation of said breaker contacts once each revolution of the cam shaft, said means comprising a part fixed on the cam shaft to rotate therewith, a centrifugally responsive breaker cam mounted on said part to rotate therewith and for back and forth motion relative thereto, said cam being movable in one direction relative to said part to effect earlier separation of the breaker contacts in consequence to centrifugal force as the speed of the engine increases; means for limiting back and forth motion of the cam relative to said part so as to define the spark advanced and retarded positions of the cam; and biasing means acting on the cam to yieldingly resist motion thereof in said direction in response to centrifugal force.

7. In an ignition system for an internal combustion engine of the type having a crankshaft driven magneto for effecting spark plug operation, and fixed and movable breaker points actuated by a cam follower for timing the occurence of the spark with respect to the rotational position of the crankshaft, means for automatically varying the timing of breaker point operation in accordance with the rate of rotation of the crankshaft, comprising: a member rotatably driven in one direction from the crankshaft, said member having opposite faces normal to its axis of rotation; an arm overlying one face of said member and extending laterally thereacross to one side of the axis of the member, the ends of the arm being disposed substantially diametrically opposite one another; means pivotally connecting one end of the arm to said member so that the other end of the arm may swing back and forth across said face of the member, said other end of the arm being centrifugally responsive and being adapted to swing relative to said member in the direction in which the member rotates as the speed of the engine increases; a projection on said other end of the arm extending through a slot in said member; a cam on said projection adapted to operatively engage the cam follower once during each revolution of the member, said cam overlying the opposite face of the member so that the member is interposed between said cam and the arm to guide the arm in its swinging motion; and means yieldingly urging the arm to swing counter to the direction of rotation of said member so as to yieldingly resist response of the arm to centrifugal force.

8. In an ignition system for an internal combustion engine having a crankshaft and fixed and movable breaker points operated by a cam actuated follower, means for automatically varying the timing of breaker point operation in accordance with the speed of the engine, comprising: a member rotatably driven in one direction from the crankshaft of the engine, said member having opposite faces normal to its axis of rotation; an arm overlying one face of said member with its ends lying at substantially diametrically opposite sides of the axis of the mem-

ber and its body extending around to one side of the axis of the member; means pivotally connecting one end of said arm to the member and constraining the other end of the arm to swinging motion parallel to said face of the member, said other end of the arm being adapted to swing in one direction relative to the member in consequence to centrifugal force as the speed of rotation of the member increases; an axial thrust cam connected with said other end of the arm to be moved thereby, said cam having a cam surface thereon exposed at the opposite face of the member for engagement with the cam follower to move the same away from said opposite face of the member and effect actuation of the breaker points once each revolution of said member, said cam having a portion overlying and bearing against said opposite face of the member whereby reaction of the cam to the thrust of the cam follower is taken by that portion of the member which the cam overlies; biasing means yieldably restraining movement of the arm in response to centrifugal force; and stop means on said member for defining the limits of motion of the arm in response to centrifugal force and to said biasing means.

9. In an ignition system for an internal combustion engine having a crankshaft and fixed and movable breaker points operated by a cam actuated follower, means for automatically varying the timing of breaker point operation in accordance with the speed of the engine, comprising: a member rotatably driven from the engine crankshaft; a cam for actuating said follower; means connecting the cam with said member for bodily rotation therewith and for movement relative thereto in a plane substantially perpendicular to the axis of rotation of the member, movement of the cam in one direction relative to said member effecting earlier engagement of the cam with its follower, said connecting means including a weighted centrifugally responsive arm eccentrically pivoted on the member so as to effect movement of the cam relative to the member in said direction in response to centrifugal force acting on the arm as the speed of rotation of said member increases; a spring reacting between the cam and said member and tending to move the cam in the opposite direction so as to yieldingly resist response of said arm to centrifugal force; and a surface on said member along which the cam moves and against which it bears to transmit the thrust of the cam follower to said member.

10. In an ignition system for an internal combustion engine having a cam shaft and a timing gear thereon by which the cam shaft is driven from the crankshaft of the engine at one-half crankshaft speed: fixed and movable breaker contacts; a breaker cam; means mounting the cam on said timing gear for bodily rotation therewith and for motion relative thereto in the direction of rotation of the timing gear in response to centrifugal force; a spring reacting between the cam and the timing gear and tending to move the cam in the opposite direction; stop means on the timing gear for limiting motion of the cam relative to the timing gear under the influence of centrifugal force as well as of said springs; a cam follower alongside the timing gear in position to be operatively engaged by said cam once each revolution of the timing gear; and a motion transmitting connection between the cam follower and the movable breaker contact.

11. A high speed, high compression, single cylinder internal combustion engine having a spark plug and a crank shaft driven bipole magneto having stator and rotor elements, provided with inductively coupled primary and secondary windings on a coil core which connects the poles of one of the magneto elements and a permanent magnet connecting the poles of the other element to produce a magnetomotive force in the coil core which reverses twice for each revolution of the rotor element, wherein the primary circuit is normally closed and is open only when a pair of normally closed breaker contacts connected in the primary circuit are opened, and wherein the spark plug is fired by the high sparking voltage induced in the secondary winding each time the normally closed breaker contacts are opened: characterized by the fact that the longest pole face of one of the magneto elements is considerably shorter than the shortest pole face of the other magneto element and the pole faces of one magneto element are of such length and so related to the pole faces of the other magneto element that for an instant the gaps between the pole faces of each magneto element are simultaneously substantially bridged by the pole faces of the other, at which instant the magnetomotive force in the coil core due to the permanent magnet abruptly reverses, the interval of rotor rotation directly following such abrupt reversal producing a high substantially uniform magnetomotive force in the coil core due to the permanent magnet; and further characterized by the fact that the breaker contacts are controlled by a single lobed breaker cam driven at one-half crankshaft speed, the effective angular length of which is such that opening and reclosure of the breaker contacts can take place during said interval of rotor rotation when the magneto motive force in the coil core due to the permanent magnet is substantially uniform, and by the fact that the cam is so timed with respect to the rotor position at the desired spark time as to effect opening of the breaker contacts shortly after the reversal in magneto motive force directly preceding said interval of rotor rotation and reclosure of the breaker contacts before the next successive reversal in magnetomotive force so that whenever the primary circuit is open the magnetomotive force in the coil core due to the permanent magnet remains substantially unchanged, and whenever the magnetomotive force in the coil core due to the permanent magnet is changing the primary circuit is closed and current flows through the primary winding to produce a magnetomotive force in the coil in opposition to the magnetomotive force therein due to the permanent magnet to thereby prevent rapid flux changes in the coil core, which unless prevented, would result in unwanted non-breaker produced firing of the spark plug.

12. A high speed, high compression, single cylinder internal combustion engine having a spark plug and a crankshaft driven bipole magneto having stator and rotor elements, provided with inductively coupled primary and secondary windings on a coil core which connects the poles of one of the magneto elements and a permanent magnet connecting the poles of the other element to produce a magnetomotive force in the coil core which reverses twice for each revolution of the rotor element, wherein the primary circuit is normally closed and is open only when a pair of normally closed breaker contacts connected in the primary circuit are opened, and wherein the spark plug is fired by the high

sparking voltage induced in the secondary winding each time the normally closed breaker contacts are opened: characterized by the fact that the longest pole face of one of the magneto elements is considerably shorter than the shortest pole face of the other magneto element and the pole faces of one magneto element are of such length and so related to the pole faces of the other magneto element that for an instant the gaps between the pole faces of each magneto element are simultaneously substantially bridged by the pole faces of the other, at which instant the magneto motive force in the coil core due to the permanent magnet abruptly reverses, the interval of rotor rotation directly following such abrupt reversal producing a high substantially uniform magnetomotive force in the coil core due to the permanent magnet; and further characterized by the fact that the breaker contacts are controlled by an engine driven single lobed breaker cam, the effective angular length of which is such that opening and reclosure of the breaker contacts can take place during said interval of rotor rotation when the magnetomotive force in the coil core due to the permanent magnet is substantially uniform, and by the fact that the cam is so timed with respect to the rotor position at the desired spark time as to effect opening of the breaker contacts shortly after the reversal in magnetomotive force directly preceding said interval of rotor rotation and reclosure of the breaker contacts before the next successive reversal in magnetomotive force so that whenever the primary circuit is open the magnetomotive force in the coil core due to the permanent magnet remains substantially unchanged, and whenever the magnetomotive force in the coil core due to the permanent magnet is changing the primary circuit is closed and current flows through the primary winding to produce a magnetomotive force in the coil core in opposition to the magnetomotive force therein due to the permanent magnet to thereby prevent rapid flux changes in the coil core, which unless prevented, would result in unwanted non-breaker produced firing of the spark plug.

13. A high speed, high compression, single cylinder internal combustion engine having a spark plug and a crankshaft driven bipole magneto having stator and rotor elements, provided with inductively coupled primary and secondary windings on a coil core which connects the poles of one of the magneto elements and a permanent magnet connecting the poles of the other element to produce a magnetomotive force in the coil core which reverses twice for each revolution of the rotor element, wherein the primary circuit is normally closed and is open only when a pair of normally closed breaker contacts connected in the primary circuit are opened, and wherein the spark plug is fired by the high sparking voltage induced in the secondary winding each time the normally closed breaker contacts are opened: characterized by the fact that the faces of each magneto element are of equal length and the faces of one of the magneto elements are considerably longer than the faces of the other magneto element and the pole faces of one magneto element are of such length and so related to the pole faces of the other magneto element that for an instant twice each revolution of the rotatable magneto element the gaps between the poles faces of each magneto element are simultaneously substantially bridged by the pole faces of the other, at which instant the magnetomotive force in the coil core due to the permanent magnet abruptly reverses, the interval of rotor rotation directly following such abrupt reversal producing a high substantially uniform magnetomotive force in the coil core due to the permanent magnet; and further characterized by the fact that the breaker contacts are controlled by a single lobed breaker cam driven at one-half crankshaft speed, the effective angular length of which is such that opening and reclosure of the breaker contacts can take place during one of said intervals of rotor rotation when the magnetomotive force in the coil core due to the permanent magnet is substantially uniform, and by the fact that the cam is so timed with respect to the rotor position at the desired spark time as to effect opening of the breaker contacts shortly after the reversal in magnetomotive force directly preceding said interval of rotor rotation and effects reclosure of the breaker contacts before the next successive reversal in magnetomotive force, so that whenever the primary circuit is open the magnetomotive force in the coil core due to the permanent magnet remains substantially unchanged and whenever the magnetomotive force in the coil core due to the permanent magnet is changing the primary circuit is closed and current flows through the primary winding to produce a magnetomotive force in the coil core in opposition to the magnetomotive force therein due to the permanent magnet to thereby prevent rapid flux changes in the coil core, which unless prevented, would result in unwanted non-breaker produced firing of the spark plug.

14. A high speed, high compression, single cylinder internal combustion engine having a spark plug and a crankshaft driven bipole magneto having stator and rotor elements, provided with inductively coupled primary and secondary windings on a coil core which connects the poles of one of the magneto elements and a permanent magnet connecting the poles of the other element to produce a magnetomotive force in the coil core which reverses twice for each revolution of the rotor element, wherein the primary circuit is normally closed and is open only when a pair of normally closed breaker contacts connected in the primary circuit are opened and wherein the spark plug is fired by the high sparking voltage induced in the secondary winding each time the normally closed breaker contacts are opened: characterized by the fact that the faces of each magneto element are of equal length and the faces of one of the magneto elements are considerably longer than the faces of the other magneto element and the pole faces of one magneto element are of such length and so related to the pole faces of the other magneto element that for an instance twice each revolution of the rotatable magneto element the gaps between the pole faces of each magneto element are simultaneously substantially bridged by the pole faces of the other, at which instant the magnetomotive force in the coil core due to the permanent magnet abruptly reverses, the interval of rotor rotation directly following such abrupt reversal producing a high substantially uniform magnetomotive force in the coil core due to the permanent magnet; and further characterized by the fact that the breaker contacts are controlled by an engine driven single lobed breaker cam, the effective angular length of which is such that opening and reclosure of the breaker contacts can take place during one of said intervals of rotor rotation when the magnetomotive force in the coil core due to the

permanent magnet is substantially uniform, and by the fact that the cam is so timed with respect to the rotor position at the desired spark time as to effect opening of the breaker contacts shortly after the reversal in magnetomotive force directly preceding said interval of rotor rotation and effects reclosure of the breaker contacts before the next successive reversal in magnetomotive force, so that whenever the primary circuit is open the magnetomotive force in the coil core due to the permanent magnet remains substantially unchanged and whenever the magnetomotive force in the coil core due to the permanent magnet is changing the primary circuit is closed and current flows through the primary winding to produce a magnetomotive force in the coil core in opposition to the magnetomotive force therein due to the permanent magnet to thereby prevent rapid flux changes in the coil core, which unless prevented, would result in unwanted non-breaker produced firing of the spark plug.

15. A high speed, high compression, single cylinder internal combustion engine having a spark plug and a crankshaft driven symmetrical bipole magneto having a stator and a rotor, provided with inductively coupled primary and secondary windings on a coil core which connects the poles of the stator, wherein a permanent magnet connecting the poles of the rotor produces a magnetomotive force in the coil core which reverses twice for each revolution of the rotor, wherein the primary circuit is normally closed and is open only when a pair of normally closed breaker contacts connected in the primary circuit are opened, and wherein the spark plug is fired by the high sparking voltage induced in the secondary winding each time the normally closed breaker contacts are opened: characterized by the fact that the pole faces of the stator which are equal in length are considerably longer than the pole faces of the rotor which are also of equal length, the respective lengths of said pole faces being such that for an instant twice each revolution of the rotor the gaps between the pole faces of each magneto element are simultaneously substantially bridged by the pole faces of the other, at which instant the magnetomotive force in the coil core due to the permanent magnet abruptly reverses, the interval of rotor rotation directly following such abrupt reversal producing a high substantially uniform magnetomotive force in the coil core due to the permanent magnet; and further characterised by the fact that the breaker contacts are controlled by a single lobed breaker cam driven at one-half crankshaft speed, the effective angular length of which is such that opening and reclosure of the breaker contacts can take place during one of said intervals of rotor rotation when the magnetomotive force in the coil core due to the permanent magnet is substantially uniform, and by the fact that the cam is so timed with respect to the rotor position at the desired spark time as to effect opening of the breaker contacts shortly after the reversal in magnetomotive force directly preceding said interval of rotor rotation and reclosure of the breaker contacts before the next successive reversal in magnetomotive force so that whenever the primary circuit is open the magnetomotive force in the coil core due to the permanent magnet remains substantially unchanged and whenever the magnetomotive force in the coil core due to the permanent magnet is changing the primary circuit is closed and current flows through the primary winding to produce a magnetomotive force in the coil core in opposition to the magnetomotive force therein due to the permanent magnet to thereby prevent rapid flux changes in the coil core, which unless prevented, would result in unwanted non-breaker produced firing of the spark plug.

16. The combination set forth in claim 11 wherein the position of the breaker cam is adjustable with respect to the rotor element to advance or retard the spark; means biasing the breaker cam in a direction to retard the spark; centrifugally responsive means acting upon the breaker cam to advance the spark with increasing engine speed; and stop means limiting the adjustment of the breaker cam to a range which affords proper spark timing at all speeds and at running speeds effects opening and closing of the breaker contacts within said interval of rotor rotation during which a high substantially uniform magnetomotive force is produced in the coil core due to the permanent magnet.

17. The combination set forth in claim 16 further characterized by the fact that the open period of the breaker contacts at running speeds substantially coincides with said interval of rotor rotation during which a high substantially uniform magnetomotive force is produced in the coil core due to the permanent magnet.

18. The combination set forth in claim 15 wherein the position of the breaker cam is adjustable with respect to the rotor element to advance or retard the spark; means biasing the breaker cam in a direction to retard the spark; centrifugally responsive means acting upon the breaker cam to advance the spark with increasing engine speed; and stop means limiting the adjustment of the breaker cam to a range which affords proper spark timing at all speeds and at running speeds effects opening and closing of the breaker contacts within said interval of rotor rotation during which a high substantially uniform magnetomotive force is produced in the coil core due to the permanent magnet.

19. The combination set forth in claim 18 further characterized by the fact that the open period of the breaker contacts at running speeds substantially coincides with said interval of rotor rotation during which a high substantially uniform magnetomotive force is produced in the coil core due to the permanent magnet.

DOROTHY H. MADLÉ,
Administratrix of the Estate of Alain M. Madlé, Deceased.

REFERENCES CITED

The following references are of record in the file of this patent:

UNITED STATES PATENTS

Number	Name	Date
1,224,247	Wacker	May 1, 1917
1,291,216	Smith	Jan. 14, 1919
1,463,968	Kettering	Aug. 7, 1923
1,636,017	Smith	July 19, 1927
1,736,441	Hendrickson	Nov. 19, 1929
1,904,308	Harmon	Apr. 18, 1933
2,013,541	Littlefield	Sept. 3, 1935
2,215,106	Lefebvre	Sept. 17, 1940

Aug. 12, 1952 O. LUTZ 2,606,541

INTERNAL-COMBUSTION ENGINE

Filed Oct. 6, 1948 2 SHEETS—SHEET 1

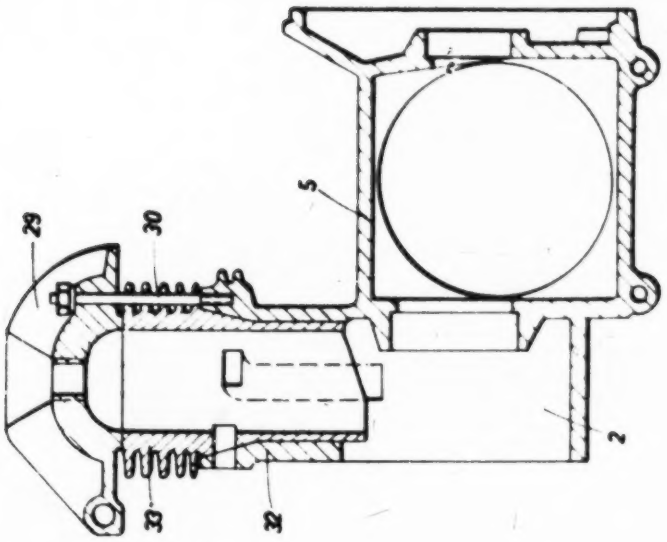

Fig 3

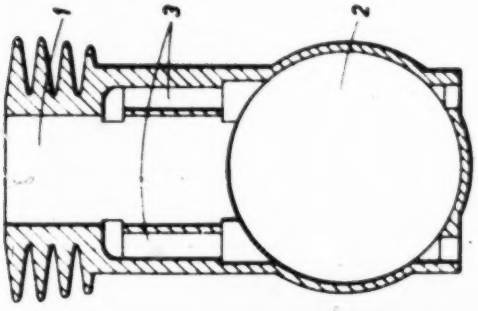

Fig 2

Fig. 4

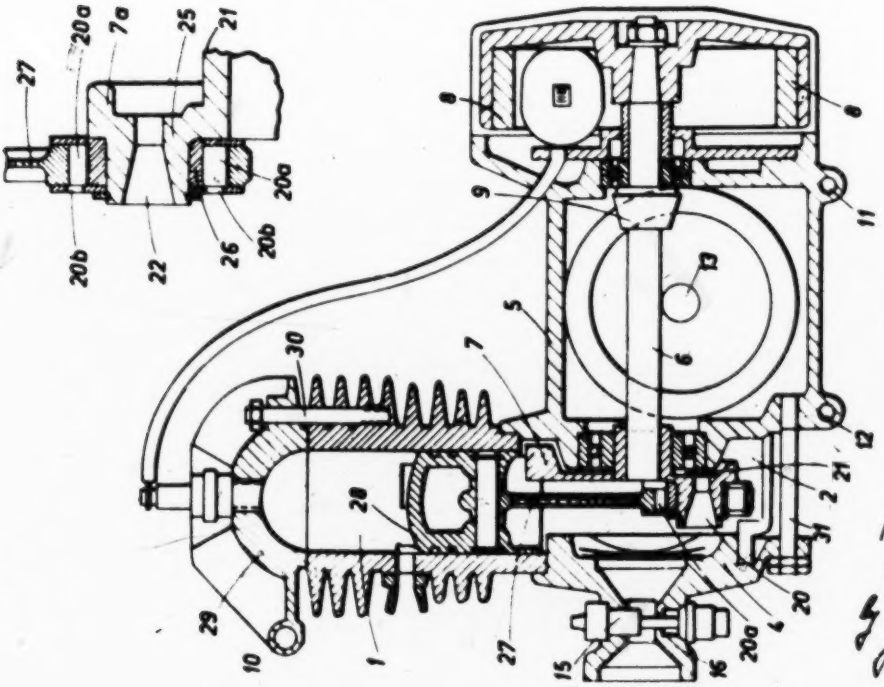

Fig. 1

INVENTOR:
Otto LUTZ
by [signature]
Attorney

P-477

Aug. 12, 1952 O. LUTZ 2,606,541

INTERNAL-COMBUSTION ENGINE

Filed Oct. 6, 1948 2 SHEETS—SHEET 2

Fig. 6

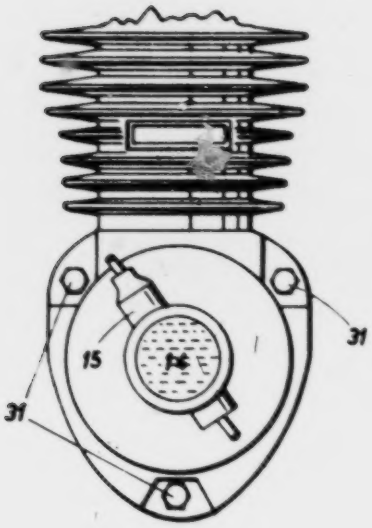

Fig. 5

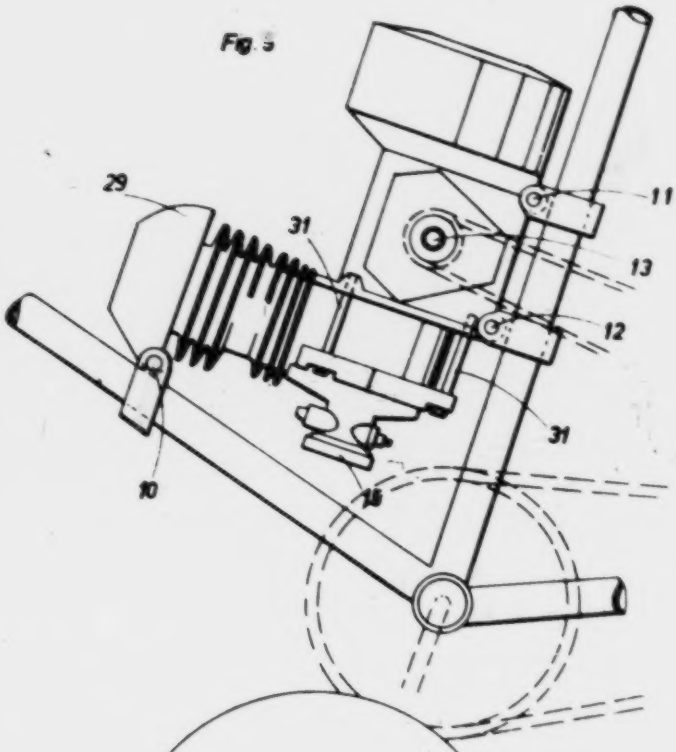

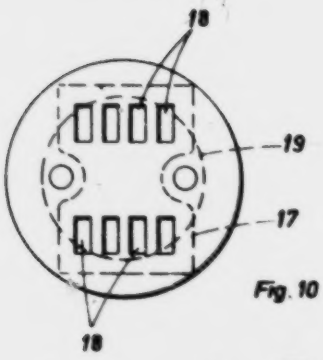

Fig. 10

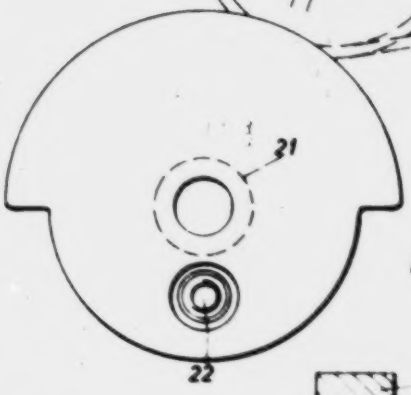

Fig. 7

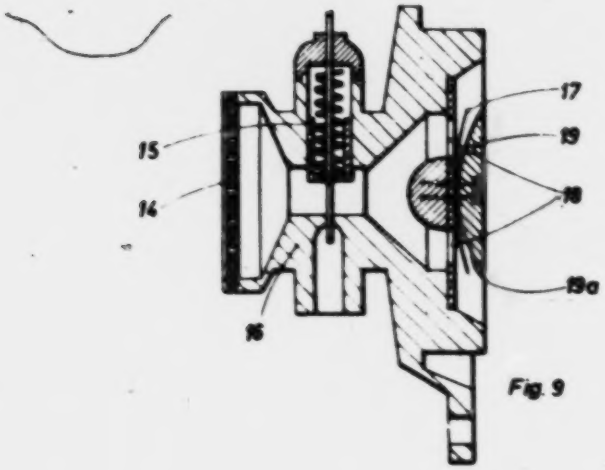

Fig. 9

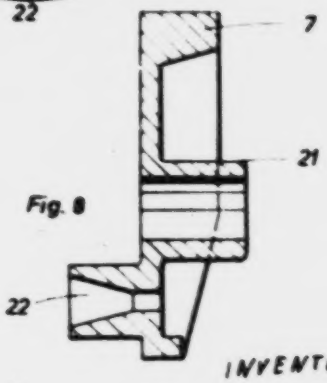

Fig. 8

INVENTOR:
Otto LUTZ
by [signature]
Attorney

Patented Aug. 12, 1952 2,606,541

UNITED STATES PATENT OFFICE

2,606,541

INTERNAL-COMBUSTION ENGINE

Otto Lutz, Braunschweig, Germany

Application October 6, 1948, Serial No. 53,123
In Great Britain October 16, 1947

14 Claims. (Cl. 123—73)

1

My invention relates to small single cylinder internal combustion piston engines suitable for use, for example, as the auxiliary engines of pedal bicycles.

An object of my invention is to provide a sturdy cheap construction having a favourable power weight ratio and especially so in the case of small two-stroke single cylinder engines suitable for use as the auxiliary engine of a bicycle of ordinary construction.

To conduce to this end another object of the present invention is to provide a single cylinder internal combustion piston engine wherein the drive from the crank shaft to the output shaft is by way of a direct bevel gear and wherein the support of the crank shaft is by means of two widely spaced bearings, preferably ball bearings, both of which and the said bevel gear are disposed on one side of the crank, one bearing adjacent the crank and the other on the side of the bevel pinion remote from the crank so that the main structural parts of the engine consisting of the cylinder, crank case and gear box containing the said bevel gear may together form an L-shaped structure.

A further object of the invention is to obtain a smooth quiet drive with a spiral gear effect and with the bevel pinion preferably at one of the torsional vibration nodes of the crank shaft.

The invention further aims at a construction in which the members of the aforesaid L structure can be assembled components which are easy to inspect before assemblage and can be so constructed as to require but simple machining operations to make ready for use and to be readily assembled frictional spigot and faucet fashion with the aid of screw-nutted bolts. The jointing may be made tight by suitably choosing the unit contact pressure between machined metal surfaces or between these and suitable interposed packing.

The L shape of the engine as aforesaid enables it to fit very neatly in a cycle frame, for example, with the cylinder lying along the front down tube and the gear box lying along the rear down saddle tube or vice versa and the said output shaft may then be provided with a driving chain sprocket. Furthermore it is easy to arrange the mounting of the engine so that its centre of gravity lies on or substantially on a line passing through upper and lower points of suspension.

A further object of the invention is to construct the crank web for mass-balancing in such a manner as to allow for one of the bearings to be located close to the said web and so that the

2

crank disc may be made very rigid and light in weight and conduces to easy balancing as well as to very small bending stresses by virtue of a very short lever arm between the centres of the crank pin bearing and the main bearing.

In the case of two-stroke engines the admission device for the combustible mixture may be designed as a diaphragm arranged on a grid shaped admission opening and held in position by a current limiting stop, the deflection of the diaphragm and thus the stresses of the diaphragm material at any point of the diaphragm being limited by the stop. This admission device may be arranged on the crank case cover, which latter may carry the carburettor and the air filter. The cover may form a part of the carburettor, for instance its casing, thus conducing to a simple, compact, robust and reliable construction. Likewise in the case of two stroke engines the lubricant is usually mixed with the petrol and the aforesaid arrangement of the admission device in the crank case cover has the advantage that the connecting rod bearing and crank shaft bearing are directly subjected to the gas stream of the petrol-oil mixture and are thus continuously lubricated and well cooled, ensuring long service life even under heavy load. The L-shape of the engine enables the crank case to be cast in one piece either with the cylinder or with the gear case. Either construction is favourable to manufacturing economies and weight reduction and increases the dimensional accuracy and rigidity of the motor.

Forming the cylinder and the crank case in one casting has the further advantage that the crank case may be fastened merely by clamping it between its cover and the gear box by bolting these two parts together. The transfer passages from the crank case to cylinder in the case of two-stroke engines may be conventionally formed in the casting, but to minimise expenditure of material and weight it is preferred to bore these transfer passages which assures their exact position and proper surface. This lessens the fuel consumption and the formation of eddies with resulting droplets from the gas mixture in two-stroke engines.

If the crank case and the gear box are combined in one casting, a shouldered down bottom of the cylinder can be received in a cylindrical extension of the crank case.

In either case the cylinder may be fitted with a liner. The cylinder head for two stroke engines is preferably fastened by means of screw-nutted bolts re-acting at points of the cylinder at the

level of the parts where the cylinder wall is of ample thickness. In this way a distortion of the more sensitive upper zone of the cylinder is avoided.

To mount this novel engine, e. g., into a pedal bicycle frame, two suspension points are provided preferably arranged on an axis passing through the centre of gravity, a third fastening point being provided to receive the reaction moments.

In order that the present invention may be the more readily understood reference is hereinafter made to the constructional form for a two stroke engine illustrated by way of example in the accompanying drawings, in which form—

Fig. 1 shows a longitudinal section through an engine according to the invention.

Fig. 2 represents a diagrammatic cross section through the cylinder crank case casting and

Fig. 3 shows a modified design, the crank case and gear box forming one casting.

Fig. 4 shows an enlarged view of the crank pin and big end bearing.

Fig. 5 shows a view of the engine mounted in the frame of a pedal bicycle.

Fig. 6 is an end view of the engine showing the method of bolting the main structural parts of the engine together.

Figs. 7 and 8 show an enlarged side view and sectional view of the disc crank.

Fig. 9 is a sectional view of the carburettor.

Fig. 10 a fragmentary view of the mixture admission device.

In Figs. 1 and 2 the cylinder 1 and the crank case 2 form one casting, the transfer passages 3 from the crank case to the cylinder admission ports being bored. One side of the crank case is closed by the cover 4, the other by the gear box 5 the case of which is formed by another casting. These parts are assembled by tie bolts 31 which clamp the crank case 2 between the flanges of the cover 4 and the casting 5 only through friction. This enables quick, simple and reliable assembling of the component parts.

The crank shaft 6 is supported exclusively by ball bearings in the end wall of the gear box 5. As shown the crank shaft 6 carries at one end the crank web 7 and at the other end the fly wheel magnet 8. A bevel gear is used. The bevel pinion 9 is fixed on the crank shaft at the vibration node, thus reducing wear and noise of the gearing to a minimum. The axis of the crank shaft is arranged with reference to the axis of the output shaft 13 so that the two do not intersect and the pinion directly engages the wheel to produce a spiral gear effect.

The cylinder and crank case casting on the one hand and the juxtaposed gear case with attached fly wheel magnet on the other hand—are arranged with the cylinder and gear box axes at right angles to one another in the shape of an L. One leg which on occasion may be the vertical leg of the L is formed by the cylinder and the other leg which on occasion may be the horizontal leg by the gear case, the latter being at right angles to the general plane of the disc crank. For fastening this unit e. g., in the frame of a bicycle, two suspension points 10 and 11 are provided on an axis through the centre of gravity. A third fixing point 12 may be provided to receive the reaction moments. In case the engine is used as a bicycle motor, a sprocket wheel is fixed on the shaft 13 driven from the crank shaft 6.

Though other designs are possible, it is advisable to combine the carburettor, the air filter and the admission device with the crank case cover 4. The crank case cover may be designed to enable the air filter 14 to be attached by clamping or otherwise fixed in an easily interchangeable manner in front of the carburettor 15, the latter in the illustrated example including part of the cover 4 which forms the carburettor casing 16. The admission device may consist of a diaphragm 17 held in position on grid shaped admission openings 18 in the cover 4 by a stop body 19 which limits the deflection of the diaphragm by a bent stop surface 19a. The position of the admission device will be preferably chosen such that the suction gas stream strikes the connecting rod bearing 20 and the main crank shaft bearing 21, thus lubricating and cooling these two bearings sufficiently even under heavy loading of the engine. The admission of the petrol-oil mixture to the rollers of the connecting rod bearing 20a may be facilitated by holes in the end plates 20b of this bearing. A central opening 22 may be provided through the crank pin to permit the passage of the gas stream to the main crank bearing 21. The crank web may consist of ordinary unalloyed steel to avoid detrimental distortion by heat treatment. The crank pin 60 projects from one face of the web 7 which is in the form of a disc, the other face of which has an annular recess 62 opening towards the gear box, the inner rim 63 of the recess forming the hub for receiving the end of the crank shaft and the disc having radial and axial mass-balancing extensions of the portion 64 of the outer rim 7a remote from the crank pin. The main bearing 21 is located in the recess between its inner face and a spigot portion 65 of the gear box intruding into the recess. A sufficient strength of the web is afforded by its double-U-shaped cross section. In the main bearing 21 is mounted the hub which is pushed on the crank shaft and is located for the most part within the outer rim 7a. In order to obtain the required surface hardness of the crank pin a hardened steel sleeve 24 may be pressed on to the pin. The thin-walled sleeve 24 is thoroughly hardened, thus avoiding the frequently insufficient case hardening depth of conventional crank pins. The cost of production is reduced by this arrangement because the price of hardened parts depends on their weight according to the required expenditure of heat. Besides the small sleeve can be properly centreless ground.

The structural parts not yet described, such as connecting rod 21, piston 23, cylinder head 29 etc., are of normal design. It is convenient and advantageous to fasten the cylinder head 29 on the cylinder 1 with the aid of tie bolts 30 which are fastened to the cylinder 1 at the level of the ports, i. e., at a point where the cylinder wall is of ample thickness, thus securing reliable reception of the retaining forces and avoiding the danger of the most sensitive upper zone of the cylinder barrel being distorted. The design and arrangement of some parts may be modified, e. g., the admission device could be arranged at the side of the crank case closed by the gear box 5. In this modification the arrangement may be such that the gas mixture may enter the crank case through the main crank bearing 21 lubricating on its way this bearing and the connecting rod bearing. In this case the carburettor and air filter could remain in their former position or could for instance be installed in the space

between the two legs of the L, by providing a suitable suction pipe to the crank case.

Fig. 3 shows a modification of the L-construction where gear box 6 and crank case 7 with cylindrical extension 8a form one casting. In this case a shouldered down crank case end of the cylinder 20 may be received in said extension 22 of the crank case. The contact surfaces between the cylinder shoulder (shown conical) and the corresponding mating part of the aforesaid extension are situated at the level of the ports, thus improving the heat transmission and avoiding distortions in the port region.

What I claim is:

1. A single cylinder internal combustion piston engine comprising a cylinder and a crank shaft the axes of which are at right angles to each other, a crank case, two bearings by which said crank shaft is supported, a power output shaft and a bevel reduction gear through which said crank shaft directly drives said output shaft a case containing said gear, said bevel reduction gear comprising a bevel pinion and a bevel wheel and said bevel pinion engaging said bevel wheel in the half of the wheel remote from the said cylinder axis, one of said bearings being disposed in said gear case adjacent to the crank and between the crank and the said bevel pinion and the other of the said bearings being disposed in said gear case adjacent to the said pinion and on the side of the pinion remote from the crank.

2. A single cylinder internal combustion piston engine comprising a cylinder and a crank shaft, the axes of which are at right angles to each other, two bearings supporting said crank shaft, a bevel reduction gear through which said crank shaft directly drives said output shaft, said bevel reduction gear comprising a bevel pinion and a bevel wheel and said bevel pinion engaging the said bevel wheel in the half of the wheel remote from the said cylinder axis, one of said bearings being disposed adjacent the crank and between the crank and the said bevel pinion and the other of said bearings being disposed adjacent to the said pinion in the half of the wheel remote from the crank, the crank being in the form of a disc having a crank pin projecting from one face of said disc, the opposite face of said disc having an annular recess forming an outer rim and an inner cylindrical hub in which the end of said crank shaft is fixed and on which seats the said bearing adjacent the crank, and said disc having radial and axial extensions of its outer rim remote from the crank pin to mass-balance the reciprocating parts of the engine.

3. An engine according to claim 2, comprising a connecting rod and a ball or roller bearing supporting said connecting rod on said crank pin.

4. An engine according to claim 2, said bevel reduction gear being in a case having a spigot which intrudes into said recess, said bearing adjacent the crank being a ball bearing located between said hub and said spigot.

5. A single cylinder internal combustion piston engine comprising a cylinder and a crank shaft the axes of which are at right angles to each other, two bearings supporting said crank shaft a power output shaft, a bevel pinion on said crank shaft and a bevel wheel on said power output shaft forming a direct reduction gear drive between the crank shaft and the output shaft, said bevel pinion engaging said bevel wheel in the half of the wheel remote from the said cylinder axis, one of said bearings being disposed adjacent to the crank and between the crank and the said bevel pinion and the other of the said bearings being disposed adjacent to the said pinion and on the side of the pinion remote from the crank, a connecting rod and a bearing supporting said rod on the crank, a crank casing, a casing containing said bevel pinion and wheel, said latter case extending from one end of said crank casing, the other end of said crank casing being provided with a separate cover and means in said cover permitting the combustible mixture and lubricant to be led into the crank case so that the stream of mixture and lubricant cools and lubricates the said connecting rod bearing and the said crank shaft bearing adjacent the crank.

6. An engine according to claim 5, comprising a grid carried by said cover, a diaphragm normally covering said grid and arranged to be deflected off the grid for the passage of the mixture through the grid into the crank case and a dome-shaped member forming a stop for the diaphragm in its opening movement and limiting the said movement, said cover having an outward extension, and carburetter and mixture control means being carried by said extension.

7. An engine according to claim 1, in which the driving pinion of the bevel gear is located at a torsional vibration node of the crank shaft.

8. An engine according to claim 1, comprising a gear case containing said bevel gear and a flywheel magnet disposed on the end of said crank shaft remote from the crank and outside the gear case.

9. A single cylinder internal combustion piston engine comprising a cylinder and a crank shaft the axes of which are at right angles to each other, a crank case, two bearings by which said crank shaft is supported, a power output shaft and a bevel reduction gear through which said crank shaft directly drives said output shaft, a case containing said gear, said bevel reduction gear comprising a bevel pinion and a bevel wheel and said bevel pinion engaging said bevel wheel in the half of the wheel remote from the said cylinder axis, one of said bearings being disposed in said gear case adjacent to the crank and between the crank and the said bevel pinion and the other of the said bearings being disposed adjacent to the said pinion and on the side of the pinion remote from the crank, the axis of said crank shaft making a chord with said wheel and not intersecting the axis of the output shaft.

10. A single cylinder internal combustion piston engine comprising a cylinder and a crank shaft the axes of which are at right angles to each other, a crank case, two bearings by which said crank shaft is supported, a power output shaft and a bevel reduction gear through which said crank shaft directly drives said output shaft, a case containing said gear, said bevel reduction gear comprising a bevel pinion and a bevel wheel and said bevel pinion engaging said bevel wheel in the half of the wheel remote from the said cylinder axis, one of said bearings being disposed in said gear case adjacent to the crank and between the crank and the said bevel pinion and the other of the said bearings being disposed in said gear case adjacent to the said pinion and on the side of the pinion remote from the crank, said crank case and the case of said cylinder being formed from a single casting and said gear case being formed as another casting, said gear case casting being secured to one end and an end cover being fitted to the other end of the crank case.

11. A single cylinder internal combustion pis-

P-482

ton engine comprising a cylinder and a crank shaft the axes of which are at right angles to each other, a crank case, two bearings by which said crank shaft is supported, a power output shaft and a bevel reduction gear through which said crank shaft directly drives said output shaft, a case containing said gear, said bevel reduction gear comprising a bevel pinion and a bevel wheel and said bevel pinion engaging said bevel wheel in the half of the wheel remote from the said cylinder axis, one of said bearings being disposed in said gear case adjacent to the crank and between the crank and the said bevel pinion and the other of the said bearings being disposed in said gear case adjacent to the said pinion and on the side of the pinion remote from the crank, said crank case and said gear case being formed from a single casting and the case of said cylinder being formed from a separate casting and inserted in said combined crank case and gear case casting.

12. An engine according to claim 11, said crank and gear box casting having a cylindrical extension from the crank casing, said cylinder casing having a shouldered down portion which makes frictional spigot and faucet engagement with the crank casing, the joints between them being secured by bolting together.

13. A single cylinder internal combustion piston engine comprising a casing providing a cylinder and a crank shaft, the axes of which are at right angles to each other, a crank casing, two bearings by which said crank shaft is supported, a power output shaft and a bevel reduction gear through which said crank shaft directly drives said output shaft, a casing for said gear, said bevel reduction gear comprising a bevel pinion and a bevel wheel and said bevel pinion engaging said bevel wheel in the half of the wheel remote from the said cylinder axis, one of said bearings being disposed in said gear casing adjacent to

the crank and between the crank and the said bevel pinion and the other of the said bearings being disposed in said gear casing adjacent to the said pinion and on the side of the pinion remote from the crank, said crank casing being cast in one piece with one of said other casings, mixture admission ports in the cylinder casing, and transfer passages bored through the wall of the crank casing and leading from the crank casing to said ports.

14. An engine according to claim 13, comprising a cylinder head fastened by tie bolts to the cylinder casing substantially at the level of said mixture admission ports.

OTTO LUTZ.

REFERENCES CITED

The following references are of record in the file of this patent:

UNITED STATES PATENTS

Number	Name	Date
688,838	Dorsey	Dec. 17, 1901
866,497	Smith	Oct. 15, 1907
1,219,377	Davidson	Mar. 13, 1917
1,308,033	Christensen	July 1, 1919
1,323,266	Roehl	Nov. 18, 1919
1,424,705	Abell	Aug. 1, 1922
1,425,007	Rowledge	Aug. 8, 1922
1,661,550	Vincent	Mar. 6, 1928
1,672,426	Thege	June 7, 1928
1,696,044	Woolson	Jan. 8, 1929
1,812,456	Tapp	June 30, 1931
2,133,456	Lesage	Oct. 18, 1938
2,192,442	Hoffman	Mar. 5, 1940
2,390,990	Raybon	Dec. 11, 1945

FOREIGN PATENTS

Number	Country	Date
600,271	France	of 1925
603,782	France	of 1926

Feb. 10, 1953 L. D. BAKKE 2,627,940

INTERNAL-COMBUSTION ENGINE LUBRICATION

Filed Oct. 4, 1950 2 SHEETS—SHEET 1

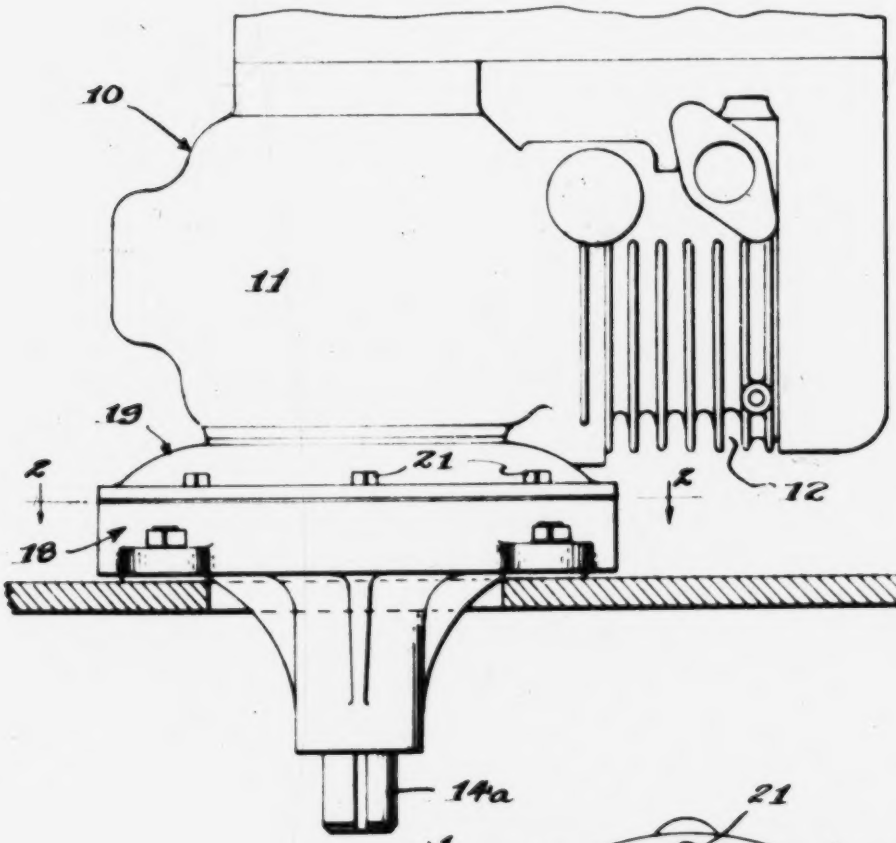

Fig. 1

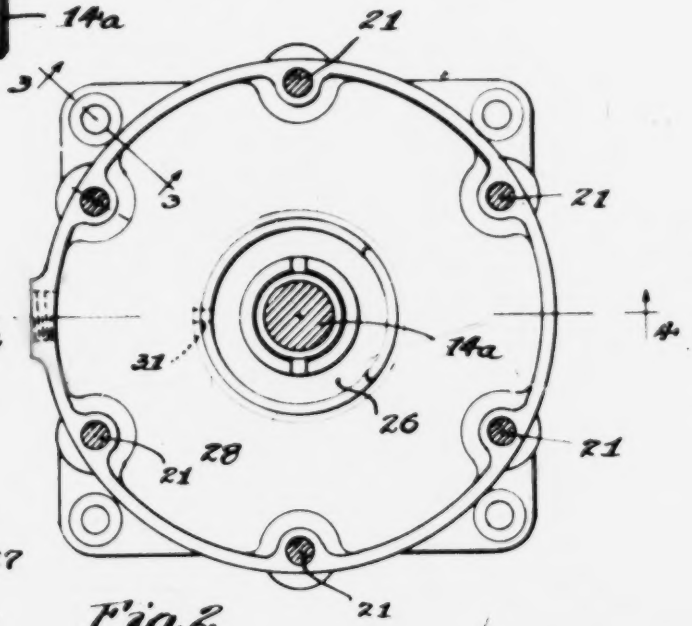

Fig. 2

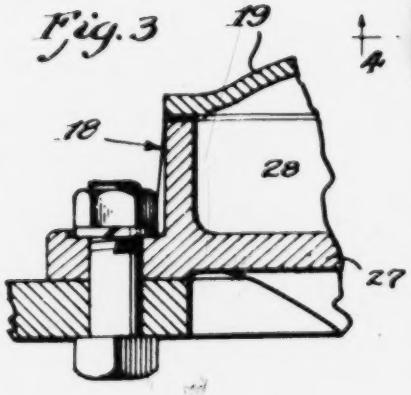

Fig. 3

INVENTOR.
Laurence D. Bakke

BY
Hauke & Hardesty
Attorneys.

Feb. 10, 1953 L. D. BAKKE 2,627,940

INTERNAL-COMBUSTION ENGINE LUBRICATION

Filed Oct. 4, 1950 2 SHEETS--SHEET 2

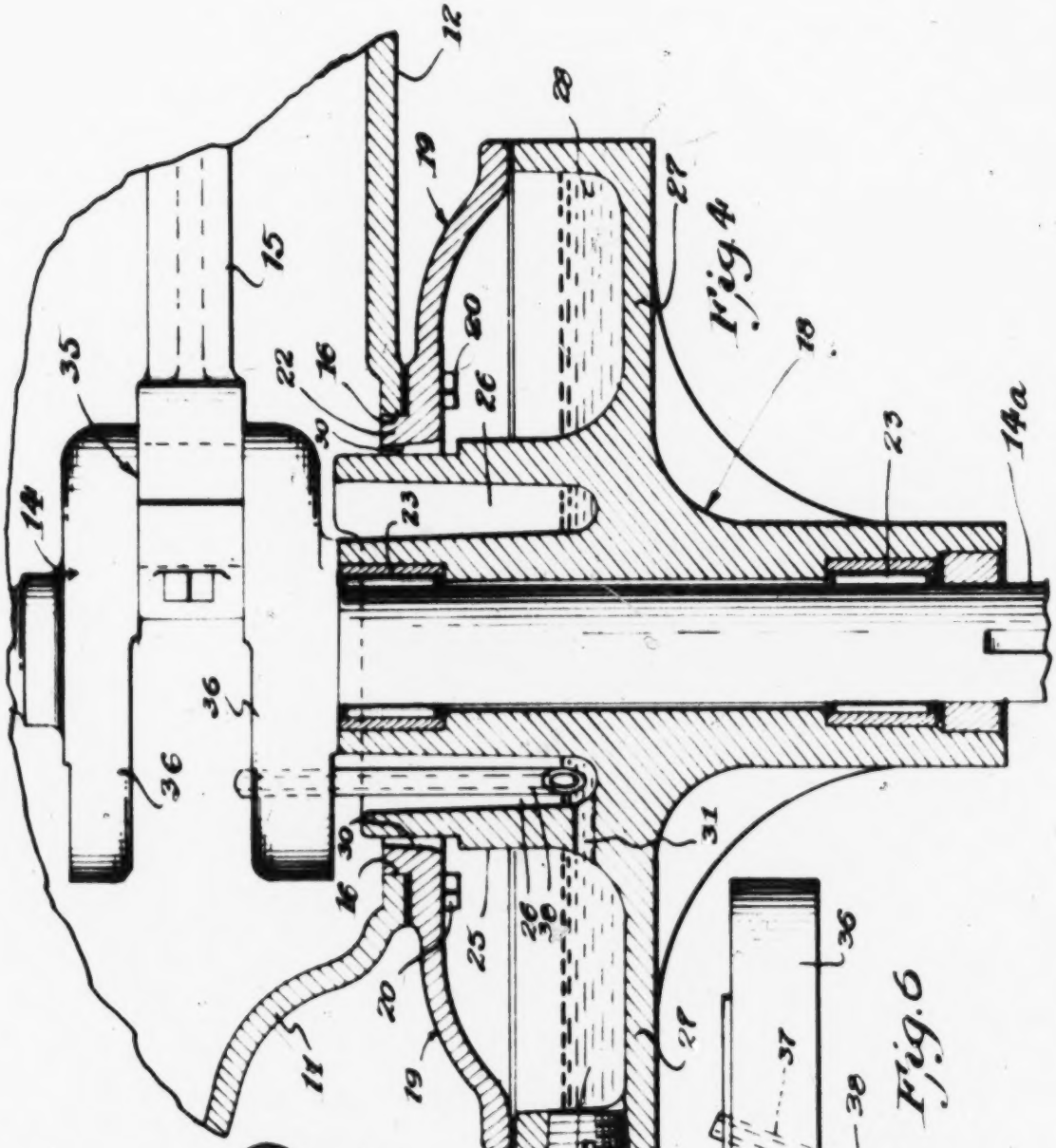

Fig. 4

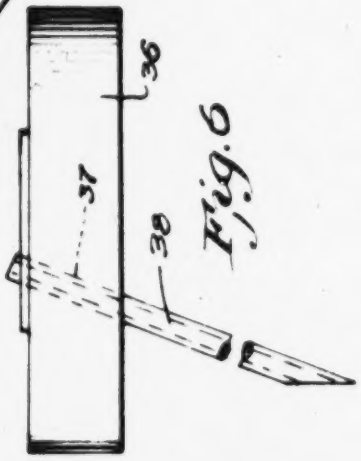

Fig. 6

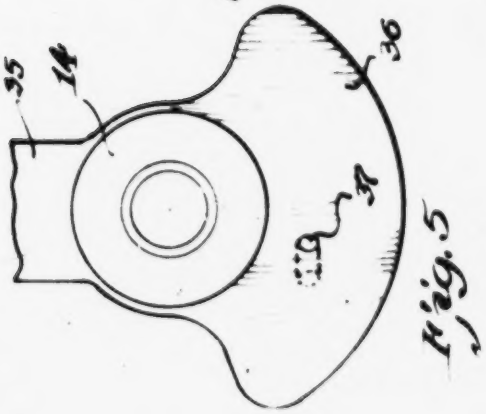

Fig. 5

INVENTOR.
Laurence D. Bakke
BY
Hauke & Hardesty
Attorneys

Patented Feb. 10, 1953

2,627,940

UNITED STATES PATENT OFFICE

2,627,940

INTERNAL-COMBUSTION ENGINE LUBRICATION

Laurence D. Bakke, Plymouth, Mich., assignor to Continental Motors Corporation, Detroit, Mich., a corporation of Virginia

Application October 4, 1950, Serial No. 188,460

7 Claims. (Cl. 184—13)

1

My invention relates to internal combustion engines and more particularly to the lubricating system for engines of relatively small horsepower and size, and which comprises a vertically extending crankshaft.

The conventional crankcase oil sump is not applicable to engines of this type and usually some means for force feeding lubricating oil to the moving engine parts to be lubricated is embodied in such engines. The expense of a force feed lubrication system is a problem in connection with the manufacture and sale of such engines, because of the highly competitive nature of this type of engine. Most of this type of power plant embody only a single engine cylinder, and a splash lubrication system is quite adequate to lubricating such moving engine parts that require lubrication.

The present invention is aimed to overcome the lubrication difficulties present in this type of small engine, by providing a splash system applicable to engines having a vertically extending crankshaft.

Engines of this type have of late been quite widely used in powering rotary type power mowers, and the main object of the present invention is to overcome the lubrication problems by providing a simple and compact splash lubrication system which can be embodied in such engines with a minimum of labor and expense, and which requires a minimum of servicing.

For a more detailed understanding of my invention, reference may be had to the accompanying drawings illustrating a preferred embodiment of the invention in which like parts throughout the several views are identified by like reference characters, and in which

Fig. 1 is an elevational view of an engine incorporating the principles of my invention.

Fig. 2 is a plan detail view of the crankcase closure element which carries the crankshaft bearings with the adapter removed.

Fig. 3 is a detail sectional view taken on the line 3—3 of Fig. 2, but showing the means for securing the engine to its support and the relation of the adapter to said closure element.

Fig. 4 is a fragmentary vertical sectional view through the engine crankcase and closure assembly and taken generally in the plane indicated by section 4—4 of Fig. 2.

Fig. 5 is a fragmentary detail of the crankshaft showing the counterweight and the relation thereto of the dipper tube, and

Fig. 6 is an edge elevation thereof showing the dipper tube and taken substantially normal to the showing thereof in Fig. 4.

2

The engine herein illustrated comprises a crankcase and cylinder casting 10, preferably consisting of a crankcase portion 11 and a finned engine cylinder 12. This engine is a conventional piston engine, and the piston (not shown) is operable in the cylinder 12 and is connected with the engine crankshaft 14 by a conventional connecting rod 15. This crankshaft extends generally vertical and projects through the opening 16 in the wall of the crankcase.

A closure structure is secured to the crankcase and comprises a flanged crankshaft bearing plate 18 and an adapter 19, said adapter being secured to the crankcase by suitable bolts 20 and to the plate 18 by suitable bolts 21. The adapter is provided with a machined boss 22 piloted in the crankcase opening 16 to axially locate and position the plate 18 to align the crankshaft bearings 23 with the crankshaft extension 14a.

The plate 18 is constructed with a hub portion 25 provided with an annular recessed oil pocket 26 arranged concentric with the crankshaft axis. It is also constructed with a saucer like flange 27 providing an oil sump 28. The outer rim 29 of this flange 27 receives the peripheral rim of the adapter 19 and suitable gaskets are employed between the plate and adapter and between the adapter and crankcase (see Fig. 4).

It will be observed that the hub portion 25 of the plate extends or projects through the crankcase opening 16 and through the opening 30 in the adapter 19, and that this opening 30 is greater than the outside diameter of the hub portion 25 so as to permit oil to drain by gravity from the interior of the crankcase 11 into the oil sump 28. A hole 31 connects the sump 28 with the annular recess or trough 26, so as to meter an adequate flow of oil from the sump to the trough.

The crankshaft may be forged of an integral structure or the crankshaft extension 14a may be a separate shaft from the crankshaft proper and rigidly secured thereto in any known manner. The crankshaft 14 carries a crank portion 35 and a pair of counterweights 36 preferably oppositely disposed with respect to the crank portion. The counterweighted portion 36 of the crankshaft most closely adjacent to the bottom of the crankcase is provided with a sloping hole 37 in which is securely fixed a dipper tube 38. This dipper tube is moved round and round through the trough 26 and picks up or scoops up the lubricating oil from said trough and discharges same into the crankcase interior. Pref-

crably this dipper tube directs the oil generally towards the other counterweight 36, the oil stream discharged therefrom being broken up into a mist which circulates around in the crankcase and to the moving engine parts which require such lubrication.

It will be apparent to those versed in the art to which my invention pertains, that, though I have illustrated but one embodiment of the invention, various changes and modifications may be made in structure without departing from the spirit of my invention or from the scope of the appended claims.

I claim:

1. In an internal combustion engine having a vertically extending crankshaft, a crankcase having a bottom opening through which said crankshaft extends, a closure structure for the crankcase opening and provided with an oil sump portion and chamber openly communicating with the crankcase interior through the said opening and with an annular recessed lubricant collecting trough communicating with said oil sump portion and disposed substantially concentric with respect to the crankshaft axis, and a dipper carried by said crankshaft and disposed to travel in said trough and to scoop lubricating oil out of said trough and discharge same into the crankcase interior to lubricate moving engine parts.

2. In an internal combustion engine having a vertically extending crankshaft, a crankcase having a bottom opening through which said crankshaft extends, a closure structure for said crankcase opening and provided with a lubricant sump and chamber openly communicating with the crankcase interior through the said opening and with an annular trough communicating with said oil sump and disposed substantially concentric with respect to the crankshaft axis, said closure structure having an opening connecting said trough with said lubricant sump, and a dipper carried by said crankshaft and disposed to travel in said trough and to scoop lubricating oil out of said trough and discharge same directly into the crankcase interior to lubricate moving engine parts.

3. In an internal combustion engine having a vertically extending crankshaft, a crankcase having a bottom opening through which said crankshaft extends, a closure structure for the crankcase opening comprising a member having a hub portion carrying crankshaft bearing means and having an outwardly flanged saucer-like portion providing a lubricant sump around said hub portion, and an adapter piloted in said crankcase opening and secured to said member and serving to axially align the crankshaft bearing means with said crankshaft, said hub portion provided with an upwardly opening annular trough connected with the lubricant sump, and a dipper carried by said crankshaft and disposed to travel in said trough and to scoop lubricating oil out of said trough and to discharge same directly into the crankcase interior to lubricate moving engine parts.

4. In an internal combustion engine having a vertically extending crankshaft, a crankcase having a bottom opening through which said crankshaft extends, a closure structure for the crankcase opening comprising a member having a hub portion carrying crankshaft bearing means and having an outwardly flanged saucer-like portion providing a lubricant sump around said hub portion, and an adapter piloted in said crankcase opening and secured to said member and serving to axially align the crankshaft bearing means with said crankshaft, said hub portion projecting into said crankcase opening and provided with an upwardly opening annular trough open inwardly of the crankcase interior and connected with the lubricant sump, and a dipper carried by said crankshaft and disposed to travel in said trough and to scoop lubricating oil out of said trough and to discharge same directly into the crankcase interior to lubricate moving engine parts.

5. In an internal combustion engine having a vertically extending crankshaft, a crankcase having a bottom opening through which said crankshaft extends, a closure structure for the crankcase opening comprising a member having a hub portion carrying crankshaft bearing means and having an outwardly flanged saucer-like portion providing a lubricant sump around said hub portion, and an adapter piloted in said crankcase opening and secured to said member and serving to axially align the crankshaft bearing means with said crankshaft, said hub portion projecting into said crankcase opening and provided with an annular trough open inwardly of the crankcase interior and connected with the lubricant sump, and a dipper carried by said crankshaft and disposed to travel in said trough and to scoop lubricating oil out of said trough and to discharge same directly into the crankcase interior to lubricate moving engine parts, said adapter having an opening encircling said hub portion and spaced from the external surface of said hub to provide an opening permitting lubricant to drain from said crankcase interior into said lubricant sump, the outer peripheral rim of said adapter being joined with the outer peripheral rim of said saucer like portion of the closure structure member.

6. In an internal combustion engine having a vertically extending crankshaft, a crankcase having a bottom opening through which said crankshaft extends, a closure structure for the crankcase opening comprising a member having a hub portion carrying crankshaft bearing means and having an outwardly flanged saucer like portion providing a lubricant sump around said hub portion, and an adapter piloted in said crankcase opening and secured to said member and serving to axially align the crankshaft bearing means with said crankshaft, said hub portion projecting into said crankcase opening and provided with an annular trough open inwardly of the crankcase interior and connected with the lubricant sump, said crankshaft having a crank portion and a counterweighted portion, and a dipper carried by said counterweighted portion and disposed to travel in said trough and to scoop lubricating oil out of said trough and to discharge same directly into the crankcase interior to lubricate moving engine parts.

7. In an internal combustion engine having a vertically extending crankshaft, a crankcase having a bottom opening through which said crankshaft extends, said crankshaft having a crank portion and counterweighted portions extending oppositely to the offset crank portion, a closure structure secured to the crankcase to enclose the bottom opening of the crankcase, said closure structure having a saucer-like lubricant sump portion and a hub portion supporting the crankshaft, said hub portion having an annular trough concentric with respect to the crankshaft axis and communicated with said lubricant sump portion, and a dipper tube carried by said counterweighted portion most closely adjacent to said hub portion of said closure member and projected

into said annular trough, said dipper tube arranged to travel in said trough and to scoop lubricating oil out of said trough and to discharge same generally toward said other counter weighted portion of the crankshaft and into the crankcase interior to lubricate moving engine parts.

LAURENCE D. BAKKE.

REFERENCES CITED

The following references are of record in the file of this patent:

UNITED STATES PATENTS

Number	Name	Date
2,149,580	Collins	Mar. 7, 1939
2,539,619	Goodall	Jan. 30, 1951

March 10, 1953 A. S. BOSMA 2,630,881

INTERNAL-COMBUSTION ENGINE CONSTRUCTION

Filed April 15, 1949 2 SHEETS—SHEET 1

Fig. 1.

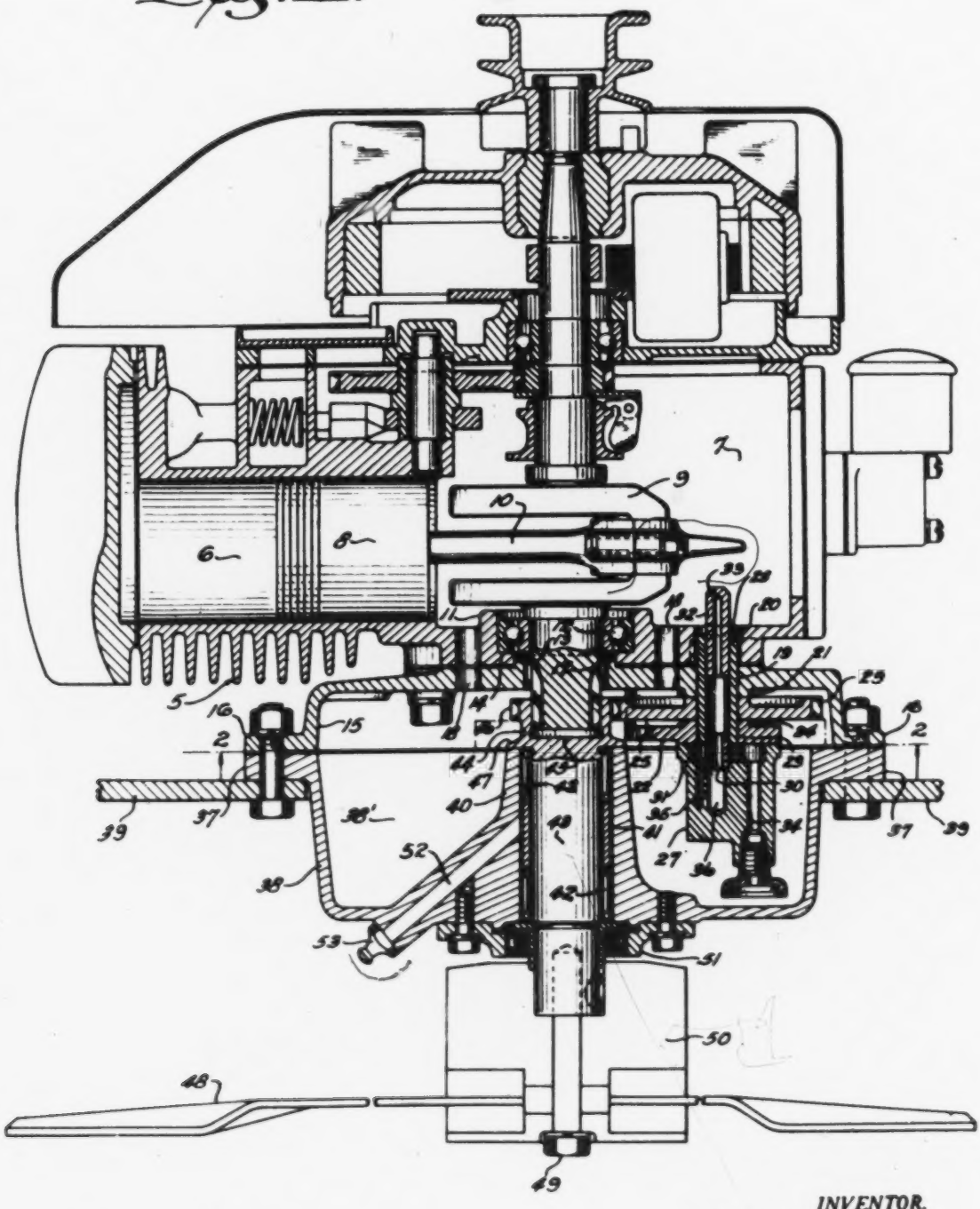

INVENTOR.
Alfred S. Bosma,
BY
Morsell & Morsell
ATTORNEYS

March 10, 1953 A. S. BOSMA 2,630,881

INTERNAL-COMBUSTION ENGINE CONSTRUCTION

Filed April 15, 1949 2 SHEETS—SHEET 2

Fig. 2.

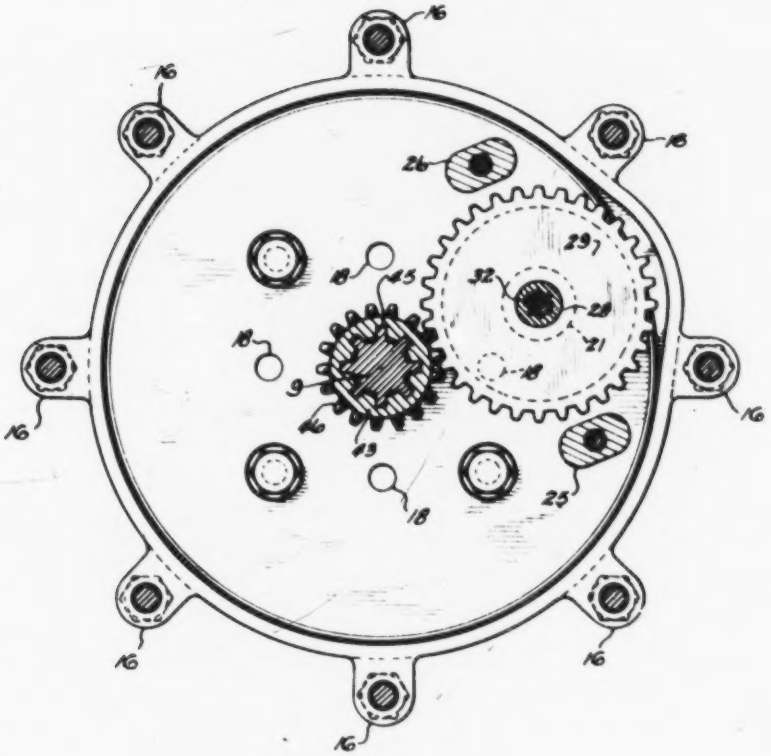

INVENTOR.
Alfred S. Bosma
BY
Morsell & Morsell
ATTORNEYS.

Patented Mar. 10, 1953

2,630,881

UNITED STATES PATENT OFFICE

2,630,881

INTERNAL-COMBUSTION ENGINE CONSTRUCTION

Alfred S. Bosma, New Holstein, Wis., assignor to Hart-Carter Company, Peoria, Ill., a corporation of Delaware

Application April 15, 1949, Serial No. 87,770

20 Claims. (Cl. 184—6)

1

This invention relates to improvements in internal combustion engine construction.

There are many applications wherein it is desirable to use an internal combustion engine having a vertically extending crankshaft connected to a vertically extending driven shaft for the purpose of transmitting power to a certain implement, fan blade, pump impeller, machine or other device requiring a drive of this type.

Since the pistons of this type of engine are horizontally disposed, a conventional splash type of lubrication system cannot be used. In addition, this type of engine must ordinarily be as compact as possible, while at the same time being so constructed as to effectively withstand any shock loads and/or vibration to which the driven member is subjected.

With the above in mind, it is therefore a general object of the invention to provide an improved construction for an internal combustion engine having a vertically extending crankshaft and having a vertically extending driven shaft wherein an annular oil sump is positioned below the crankcase and surrounding the driven shaft and into which oil can drain from the crankcase, said sump housing a gear type oil pump which is driven from said driven shaft.

Another object of the invention is to provide an engine construction of the class described wherein a relatively large driven shaft may be used and wherein the driven shaft and the crankshaft are connected in a manner to compensate for any misalignment thereof to thereby effectively prevent excessive wear on the engine due to shock loads and/or vibration to which the driven shaft is subjected.

Another object of the invention is to provide an engine construction of the class described having an upstanding boss formed in the bottom of the sump thereof and surrounding the driven shaft, said boss extending to a point near the level of the oil in said sump and forming a mounting for said driven shaft.

A further object of the invention is to provide an engine construction of the class described having a driven shaft formed at its upper end with an annular shoulder which rests on the upper end of the upstanding sump boss to vertically support said shaft, the upper end of said driven shaft also being formed with a recess having internal teeth for splined engagement with the crankshaft and being formed with external gear teeth which coact with the oil pump drive gear to drive said pump.

A further object of the invention is to provide

2

a construction of the class described wherein the oil pump is mounted on the underside of the sump cover, said pump having a tubular drive shaft which rotatably extends through alined apertures in the sump cover and bottom of the crankcase and having an oil discharge nozzle which rotatably projects into the crankcase to intermittently direct oil at the engine crank pin during engine operation.

A further object of the invention is to provide an engine construction of the class described which is compact, which is easily assembled and disassembled, and which is otherwise well adapted for the purposes described.

With the above and other objects in view, the invention consists of the improved internal combustion engine construction, and all of its parts and combinations, as set forth in the claims, and all equivalents thereof.

In the drawing accompanying and forming a part of this specification wherein is shown one complete embodiment of the preferred form of the invention, and wherein the same reference characters indicate the same parts in both of the views:

Fig. 1 is a vertical sectional view through an internal combustion engine embodying the improved construction; and

Fig. 2 is a transverse sectional view taken approximately through the line 2—2 of Fig. 1.

Referring more particularly to Fig. 1 of the drawing, the numeral 5 indicates an engine block having a horizontally disposed cylinder 6 and having a crankcase 7. A piston 8 is slidably positioned in the cylinder 6 and is connected to a vertically extending crankshaft 9 by a connecting rod 10. The bottom of the crankcase 7 is formed with an upstanding boss 11 which is bored to receive the crankshaft and a lower crankshaft bearing 12. The bore of the boss 11 has a portion of reduced diameter 13 to form a shoulder 14 on which the bearing 12 rests.

A sump cover plate 15, which is generally circular in shape, having substantially vertical sidewalls and having a plurality of outwardly projecting apertured lugs 16, is bolted to the underside of the crankcase. The sump cover plate 15 is formed with an upstanding bored boss 17 which fits into the bore 13 of the crankcase and through which the lower end of the crankshaft 9 extends. It will be noted that the bore of the boss 17 is larger than the diameter of the portion of the crankshaft thereadjacent.

The bottom of the crankcase 7 and the sump cover plate are formed with alined drain open-

ings 18, as well as with the alined openings 19 and 20, the latter being of slightly larger diameter than the former. The underside of the sump cover 15 is formed with a boss 21 surrounding the aperture 19 as shown in Fig. 1.

An oil pump mounting plate or bracket 22 extends horizontally and is spaced below the underside of the sump cover 15. The plate 22 is formed with a vertical aperture 23 which is coaxial with the aperture 19 in the cover 15. The plate 22 is formed with an upstanding boss 24 surrounding the aperture 23. The plate 22 is held in position by upstanding lugs 25 and 26 (see Fig. 2) formed at the ends thereof and bolted to the cover plate 15. A gear type oil pump 27 is fixed to the underside of the plate 22.

A tubular drive shaft 28 is rotatably positioned in the bores 19, 20 and 23, and fixed to said shaft between the bosses 21 and 24 is a pump drive gear 29. A sleeve 30 is preferably splined to the bore of one of the pump impeller gears 31 and to the lower end of the drive shaft 28. Fixedly positioned in the upper end of the drive shaft 28 is a tube 32 having its upper end closed and having said closed end formed with an angularly extending passage 33. The tube 32 forms a nozzle which rotates with the tubular drive shaft 28 during engine operation.

The oil pump 27 has an inlet passage 34 and an outlet passage 35. The outlet passage 35 extends downwardly and communicates with a bore 36 which, in turn, communicates with the bore of the sleeve 30 to provide a passage for oil under pressure to be delivered to the nozzle 32 through the drive shaft 28.

Bolted to the flanges 16 of the sump cover 15 are matching flanges 37 formed on a bowl-shaped sump or reservoir casing 38. The connecting bolts may also removably fix the entire engine, through the flanges 16 and 37, to a suitable supporting plate 39, as shown. The sump casing 38 is formed with a centrally disposed upstanding bearing boss 40 which is formed with an axial bore 41. The boss 40 forms an annular sump chamber 38' within the casing 38. The axis of the bore 41 is coincident with the axis of the crankshaft 9, and the boss 40 preferably extends substantially to the plane of the upper surface of the flange 37, as shown.

Positioned within the bore 41 of the boss 40 are suitable shaft bearings 42, and mounted for rotation in the bearings 42 is a relatively short driven shaft 43 having a relatively large diameter. The driven shaft 43 has an enlarged upper end 44 which is positioned above the upper end of the boss 40. The end portion 44 is formed with an end recess 45 having internal splines which engage external splines on the lower end of the crankshaft 9. The end portion 44 is also formed with external gear teeth 46 which engage the teeth of the oil pump drive gear 29, and with an outwardly projecting annular flange or shoulder 47 which engages the upper end of the boss 40. It is apparent that the driven shaft 43 is supported against lateral or axial downward movement by the boss 40 and the bearings 42.

The driven shaft 43 extends downwardly below the sump casing 38 and may be suitably connected to a device to be driven thereby. Fig. 1 shows a horizontal type lawn mower blade 48 connected to the shaft 43 by suitable means including a bolt 49 and a hub 50, the latter being keyed to the shaft 43. A suitable bearing cap and shaft seal assembly 51 may surround the shaft 43 at the underside of the sump casing 38

and be bolted to said casing as shown. A suitable passage 52 may be formed in the casing 38 to communicate between the bore 41 and an exterior lubricant fitting 53.

Operation of the engine causes rotation of the crankshaft 9 and of the driven shaft 43 splined thereto. The shaft 43, through the gear teeth 46, drives the oil pump drive gear 29 which, in turn, rotates the tubular drive shaft 28, the tube 32, and the impeller gear 31. Rotation of the intermeshing oil pump impeller gears causes lubricating oil to be drawn from the sump 38' into the inlet passage 34 and forces said oil out the outlet passage 35. This oil under pressure passes into the bore 36, through the sleeve 30, through the bore of the drive shaft 28, and tube 32, and is discharged out of the passage 33.

When the tube or nozzle 32 is in the position of Fig. 1 it directs a stream of lubricating oil at the crankpin of the crankshaft 9. However, since the nozzle 32 is rotating with the oil pump drive shaft 28 during engine operation, it directs oil at the crankpin only intermittently, i. e., once each revolution. Sufficient lubrication is obtained by this construction, and the operation is much more economical than if oil were continuously directed at the crankpin.

The oil in the crankcase 7 flows back to the sump 38' through the apertures 18, and since one of the apertures 18 drains oil onto the gear 29, sufficient lubrication is provided for said gear and the gear teeth 46 meshing therewith, as well as for the splined connection between the crankshaft 9 and the driven shaft 43. The level of the lubricating oil in the sump is preferably below the upper end of the boss 40.

It is apparent that the improved construction provides a very compact engine which is easily assembled or disassembled. By merely removing the sump casing 38 from the cover plate 15 the driven shaft 43 can be disengaged from the crank shaft and the pump drive gear 29. The novel mounting of the driven shaft within the sump casing 38, and the toothed connection of said shaft at its upper end with both the crankshaft and the oil pump drive gear not only makes for compactness and ease of assembly and disassembly, but it has other marked advantages. Among these advantages are the fact that a relatively large driven shaft may be used, thereby increasing the shock load which said shaft will withstand. The splined connection compensates for any misalignment between the crankshaft and the driven shaft and reduces vibration which would otherwise result during operation.

Various changes and modifications may be made without departing from the spirit of the invention, and all of such changes are contemplated, as may come within the scope of the claims.

What I claim is:

1. In an internal combustion engine having a crankcase, a vertically extending crankshaft mounted in said crankcase and having its lower end portion projecting through the bottom wall thereof; an oil reservoir below said crankcase and into which the lower end portion of the crankshaft projects; an upstanding vertically bored boss formed in the bottom of said reservoir and projecting to the upper portion thereof; and a driven shaft rotatably mounted in said boss, said driven shaft having a toothed driving connection with said crankshaft above said boss, said connection being disengageable by relative movement axially of said shafts, and said driven shaft

having shoulder means supported on an upper end portion of said boss to support said driven shaft against vertical downward movement, said driven shaft also having a lower end portion accessible from below the reservoir for connection with an element to be driven thereby.

2. In an internal combustion engine having a crankcase, a vertically extending crankshaft mouhted in said crankcase and having its lower end portion projecting through the bottom wall thereof; an oil reservoir below said crankcase and into which the lower end portion of the crankshaft projects; an upstanding vertically bored boss formed in the bottom of said reservoir and projecting to the upper portion thereof; and a driven shaft rotatably mounted in said boss, said driven shaft having a driving connection with said crankshaft above said boss, and said driven shaft being formed with an annular shoulder supported on the upper end of said boss to prevent vertical downward movement of said driven shaft, said shaft also having a lower end portion projecting below the reservoir for connection with an element to be driven thereby.

3. In an internal combustion engine having a crankcase, a vertically extending crankshaft mounted in said crankcase and having its lower end portion projecting through the bottom wall thereof; an oil reservoir below said crankcase and into which the lower end portion of the crankshaft projects; a centrally disposed, upstanding, vertically bored boss formed in the bottom of said reservoir and projecting to the upper portion thereof; and a driven shaft rotatably mounted in said boss, said driven shaft having a splined connection with said crankshaft above said boss, and said driven shaft having shoulder means in engagement with the upper end of said boss to support said driven shaft against vertical downward movement, said driven shaft also having a lower end portion projecting below the reservoir for connection with an element to be driven thereby.

4. In an internal combustion engine having a crankcase, a vertically extending crankshaft mounted in said crankcase and having its lower end portion projecting through the bottom wall thereof; an oil reservoir below said crankcase and into which the lower end portion of the crankshaft projects, said reservoir being separable into a bowl portion and a cover portion; an oil pump in said reservoir mounted on said cover portion and having a drive gear; an upstanding vertically bored boss formed in the bottom of said bowl portion; and a driven shaft rotatably mounted in said boss, said driven shaft having a toothed connection with said crankshaft and with said oil pump drive gear above said boss, said toothed connections being disengagable by relative movement axially of said shafts, whereby removal of the bowl portion of the reservoir from the cover portion thereof permits simultaneous disengagement of the driven shaft from the crankshaft and said oil pump drive gear.

5. In an internal combustion engine having a crankcase, a vertically extending crankshaft mounted in said crankcase and having its lower end portion projecting through the bottom wall thereof; an oil reservoir below said crankcase and into which the lower end portion of the crankshaft projects, said reservoir being separable into a bowl portion and a cover portion; a centrally disposed, upstanding, vertically bored boss formed in the bottom of said bowl portion

and projecting to the upper portion thereof; and a driven shaft rotatably mounted in said boss, said driven shaft having shoulder means in engagement with the upper end of said boss to support said driven shaft against vertical downward movement, and said driven shaft having a splined connection with said crankshaft above said boss, whereby removal of the bowl portion of the reservoir from the cover portion thereof permits simultaneous disengagement of the driven shaft from the crankshaft.

6. In an internal combustion engine having a crankcase, a vertically extending crankshaft mounted in said crankcase and having its lower end portion projecting through the bottom wall thereof; an oil reservoir below said crankcase and into which the lower end portion of the crankshaft projects, said reservoir being separable into a bowl portion and a cover portion; an upstanding vertically bored boss formed in the bottom of said bowl portion and projecting to the upper portion thereof; an oil pump mounted in said reservoir and having a drive gear; and a driven shaft rotatably mounted in said boss, said driven shaft having a splined connection with said crankshaft above said boss and being formed with external gear teeth adjacent said splined connection in driving engagement with said pump drive gear, the connections between the driven shaft and said crankshaft and oil pump gear being disengageable by relative movement axially of said shafts, whereby removal of the bowl portion of the reservoir from the cover portion thereof permits simultaneous disengagement of the driven shaft from the crankshaft and from said oil pump gear.

7. In an internal combustion engine having a crankcase, a vertically extending crankshaft mounted in said crankcase and having its lower end portion projecting through the bottom wall thereof; an oil reservoir below said crankcase and into which the lower end portion of the crankshaft projects, said reservoir being separable into a bowl portion and a cover portion; an upstanding vertically bored boss formed in the bottom of said bowl portion and projecting to the upper portion thereof; an oil pump in said reservoir fixed to the cover portion thereof and having a drive gear; and a driven shaft rotatably mounted in said boss, said driven shaft having a splined connection with said crankshaft above said boss and being formed with external gear teeth adjacent said splined connection in driving engagement with said pump drive gear, said driven shaft also being formed with an annular shoulder in engagement with the upper end of said boss to support said driven shaft against vertical downward movement, the connections between the driven shaft and said crankshaft and oil pump gear being disengageable by relative movement axially of said shafts, whereby removal of the bowl portion of the reservoir from the cover portion thereof permits simultaneous disengagement of the driven shaft from the crankshaft and from said oil pump gear.

8. In an internal combustion engine having a crankcase, a vertically extending crankshaft mounted in said crankcase and having an externally splined lower end portion projecting through the bottom wall thereof; an oil reservoir below said crankcase and into which the lower end portion of the crankshaft projects, said reservoir being separable into a bowl portion and a cover portion; an upstanding vertically bored boss formed in the bottom of said bowl portion and

projecting to the upper portion thereof; an oil pump mounted in said reservoir and having a drive gear and a driven shaft rotatably mounted in said boss, said driven shaft at its upper end having an internally splined recess in which the lower end of said crankshaft is removably positioned and said driven shaft at its upper end also being formed with external gear teeth and with an external annular shoulder, said shoulder being positioned in engagement with the upper end of said boss to support said driven shaft against vertical downward movement, and said external gear teeth drivingly engaging said pump drive gear, the connections between the driven shaft and said crankshaft and oil pump gear being disengageable by relative movement axially of said shafts, whereby removal of the bowl portion of the reservoir from the cover portion thereof permits simultaneous disengagement of the driven shaft from the crankshaft and from said oil pump gear.

9. In an internal combustion engine having a crankcase, a vertically extending crankshaft mounted in said crankcase and having its lower end portion projecting through the bottom wall thereof; an oil reservoir below said crankcase and into which the lower end portion of the crankshaft projects; a gear type oil pump mounted in said reservoir and having a tubular drive shaft through which said pump discharges oil, said drive shaft having a nozzle at one end which rotatably projects into said crankcase to intermittently direct a stream of oil at said crankshaft during operation; and a driven shaft rotatably mounted in said reservoir and having a driving connection with said crankshaft and with said oil pump drive shaft in said reservoir, said connections being disengageable by relative movement axially of said shafts, said driven shaft also having a lower end portion projecting below the reservoir for connection with an element to be driven thereby.

10. In an internal combustion engine having a crankcase, a vertically extending crankshaft mounted in said crankcase and having its lower end portion projecting through the bottom wall thereof; an oil reservoir below said crankcase and into which the lower end portion of the crankshaft projects; a gear type oil pump mounted in said reservoir and having a tubular drive shaft through which said pump discharges oil, said drive shaft having a nozzle at one end which rotatably projects into said crankcase, said nozzle being formed with an angularly disposed discharge passage for directing a stream of oil at said crankshaft when said passage is alined therewith; and a driven shaft rotatably mounted in said reservoir and having a driving connection with said crankshaft and with said oil pump drive shaft in said reservoir, said connections being disengageable by relative movement axially of said shafts, said driven shaft also having a lower end portion projecting below the reservoir for connection with an element to be driven thereby.

11. In an internal combustion engine having a crankcase, a vertically extending crankshaft mounted in said crankcase and having its lower end portion projecting through the bottom wall thereof; an oil reservoir below said crankcase and into which the lower end portion of the crankshaft projects; an upstanding vertically bored boss formed in the bottom of said reservoir and projecting to the upper portion thereof; a gear type oil pump mounted in said reservoir and having a tubular drive shaft having a nozzle at one end which rotatably projects into said crankcase to intermittently direct a stream of oil at said crankshaft during operation; and a driven shaft rotatably mounted in the reservoir boss, said driven shaft having a driving connection with said crankshaft and with said oil pump drive shaft above said boss, said connections being disengageable by relative movement axially of said shafts, and said driven shaft having a lower end portion projecting below the reservoir for connection with an element to be driven thereby.

12. In an internal combustion engine having a crankcase, a vertically extending crankshaft mounted in said crankcase and having its lower end portion projecting through the bottom wall thereof; an oil reservoir below said crankcase and into which the lower end portion of the crankshaft projects; an upstanding vertically bored boss formed in the bottom of said reservoir and projecting to the upper portion thereof; a gear type oil pump mounted in said reservoir and having a tubular drive shaft having a nozzle at one end which rotatably projects into said crankcase, said nozzle being formed with an angularly disposed discharge passage for directing a stream of oil at said crankshaft when said passage is alined therewith; and a driven shaft rotatably mounted in the reservoir boss, said driven shaft having a driving connection with said crankshaft and with said oil pump drive shaft above said boss, said connections being disengageable by relative movement axially of said shafts, and said driven shaft having a lower end portion projecting below the reservoir for connection with an element to be driven thereby.

13. In an internal combustion engine having a crankcase, a vertically extending crankshaft mounted in said crankcase and having its lower end portion projecting through the bottom wall thereof; an oil reservoir below said crankcase and into which the lower end portion of the crankshaft projects; an upstanding vertically bored boss formed in the bottom of said reservoir and projecting to the upper portion thereof; a gear type oil pump mounted in said reservoir and having a tubular drive shaft having a nozzle at one end which rotatably projects into said crankcase to intermittently direct a stream of oil at said crankshaft during operation; an oil pump drive gear fixed to said tubular drive shaft; and a driven shaft rotatably mounted in the reservoir boss, said driven shaft having a splined connection with said crankshaft above said boss and being formed with external gear teeth adjacent said splined connection in driving engagement with said pump drive gear, and said driven shaft also having a lower end portion projecting below the reservoir for connection with an element to be driven thereby.

14. In an internal combustion engine having a crankcase, a vertically extending crankshaft mounted in said crankcase and having its lower end portion projecting through the bottom wall thereof; an oil reservoir below said crankcase and into which the lower end portion of the crankshaft projects; an upstanding vertically bored boss formed in the bottom of said reservoir and projecting to the upper portion thereof; a gear type oil pump mounted in said reservoir and having a tubular drive shaft having a nozzle at one end which rotatably projects into said crankcase, said nozzle being formed with an angularly disposed discharge passage for directing a stream of oil at said crankshaft when said

passage is alined therewith; an oil pump drive gear fixed to said tubular drive shaft; and a driven shaft rotatably mounted in the reservoir boss, said driven shaft having a splined connection with said crankshaft above said boss and being formed with external gear teeth adjacent said splined connection in driving engagement with said pump drive gear, and said driven shaft also having a lower end portion projecting below the reservoir for connection with an element to be driven thereby.

15. In an internal combustion engine having a crankcase, a vertically extending crankshaft mounted in said crankcase and having its lower end portion projecting through the bottom wall thereof; an oil reservoir below said crankcase and into which the lower end portion of the crankshaft projects, said reservoir being separable into a bowl portion and a cover portion; an upstanding vertically bored boss formed in the bottom of said bowl portion and projecting to the upper portion thereof; a gear type oil pump in said reservoir fixed to the cover portion thereof and having a tubular drive shaft which projects through said cover and a portion of the bottom wall of the crankcase, said drive shaft having a nozzle at its upper end which rotatably projects into said crankcase to intermittently direct a stream of oil at said crankshaft during operation; an oil pump drive gear fixed to said tubular drive shaft; and a driven shaft rotatably mounted in the reservoir boss, said driven shaft having a splined connection with said crankshaft above said boss and being formed with external gear teeth adjacent said splined connection in drive engagement with said oil pump drive gear, said driven shaft also being formed with an annular shoulder in engagement with the upper end of said boss to support said driven shaft against vertical downward movement, and said driven shaft also having a lower end portion projecting below the reservoir for connection with an element to be driven thereby, the connections between the driven shaft and said crankshaft and oil pump gear being disengageable by relative movement axially of said shafts, whereby removal of the bowl portion of the reservoir from the cover portion thereof permits simultaneous disengagement of the driven shaft from the crankshaft and from said oil pump drive gear.

16. In an internal combustion engine having a crankcase, a vertically extending crankshaft mounted in said crankcase and having its lower end portion projecting through the bottom wall thereof; an oil reservoir below said crankcase and into which the lower end portion of the crankshaft projects, said reservoir being separable into a bowl portion and a cover portion; an upstanding vertically bored boss formed in the bottom of said bowl portion and projecting to the upper portion thereof; a gear type oil pump in said reservoir fixed to the cover portion thereof and having a tubular drive shaft which projects through said cover and a portion of the bottom wall of the crankcase, said drive shaft having a nozzle at its upper end which rotatably projects into said crankcase, said nozzle being formed with an angularly disposed discharge passage for directing a stream of oil at said crankshaft when said passage is alined therewith to intermittently direct a stream of oil at said crankshaft during operation, an oil pump drive gear fixed to said tubular drive shaft; and a driven shaft rotatably mounted in the reservoir boss, said driven shaft having a splined connection with said crankshaft above said boss and being formed with external gear teeth adjacent said splined connection in driving engagement with said oil pump drive gear, said driven shaft also being formed with an annular shoulder in engagement with the upper end of said boss to support said driven shaft against vertical downward movement, and said driven shaft also having a lower end portion projecting below the reservoir for connection with an element to be driven thereby, the connections between the driven shaft and said crankshaft and oil pump gear being disengageable by relative movement axially of said shafts, whereby removal of the bowl portion of the reservoir from the cover portion thereof permits simultaneous disengagement of the driven shaft from the crankshaft and from said oil pump drive gear.

17. In an internal combustion engine having a crankcase; a vertically extending crankshaft mounted in said crankcase and having its lower end portion projecting through the bottom wall of the crankcase; an oil reservoir below said crankcase and into which the lower end portion of the crankshaft projects; an upstanding vertically bored boss formed in the bottom of said reservoir and projecting to the upper portion thereof; and a driven shaft rotatably mounted in said boss, said driven shaft having a driving connection with said crankshaft, and said driven shaft having shoulder means supported on an upper end portion of said boss to support said driven shaft against vertical downward movement, said driven shaft also having a lower end portion accessible from below the reservoir for connection with an element to be driven thereby.

18. In an internal combustion engine having a crankcase; a vertically extending crankshaft mounted in said crankcase and having its lower end portion projecting through the bottom wall thereof; an oil reservoir below said crankcase into which the lower end portion of the crankshaft projects, said reservoir being separable into a bowl portion and a cover portion; an oil pump in said reservoir mounted on said cover; an upstanding vertically bored boss formed in the bottom of said bowl portion; and a driven shaft rotatably mounted in said boss; said driven shaft having a driving connection with said crankshaft and with said oil pump above said boss, said driving connection being of a type which is disengageable by relative movement axially of said shafts, whereby removal of the bowl portion of the reservoir from the cover portion causes simultaneous disengagement of the driven shaft from the crankshaft and oil pump drive gear.

19. In an internal combustion engine: a crankcase having a bottom wall; an oil reservoir below said crankcase, said reservoir having a separable bowl portion; a vertically extending crankshaft mounted in the crankcase and having its lower end portion projecting through the bottom wall of the crankcase and into the oil reservoir; an oil pump unit mounted in the reservoir, said oil pump unit including: an oil pump having a tubular drive shaft projecting vertically upwardly therefrom through which said pump discharges oil, and a drive gear on said drive shaft, said drive shaft having a nozzle at its upper end rotatably and axially slidably projecting through the bottom wall of the crankcase into said crankcase; and a driving connection in said reservoir between said crank-

shaft and oil pump drive gear, said driving connection being of the type which is disengageable by axial movement of said drive gear, whereby removal of the bowl portion of the reservoir permits removal of the oil pump unit from the engine by downward movement of said unit axially of said drive gear, said movement causing disengagement of the driving connection and withdrawal of the nozzle from the crankcase.

20. In an internal combustion engine having a crankcase, a vertically extending crankshaft mounted in said crankcase and having its lower end portion projecting through the bottom wall thereof; an oil reservoir below said crankcase and into which the lower end portion of the crankshaft projects, said reservoir being separable into a bowl portion and a cover portion; a centrally disposed, upstanding, vertically bored boss formed in the bottom of said bowl portion and projecting to the upper portion thereof; and a driven shaft rotatably mounted in said boss, said driven shaft having shoulder means in engagement with the upper end of said boss to support said driven shaft against vertical downward movement, and said driven shaft having a splined connection with said crankshaft whereby removal of the bowl portion of the reservoir from the cover portion thereof permits simultaneous disengagement of the driven shaft from the crankshaft.

ALFRED S. BOSMA.

REFERENCES CITED

The following references are of record in the file of this patent:

UNITED STATES PATENTS

Number	Name	Date
1,844,386	Harris	Feb. 9, 1932
2,152,607	Schmitter	Mar. 28, 1939
2,225,228	Neeson	Dec. 17, 1940
2,346,148	Bosma	Apr. 11, 1944
2,431,806	Karey	Dec. 2, 1947

FOREIGN PATENTS

Number	Country	Date
158,648	Great Britain	Feb. 7, 1921
647,987	France	Aug. 6, 1928

Feb. 16, 1954 H. S. BROWN 2,669,322

SPLASH TYPE LUBRICATING DEVICE FOR SINGLE CYLINDER HORIZONTAL INTERNAL-COMBUSTION ENGINES

Filed June 30, 1952 2 Sheets-Sheet 1

Fig. 1.

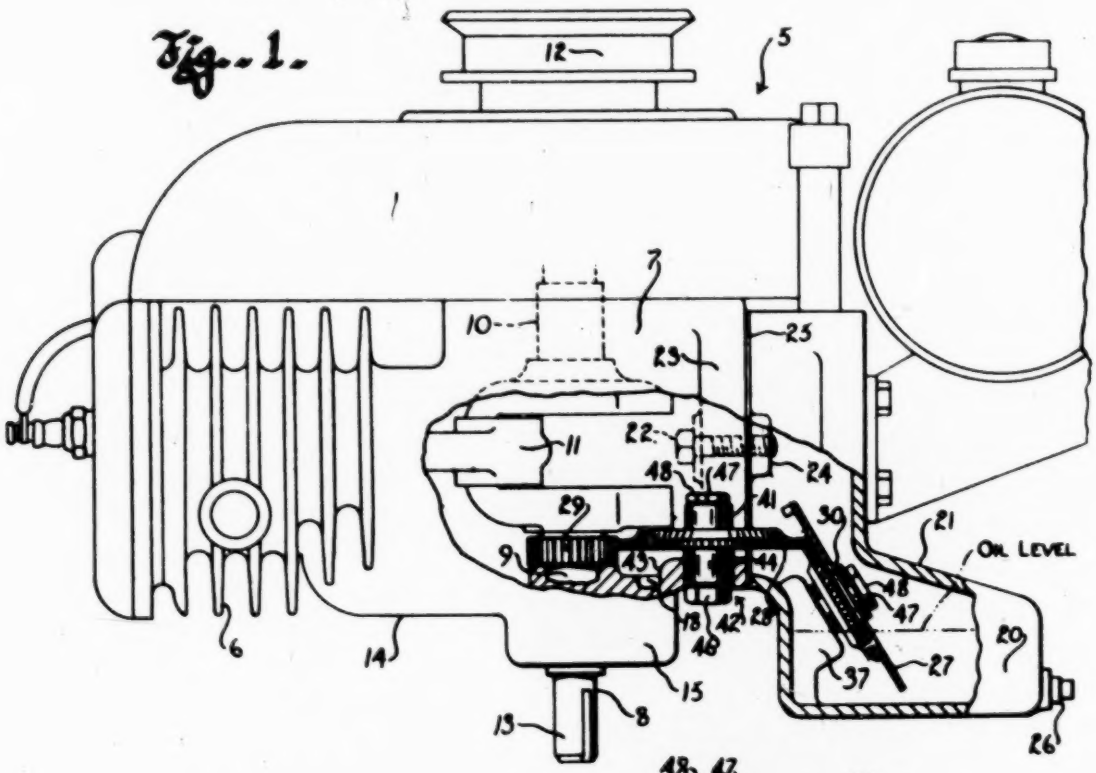

Fig. 2.

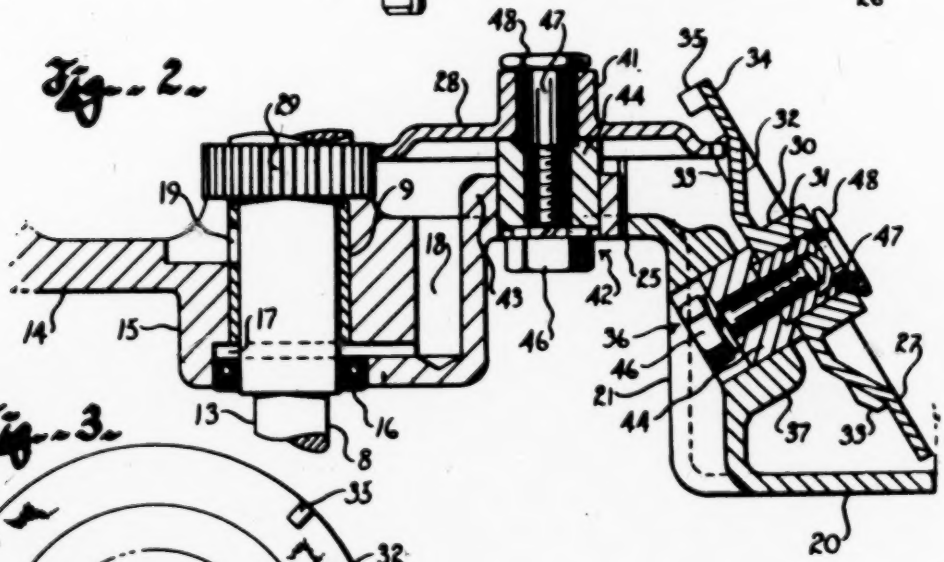

Fig. 3.

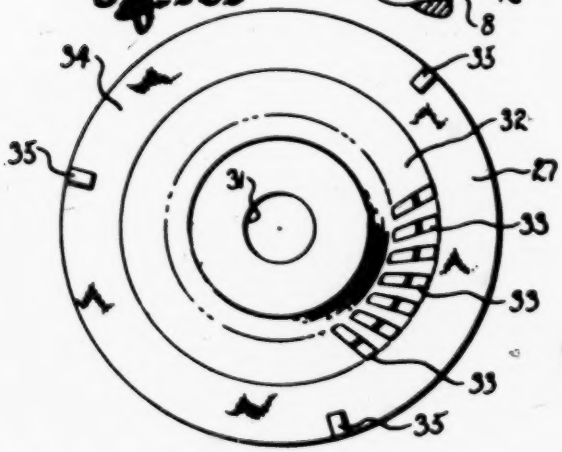

Inventor
Hugh S. Brown
By
Attorney

Feb. 16, 1954 H. S. BROWN 2,669,322

SPLASH TYPE LUBRICATING DEVICE FOR SINGLE CYLINDER HORIZONTAL INTERNAL-COMBUSTION ENGINES

Filed June 30, 1952 2 Sheets-Sheet 2

Fig. 4.

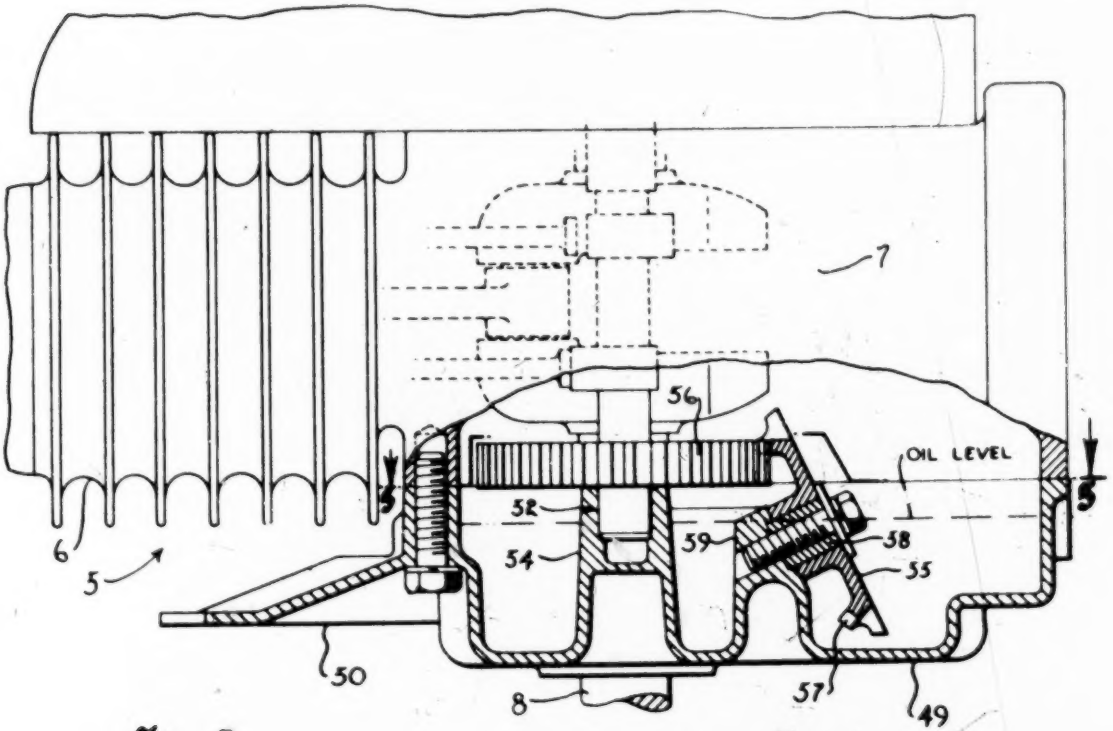

Fig. 5.

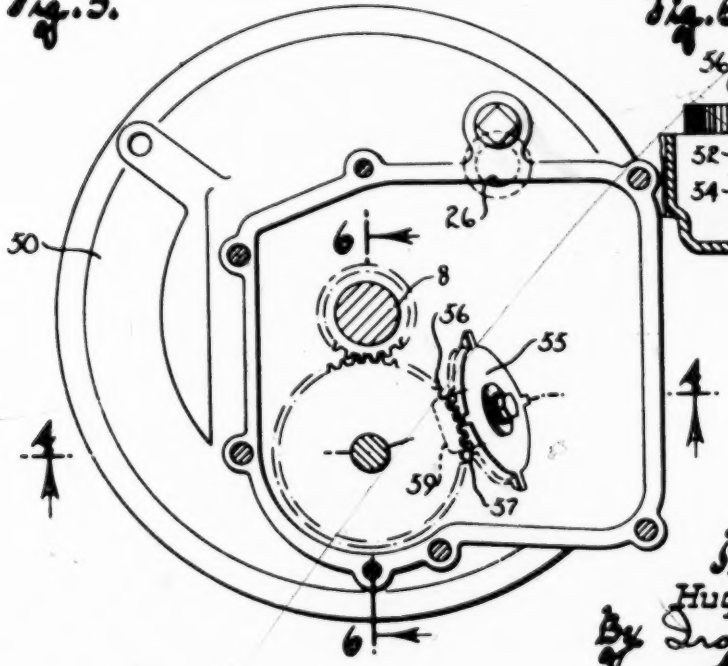

Fig. 6.

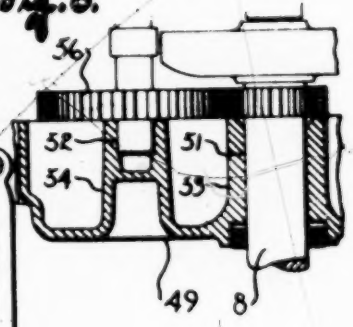

Inventor
Hugh S. Brown
By Ira Milton Jones
Attorney

Patented Feb. 16, 1954

2,669,322

UNITED STATES PATENT OFFICE

2,669,322

SPLASH TYPE LUBRICATING DEVICE FOR SINGLE CYLINDER HORIZONTAL INTERNAL-COMBUSTION ENGINES

Hugh S. Brown, Wauwatosa, Wis., assignor to Briggs & Stratton Corporation, Milwaukee, Wis., a corporation of Delaware

Application June 30, 1952, Serial No. 296,393

6 Claims. (Cl. 184—13)

1

This invention relates to splash type lubricating devices for internal combustion engines and refers more particularly to a device for the internal lubrication of small single cylinder horizontal engines in which the crankshaft is disposed on a vertical axis. The vertical disposition of their crankshafts adapts these engines to many uses not too well served by the more conventional upright engines, rotary power lawn mowers for instance. But in such horizontal engines the crankcase itself must be specially designed to prevent the supply of internal lubricating oil leaking out through the lower crankshaft bearing, especially when the engine is idle.

Moreover, unless the bottom of the crankcase is disposed well below the cylinder, the oil level in the crankcase would often be above the mouth of the cylinder, and oil would then seep through the piston rings and, of course, foul the engine. It is, therefore, necessary, in an engine having a vertical crankshaft, to provide an oil sump so disposed that the level of the oil therein is always spaced below the top of the lowermost crankshaft bearing and, of course, well below the cylinder. But this places the oil in the sump beyond the reach of the moving engine parts within the crankcase and introduces the problem of feeding the oil to the cylinder wall and the crankshaft bearings. While a pump could be used for this purpose, the added expense entailed thereby practically rules it out as a solution to the problem.

It is, therefore, an object of this invention to provide a simple inexpensive device which has none of the disadvantages of a pump, but instead operates upon the time tested splash principle, for lubricating the moving parts inside the crankcase of an engine of the type having a vertically disposed crankshaft.

More specifically it is an object of this invention to provide a unitary oil slinger member rotatably mounted within the engine with a portion thereof dipping into the oil bath and driven from the engine timing gears so as to throw oil out of the sump and onto the moving engine parts during operation of the engine.

With the above and other objects in view, which will appear as the description proceeds, this invention resides in the novel construction, combination and arrangement of parts substantially as hereinafter described and more particularly defined by the appended claims, it being understood that such changes in the precise embodiment of the hereindisclosed invention may be made as come within the scope of the claims.

2

The accompanying drawings illustrate two complete examples of the physical embodiments of the invention constructed according to the best modes so far devised for the practical application of the principles thereof, and in which:

Figure 1 is an elevational view of a single cylinder gasoline engine embodying the lubricating device of this invention, a portion of the crankcase and oil sump being broken away to better illustrate the lubricating device itself;

Figure 2 is an enlarged sectional view of a portion of the engine, said view corresponding substantially to that portion of the engine in the area shown broken away in Figure 1;

Figure 3 is a bottom view of the oil slinger member per se;

Figure 4 is a side view of a horizontal engine of different design from that shown in Figure 1, illustrating the application of this invention thereto, parts of said view being broken away and in section and on the plane of the line 4—4 in Figure 5;

Figure 5 is a horizontal sectional view through Figure 4 on the plane of the line 5—5; and

Figure 6 is a detail sectional view taken through Figure 5 on the plane of the line 6—6.

Referring now more particularly to the accompanying drawings in which like numerals designate like parts throughout the several views, and especially to Sheet 1 thereof, the numeral 5 designates generally a small single cylinder internal combustion engine of the type having a cylinder 6 at one side of a crankcase 7, the axis of the cylinder being horizontal, and having a crankshaft 8 mounted on a vertical axis.

Inside the crankcase, as is conventional, are a number of moving parts which are in need of lubrication at all times during operation of the engine, including the lower crankshaft main bearing 9, the upper crankshaft bearing 10, the connecting rod bearing 11, as well as the cylinder wall and the wrist pin bearings (not shown). The crankshaft projects from the crankcase at both its upper and lower ends, its upper end portion having a starter pulley 12 secured thereto and its lower end portion 13 being connectible with a device to be driven by the motor.

The lower wall 14 of the crankcase has a boss 15 in which the lower main bearing 9 is press fitted and which carries an oil seal 16 beneath the bearing. An annular space 17 around the crankshaft, between the lower main bearing and the oil seal, is communicated with the interior of the crankcase through an upwardly opening well 18 in the boss. The slight head of oil which

accumulates in this well 18 and the space 17 is beneficial in easing the friction at the heavily loaded lower main bearing during starting and before a fresh supply of oil is brought to the bearing through its oil hole 19.

The supply of lubricating oil for the engine is held in a sump 20, formed as part of a substantially L-shaped shell 21 which is bolted to the crankcase by screws 22 and closes what would be the bottom of the crankcase in a vertical or upright engine. A gasket 25 between the crankcase and the sump shell seals the connection between the two; and a drain plug 26, at the bottom of the outer side wall of the sump, enables the oil to be drained therefrom.

Oil from the sump is thrown onto the moving engine parts inside the crankcase by means of the novel lubricating device of this invention, which in the Figure 1 embodiment comprises a unitary disc-like slinger member 27 and an intermediate gear 28, which drives the slinger member and is in turn driven by a gear 29 on the crankshaft. The gear 29 is just above the main bearing and may be one of the timing gears of the engine.

Both the oil slinger and the intermediate gear are best molded of plastic, preferably nylon. The slinger comprises a hub portion 30 having a bore 31 therethrough to provide a bearing by means of which the slinger may be mounted, a frusto-conical medial portion 32 having gear teeth 33 on its outer conical face, and a flat rim-like outer portion 34 having three paddle-like projections 35 thereon which dip into the oil in the sump and throw it onto the moving engine parts in the interior of the crankcase as the slinger rotates.

The slinger is freely rotatably mounted on a bearing structure, indicated generally by the numeral 36, which projects into the sump from a boss 37 on the side wall of the sump adjacent to the crankcase proper, with its axis disposed at an acute angle to the crankshaft axis so that the lower side of the slinger periphery is adjacent to the bottom of the sump, and the opposite side of its periphery is closer to the crankshaft. The gear teeth 33 are on the bottom face of the slinger, i. e., the surface which faces the crankshaft.

The intermediate gear 28, like the slinger member, has a bored hub 41, and is mounted on a vertical bearing structure, designated generally by the numeral 42, which projects up into the crankcase from a boss 43 on the bottom crankcase wall, between the crankshaft and the slinger, so that the driving gear has its axis parallel to that of the crankshaft and meshes with the gear 29 on the crankshaft and with the gear teeth 33 on the bottom of the slinger.

The bearing structures by which the intermediate gear and the slinger are mounted include bored plugs 44 which are press fitted into accurately bored apertures in the bosses 43 and 37 in the bottom crankcase wall and the inner sump wall, respectively. Each plug has a stub shaft 47 secured thereto by a screw 48, upon which the hubs of the slinger and gear are directly journalled, the thrust bearings being provided by the adjacent ends of the plugs and heads 48 on the stub shafts. The employment of the plugs 44 eliminates the necessity for facing operations on the crankcase and sump shell castings, and thus facilitates manufacture of those parts.

It will be seen that the orbit of the paddle-like projections on the underside of the slinger member is such that, as the slinger rotates, the projections dip into the oil in the sump, passing near to the bottom thereof so that the slinger will operate satisfactorily when the oil level in the sump is low, and then move upwardly toward the crankshaft, passing part way into the interior of the crankcase itself. In the course of this orbit the projections throw oil onto the moving parts in the interior of the crankcase between and including the lower and upper crankshaft bearings 9 and 10, respectively, distributing oil substantially uniformly over all of them. After circulating over the parts, the oil of course returns to the sump by gravity.

The modified embodiment of the invention illustrated in Figures 4, 5 and 6 differs from that described principally in the way in which the sump for the lubricating oil is provided and the way in which the slinger is driven. Thus, the oil sump instead of being provided by an L-shaped shell bolted to what normally is the bottom of the crankcase is formed by a cover plate 49 bolted to and closing what, in a vertical engine, is the side of the crankcase.

This cover plate 49 not only provides the base 50 by which the engine is mounted in a horizontal position with its crankshaft axis vertical, but also has the lower main crankshaft bearing 51 and one of the cam shaft bearings 52 therein. To preclude the drainage of lubricant from the oil reservoir provided by the interior of the cover plate 49 the bearings 51 and 52 are located in upstanding bosses 53 and 54, respectively, the tops of which are well above the normal oil level.

The slinger 55 by which the oil is lifted from the sump or reservoir and thrown upwardly against the moving engine parts, as in the previously described embodiment of the invention, is mounted to rotate about an inclined axis so as to facilitate geared driving connection between the slinger and one of the timing gears 56, the bottom of the slinger being provided with gear teeth 57 for this purpose.

Attention is directed to the fact that no intermediate gear is necessary in this embodiment of the invention. The specific construction of the mounting for the slinger is also slightly different in this form of the invention and consists merely of a tubular stub shaft 58 bolted to an upstanding boss 59 which forms an integral part of the cover plate 49 and on which the slinger is freely journalled.

From the foregoing description taken in connection with the accompanying drawings, it will be readily apparent to those skilled in this art that this invention provides a simple inexpensive means of reliably lubricating the moving parts of a small gasoline engine which, because of its being mounted with its crankshaft axis vertical cannot employ the customary splash system of oiling wherein the crankshaft itself or some means on the connecting rod dips down into the oil bath to throw the oil up onto the moving parts; and that it entirely eliminates the problem of loss of lubricant through the bottom main bearing of such horizontal engines.

What I claim as my invention is:

1. In an internal combustion engine having a vertical crankshaft journalled in axially aligned top and bottom bearings, a crankcase and a horizontal cylinder at one side of the crankshaft: means defining an oil sump in open communication with the interior of the crankcase and hav-

ing a portion thereof near the bottom bearing of the crankshaft; a rotatable oil slinger; means rotatably mounting the slinger with its axis disposed at an acute angle to an axis parallel to that of the crankshaft and with part of the slinger disposed in that portion of the oil sump near the bottom bearing and extending beneath the normal oil level; and a geared driving connection between the crankshaft and said rotatable slinger, so that the slinger rotates during operation of the engine and acts to throw oil from the sump upwardly into the crankcase interior to lubricate the moving engine parts therein.

2. In an internal combustion engine having a vertical crankshaft, a crankcase, axially aligned top and bottom bearings in which the crankshaft is journalled, and a horizontal cylinder at one side of the crankshaft: means defining an oil sump in open communication with the interior of the crankcase, said oil sump having its bottom on a level below that of the bottom bearing; a rotatable oil slinger; means rotatably mounting said oil slinger with its axis disposed at an acute angle to an axis parallel to that of the crankshaft and at that side of the crankshaft opposite the cylinder and with the lower portion of the slinger contiguous to the bottom of the oil sump so as to dip down into the oil contained therein, the angular disposition of the slinger positioning the same so that the oil flung upwardly thereby as the slinger rotates is thrown up into the interior of the crankcase and against the moving engine parts therein; and a driving connection between the crankshaft and said rotatable slinger through which the slinger is rotated during operation of the engine.

3. In an internal combustion engine, the structure set forth in claim 2 further characterized by the fact that the driving connection between the crankshaft and the slinger comprises one of the timing gears of the engine, and gear teeth on the underside of the slinger meshing with said timing gear.

4. In an internal combustion engine of the horizontal type having a crankshaft and a cam shaft rotating on vertical axes, top and bottom bearings in which the crankshaft and cam shaft are journalled, a crankcase and a horizontally disposed cylinder at one side of the crankshaft: a removable pan-like cover plate closing the bottom of the crankcase and defining an oil sump in open communication with the interior of the crankcase; upstanding bosses rising from the bottom of said cover plate in which the lower bearings for the crankshaft and cam shaft are mounted, the top of said bosses being a substantial distance above the bottom of said sump so as to be above the normal oil level; timing gears on the crankshaft and cam shaft directly above the tops of said bosses; a rotatable oil slinger; means rotatably mounting the slinger with its axis at an angle to the axis of one of said shafts and at the side thereof opposite the cylinder and with the lower portion of the rotatable slinger contiguous to the bottom of the oil sump and its upper portion contiguous to the timing gear on said shaft; and gear teeth on the slinger meshing with said timing gear so that during operation of the engine the slinger rotates to lift oil from the sump and throw it upwardly into the interior of the crankcase.

5. In an internal combustion engine having a vertical crankshaft, a crankcase and a horizontal cylinder at one side of the crankcase: means defining an oil sump in open communication with the interior of the crankcase, said oil sump having its bottom spaced a substantial distance below the cylinder; a rotatable oil slinger having a plurality of vane-like projections thereon; means rotatably mounting said oil slinger at the side of the crankshaft opposite the cylinder with the axis of the slinger disposed at an acute angle to that of the crankshaft and with one side of the orbit of said projections adjacent to the bottom of the sump and the opposite side of said orbit closer to the axis of the crankshaft and projecting partway into the crankcase and pointing towards the cylinder so that upon rotation of the slinger oil is thrown from the sump into the crankcase interior toward the cylinder to lubricate the moving engine parts therein; and a driving connection between the slinger and the crankshaft.

6. In an internal combustion engine of the type having a crankcase, a crankshaft rotatable on a vertical axis in main bearings mounted in the walls of the crankcase, and an oil seal between the crankcase and the crankshaft beneath the lowermost main bearing to prevent leakage of oil out of the interior of the crankcase: means defining an oil sump at one side of the crankcase in open communication with the interior of the crankcase and having its bottom below the level of said oil seal, so that oil tends to drain from the crankcase into said sump, thereby preventing oil leakage out of the crankcase when the engine is idle; a disc-like rotatable oil slinger having a plurality of paddle-like projections spaced from its axis; means rotatably mounting said oil slinger with its axis disposed at an acute angle to that of the crankshaft and with one side of the orbit of said projections adjacent to the bottom of said sump and the opposite side of said orbit closer to the axis of the crankshaft; gear teeth on the surface of said oil slinger which faces the crankshaft; and a gear rotatably driven by the crankshaft and meshing with the gear teeth on said oil slinger to rotate the slinger during operation of the engine and thus cause the projections thereon to throw oil from the sump into the crankcase interior to lubricate the moving parts therein.

HUGH S. BROWN.

References Cited in the file of this patent

UNITED STATES PATENTS

Number	Name	Date
1,326,833	Bair	Dec. 30, 1919
2,539,619	Goodall	Jan. 30, 1951

Nov. 9, 1954 L. J. LECHTENBERG 2,693,789

AIR-COOLED INTERNAL-COMBUSTION ENGINE

Filed May 11, 1953 9 Sheets-Sheet 1

Fig. 1.

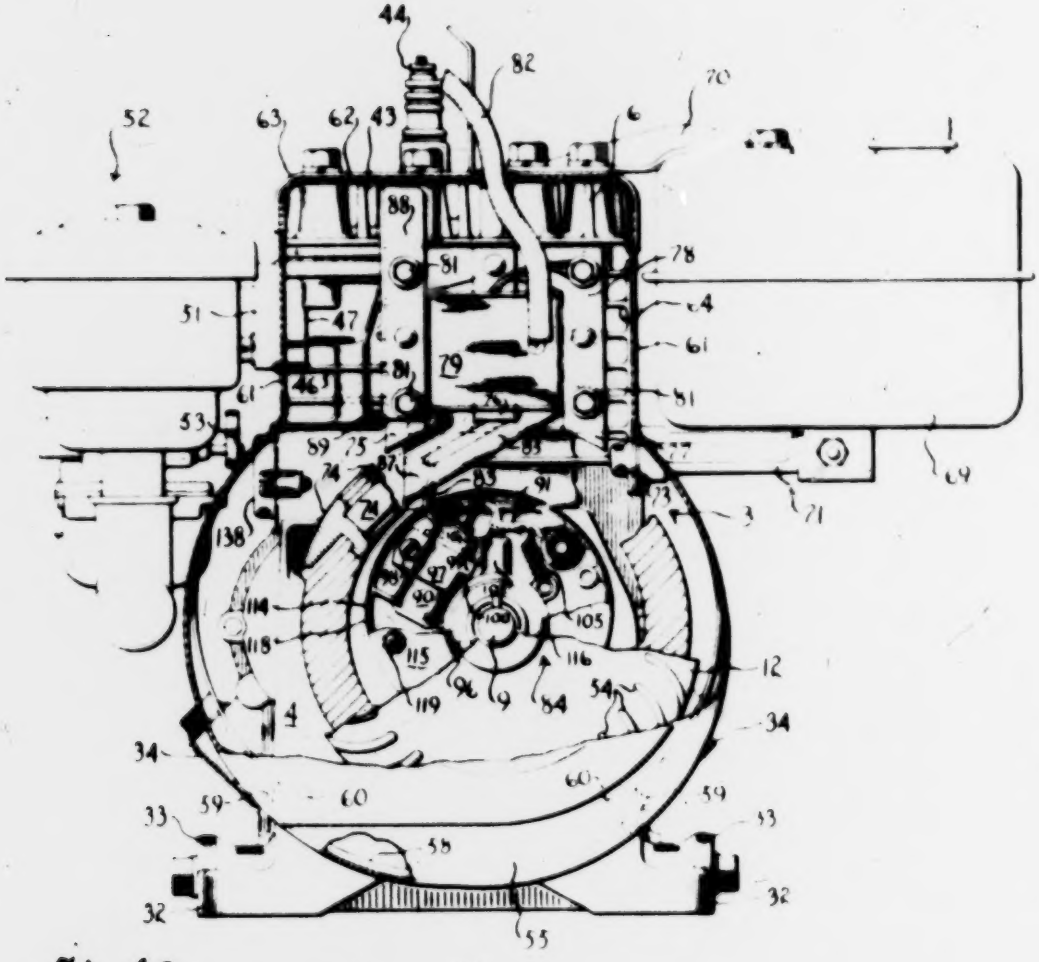

Fig. 1a.

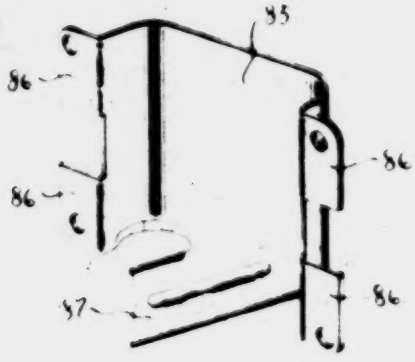

Inventors
Leo J. Lechtenberg
Joseph R. Harkness
By Sidney Hutton Jones
Attorney

Nov. 9, 1954 L. J. LECHTENBERG 2,693,789

AIR-COOLED INTERNAL-COMBUSTION ENGINE

Filed May 11, 1953 9 Sheets-Sheet 2

Fig. 2.

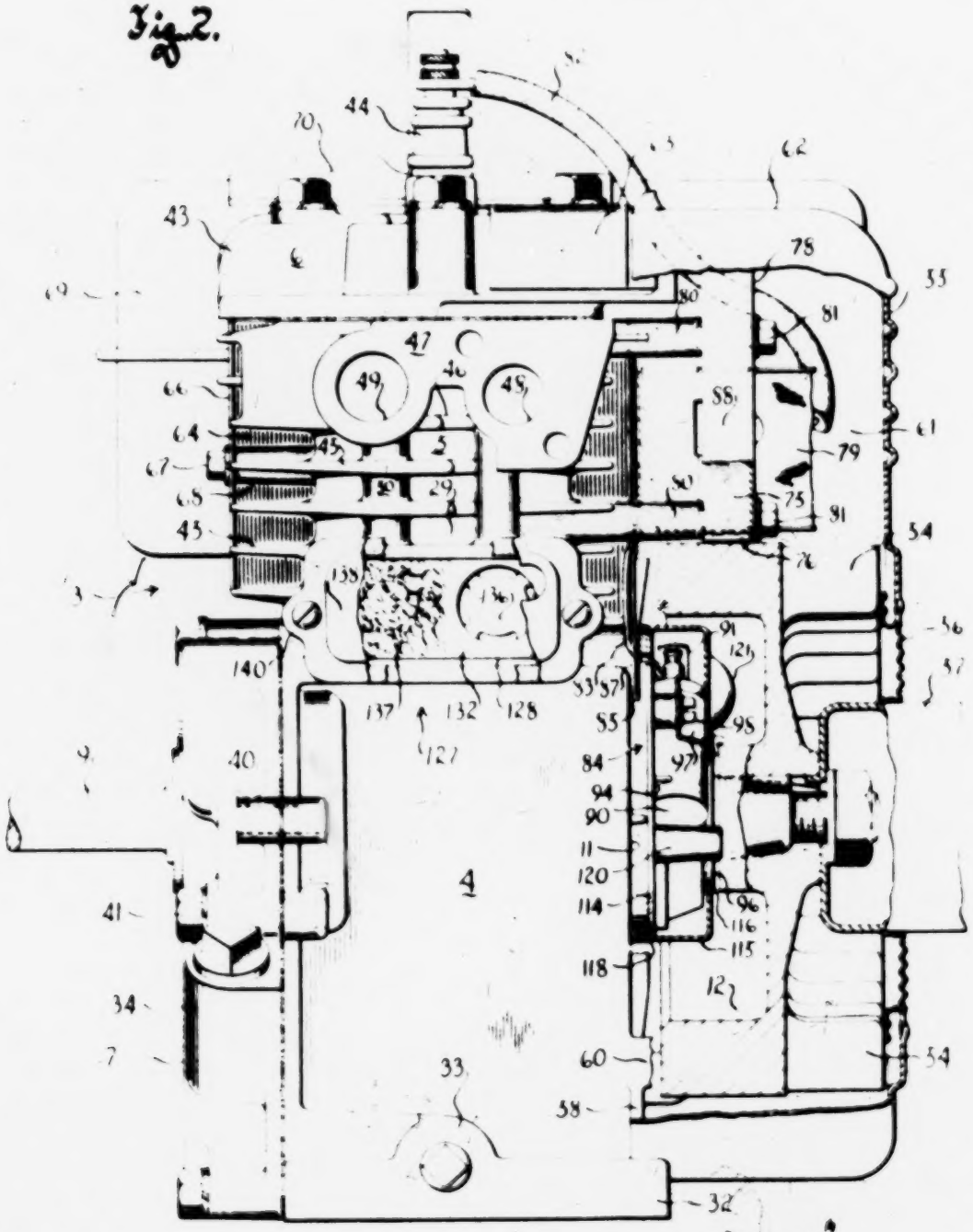

Inventors
Leo J. Lechtenberg
Joseph F. Herkness
By [illegible]
Attorneys

Nov. 9, 1954 L. J. LECHTENBERG 2,693,789

AIR-COOLED INTERNAL-COMBUSTION ENGINE

Filed May 11, 1953 9 Sheets-Sheet 3

Fig. 3.

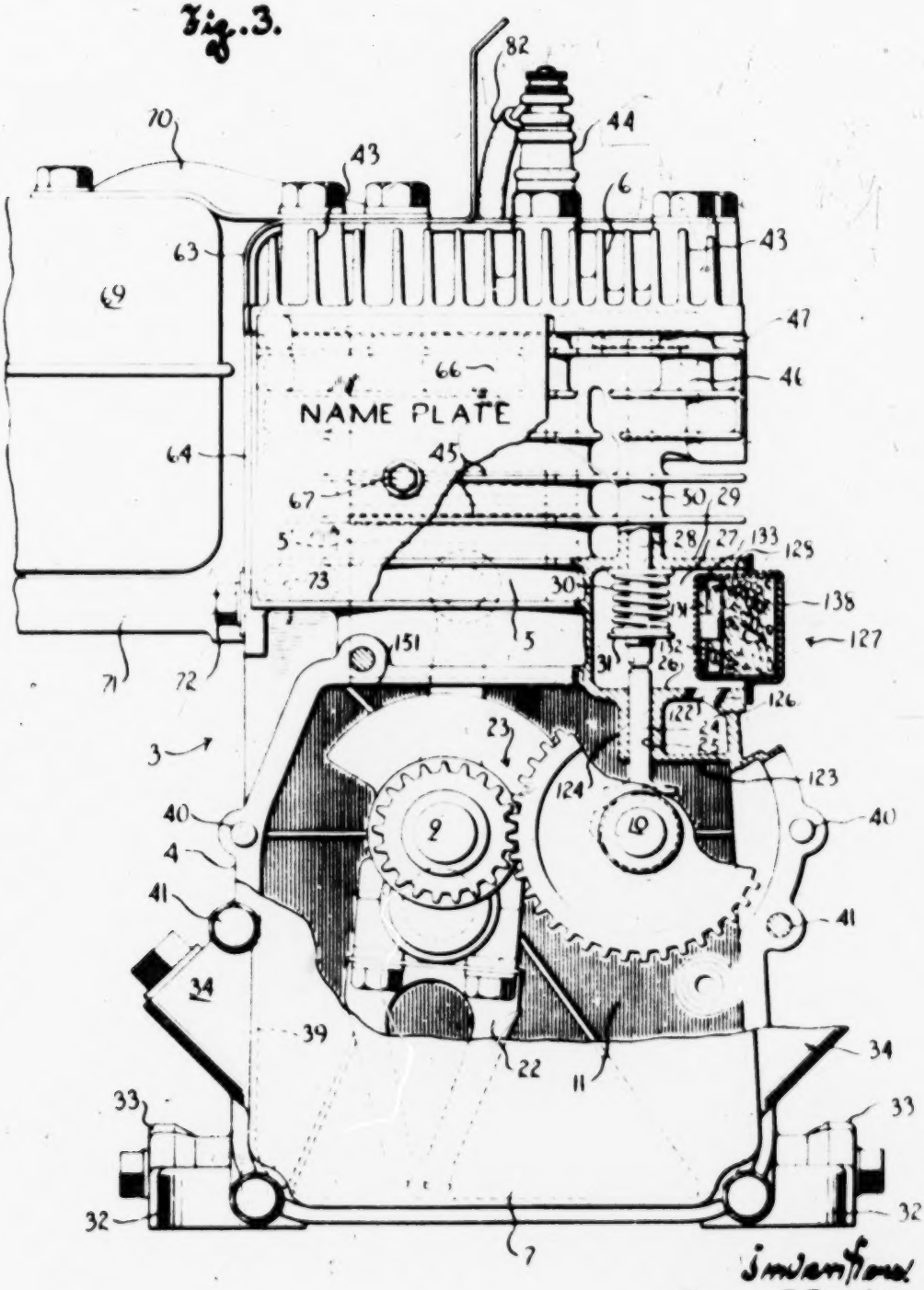

Inventors
Leo J. Lechtenberg
Joseph R. Herkness
By Ira Milton Jones
Attorney

Nov. 9, 1954 L. J. LECHTENBERG 2,693,789

AIR-COOLED INTERNAL-COMBUSTION ENGINE

Filed May 11, 1953 9 Sheets-Sheet 4

Fig. 4.

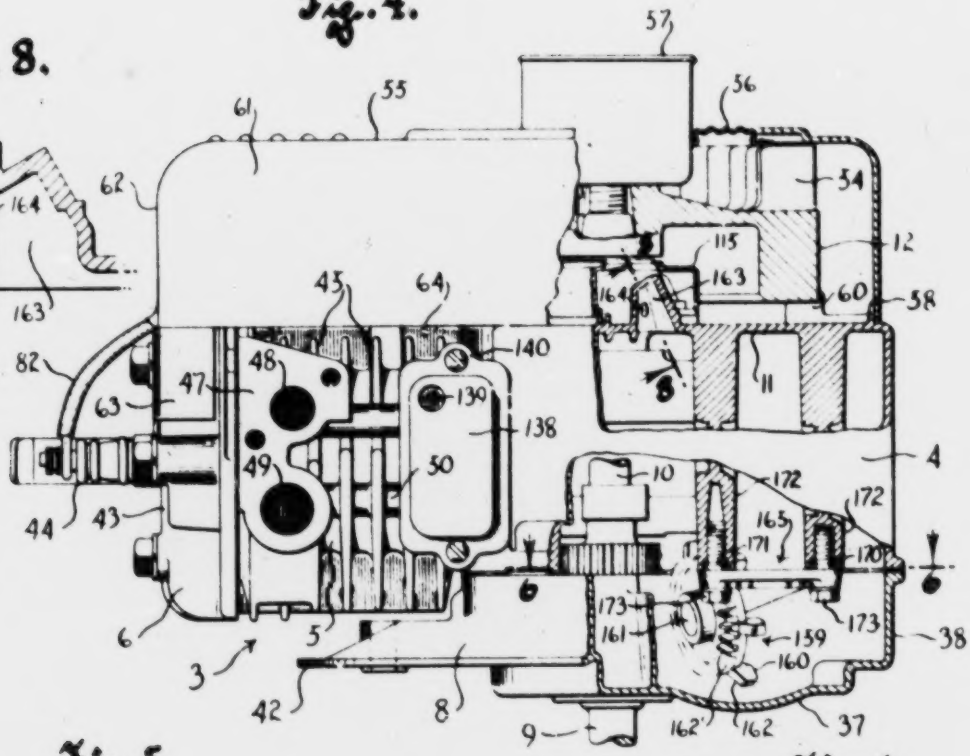

Fig. 8.

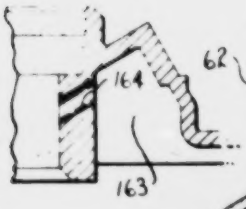

Fig. 5.

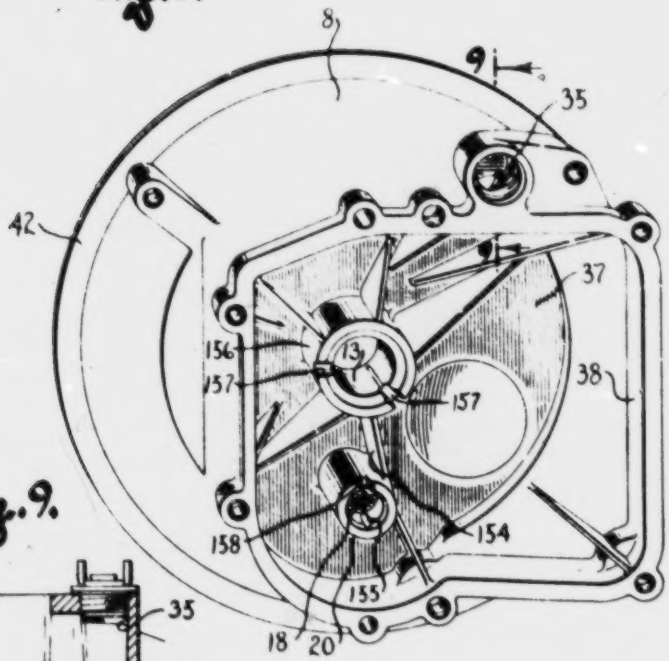

Fig. 6.

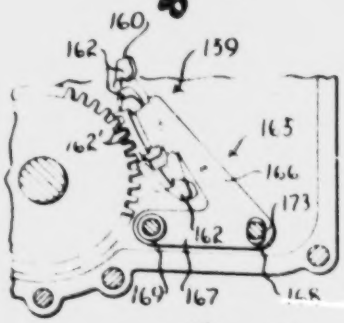

Fig. 7.

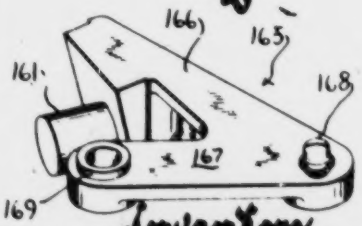

Fig. 9.

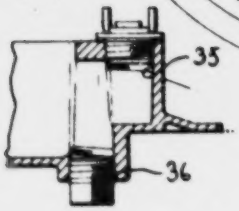

Inventors
Leo J. Lechtenberg
Joseph R. Harkness
By Ira Milton Jones
Attorney

Nov. 9, 1954 L. J. LECHTENBERG 2,693,789

AIR-COOLED INTERNAL-COMBUSTION ENGINE

Filed May 11, 1953 9 Sheets-Sheet 5

Fig. 12.

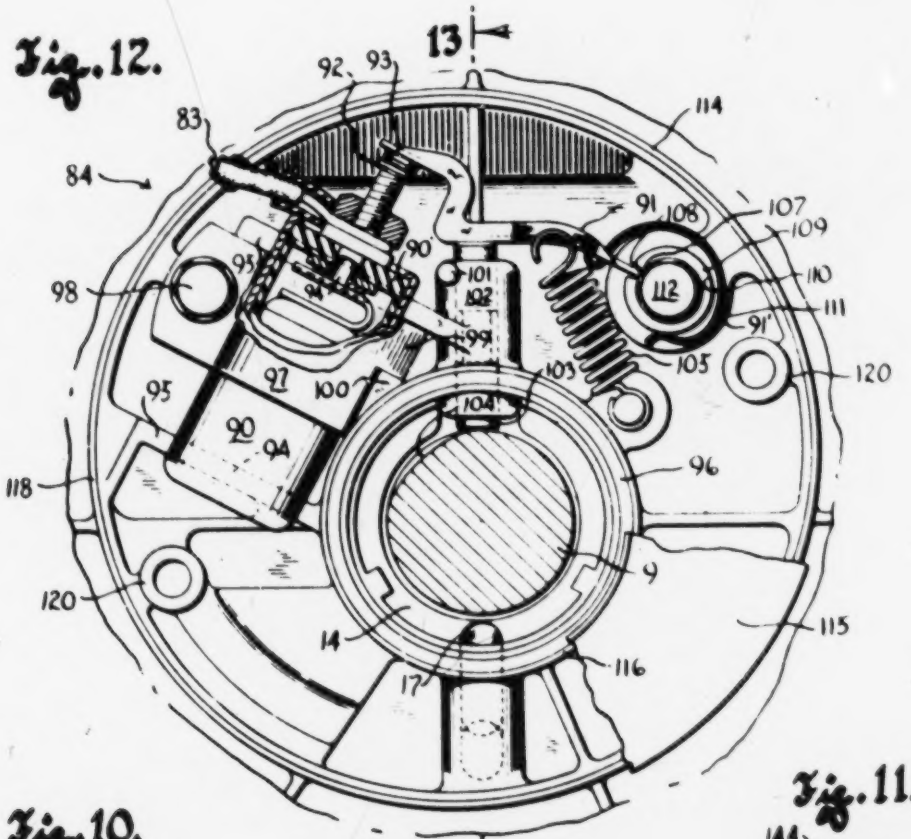

Fig. 10.

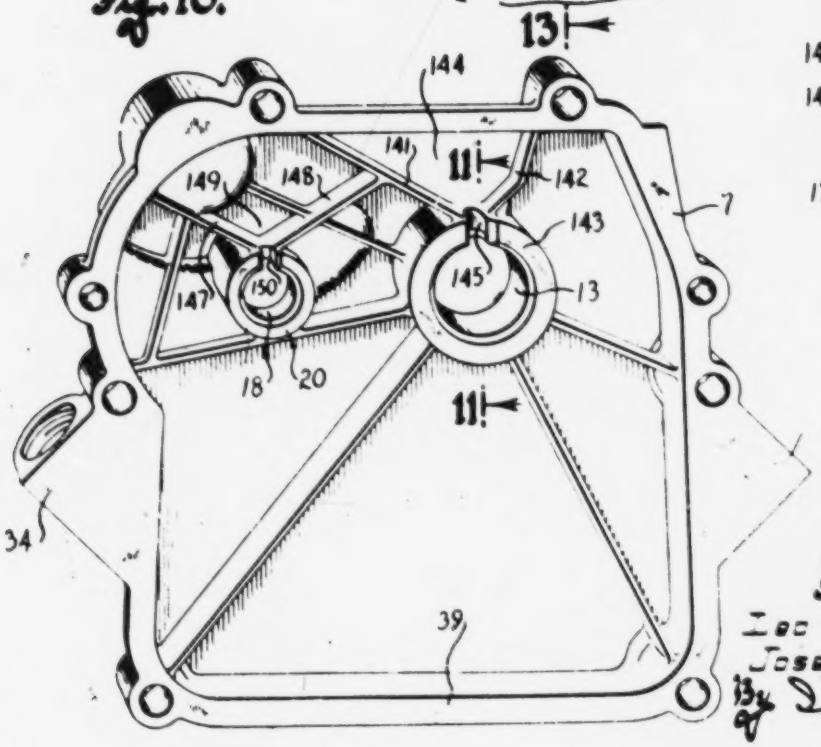

Fig. 11.

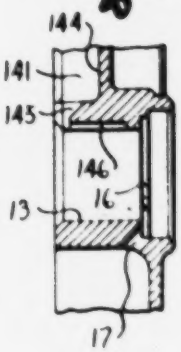

Inventors
Leo J. Lechtenberg
Joseph R. Herkness
By Dodge, Hamilton & Jones
Attorneys

Nov. 9, 1954 L. J. LECHTENBERG 2,693,789

AIR-COOLED INTERNAL-COMBUSTION ENGINE

Filed May 11, 1953 9 Sheets-Sheet 6

Fig. 15.

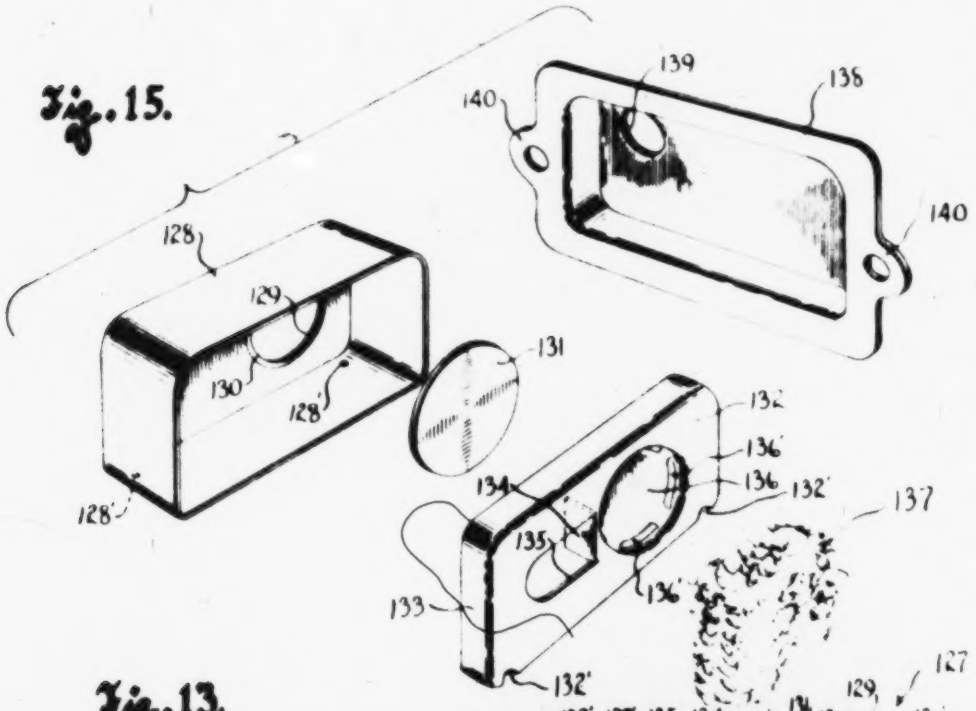

Fig. 13.

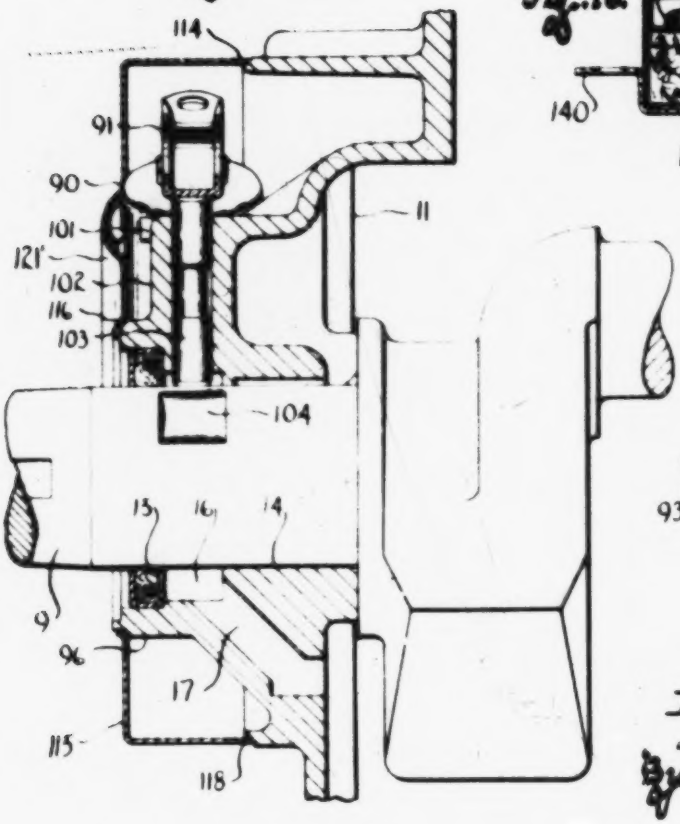

Fig. 16.

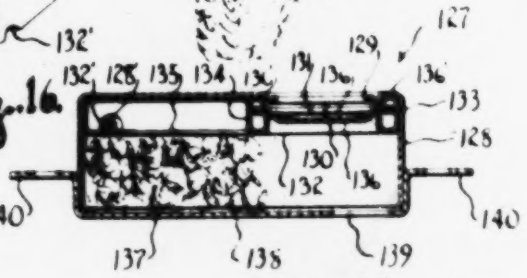

Fig. 14.

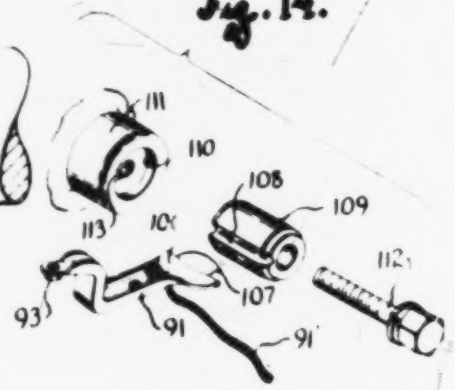

Inventors
Leo J. Lechtenberg
Joseph R. Harkness
By Ira Milton Jones
Attorney

Nov. 9, 1954 L. J. LECHTENBERG 2,693,789

AIR-COOLED INTERNAL-COMBUSTION ENGINE

Filed May 11, 1953 9 Sheets-Sheet 7

Fig. 17.

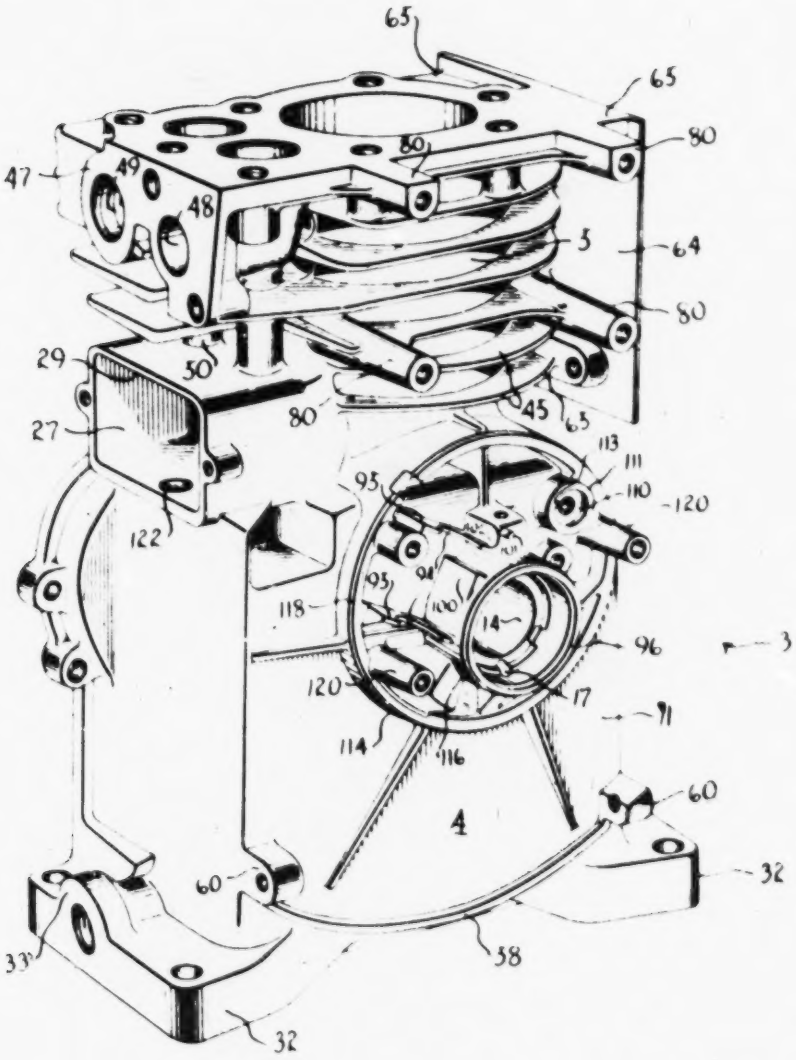

Inventors
Leo J. Lechtenberg
Joseph R. Harkness
By Dick Hilton Jones
Attorney

Nov. 9, 1954 L. J. LECHTENBERG 2,693,789

AIR-COOLED INTERNAL-COMBUSTION ENGINE

Filed May 11, 1953 9 Sheets-Sheet 8

Fig. 20.

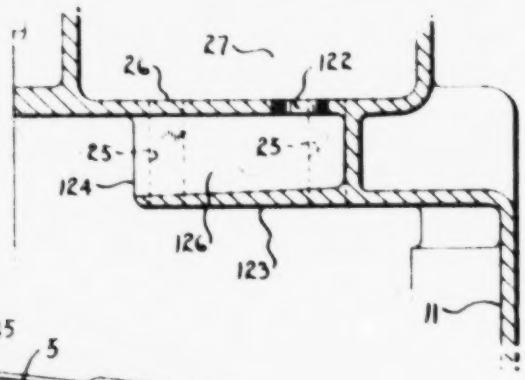

Fig. 18.

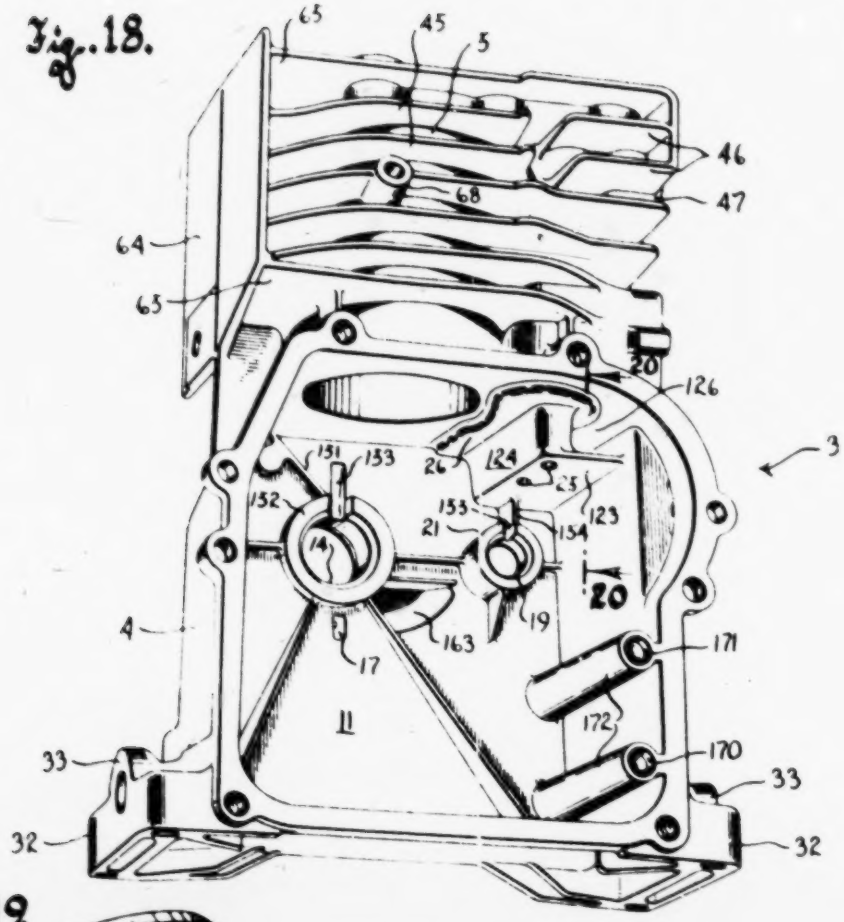

Fig. 19

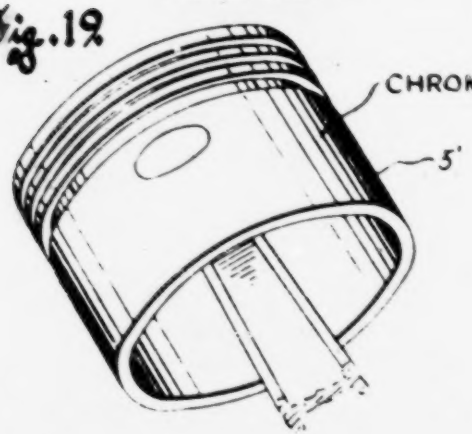

Inventors
Leo J. Lechtenberg
Joseph R. Herkness
By Dodge, Smith & Jones
Attorneys

Nov. 9, 1954 L. J. LECHTENBERG 2,693,789

AIR-COOLED INTERNAL-COMBUSTION ENGINE

Filed May 11, 1953 9 Sheets-Sheet 9

Fig. 21.

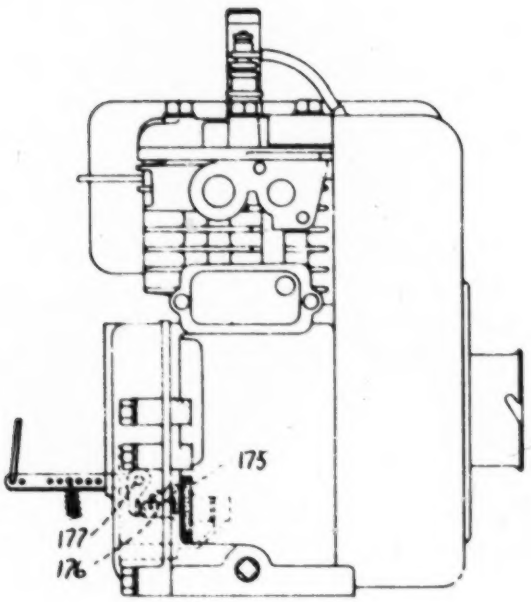

Fig. 22.

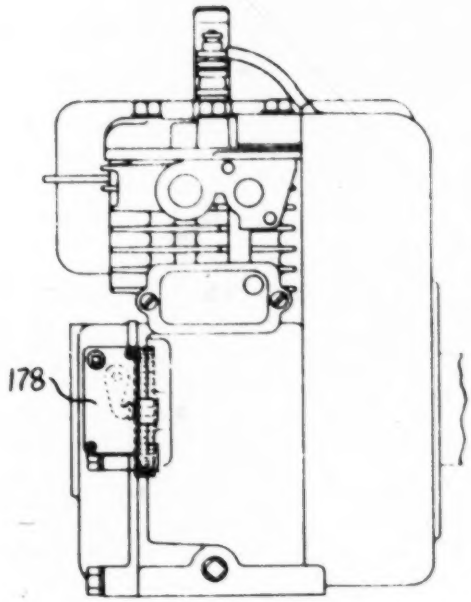

Fig. 23.

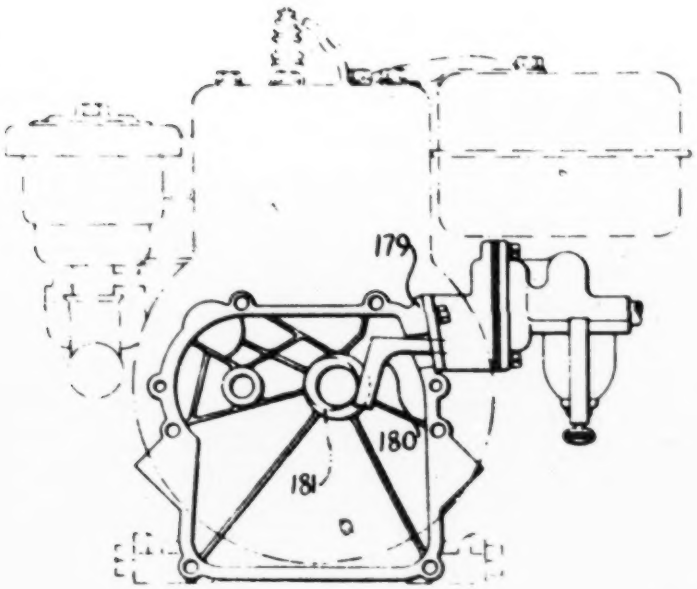

Inventors
Leo J. Lechtenberg
Joseph R. Harkness
By Trabutton Jones
Attorney

United States Patent Office

2,693,789

Patented Nov. 9, 1954

2,693,789

AIR-COOLED INTERNAL-COMBUSTION ENGINE

Leo J Lechtenberg, Milwaukee, Wis., assignor to Briggs & Stratton Corporation, Milwaukee, Wis., a corporation of Delaware

Application May 11, 1953, Serial No. 354,056

16 Claims. (Cl. 123—195)

This invention relates to internal combustion engines and refers more particularly to single cylinder, air cooled, four-stroke cycle engines of the type widely used on power lawn mowers and many other well-known appliances.

Manufacturers of such engines are constantly being beseached by producers of power lawn mowers and other portable appliances and equipment to reduce the weight and price of their engines. The entire engine industry is thus well aware of the urgent demand made upon it to produce a lighter, less expensive engine but, of course, the attainment of this o[illegible]tive may not be at a sacrifice of power output, reliabili[illegible] ruggedness.

The underlying and motivating objective of this invention thus is to produce an engine which delivers more horsepower per dollar of cost and pound of weight than has heretofore been achieved.

Cost reduction obviously can be attained by simplification of the engine and by reducing the number of component parts requiring assembly. With a view toward taking full advantage of this expedient, the present invention has as its purpose to provide an internal combustion engine of the character described wherein many of the individual component parts of engines as they had been built before are an integral part of either one of two main castings which together with the cylinder head comprise the body of the engine.

More specifically, it is the purpose of this invention to provide an engine wherein a single main casting, which may be either a die casting or a sand casting, provides not only the cylinder with its encircling heat dissipating fins, and all but one wall of the crankcase, but in addition has many of the parts which heretofore were assembled as separate units as, for instance, air directing walls, oil deflecting baffles and the like, incorporated in the casting as an integral part thereof. Since the greatest economy is effected by die casting the main parts of the engine body, this form of casting is preferred over the sand casting method. Nevertheless, it will be understood that either casting method may be followed so that where the term "die casting" is used hereinafter it is not intended to rule out sand casting.

One of the features of the invention resides in the provision of an air directing wall or baffle formed as an integral part of the cylinder-crankcase casting tangentially to all of the fins on the cylinder so that a portion of the die in which this wall is cast may be used as a large capacity gate through which the molten metal may be quickly passed into the cylinder-forming part of the die. This assures the desired metal density in the cylinder walls where casting defects would be most serious.

In keeping with the overall objective of reducing the cost of the engine and simplifying its assembly, it is another object of this invention to use the metal name plate with which engines have always been equipped to form part of the air directing means, and to this end the name plate is fastened to the side of the cylinder with one edge thereof contiguous to the baffle which is cast integral with the cylinder and extends across an adjacent side of the cylinder.

Another very important way in which the cost of the engine can be reduced is by so designing and constructing the engine that it may be adapted to a wide variety of uses with a minimum amount of change in its construction.

Heretofore the ordinary single cylinder, internal

combustion engine was so designed that to adapt the same to different uses often entailed an entirely new cylinder-crankcase casting. This would rule out die casting and the obvious savings effected thereby since the cost of the dies involved would be prohibitive. By contrast, the engine of this invention is so designed that it may be adapted to a wide variety of uses without in anywise changing the cylinder-crankcase casting. Only the cover of the crankcase need be changed, and since the dies involved in the production of the cover castings are by no means as complicated and expensive as those required for the cylinder-crankcase casting, even die casting the cover units is feasible, and for shorter runs where the cost of tooling up is not warranted, sand castings may be employed for the covers.

To illustrate how easily the engine of this invention may be adapted to different uses, it might be noted that the adaptation of an engine intended for ordinary general utility with the engine operating in an upright fashion, that is with its cylinder vertical, to horizontal operation as in rotary type lawn mowers, merely requires the simple substitution of one cover casting for another. By the same token the engine can be adapted to many different types of horizontal and vertical mountings, and to various special uses, as will be hereinafter more fully described.

Since lubrication of an engine operating with its cylinder horizontal presents problems not encountered when the engine is operating in a vertical position, the side of the engine which is lowermost (in the horizontal position of the engine) must be constructed to provide an oil sump and since changes in the cylinder-crankcase casting are to be avoided, this side of the engine is formed by the crankcase cover, which as noted before, may be designed to satisfy any requirement. Also, means must be provided to lift the oil from the sump to the bearings in which the crankshaft and cam shaft turn. While this can, of course, be done by a pump, in the interests of economy it is desirable to avoid the use of a pump, and accordingly this invention employs the oil slinger which forms the subject matter of the pending application Serial No. 296,393, filed June 30, 1952, now Patent No. 2,669,322.

With a view toward simplifying the assembly of the slinger and assuring more efficient operation thereof, this invention has as another of its objects to provide a simple mounting bracket for the slinger which may be quickly secured to a wall of the crankcase and automatically located, during its securement, in a predetermined position which will assure the proper location of the oil slinger, both with respect to the bearings it serves and the timing gear which drives it.

Another object of this invention is to provide added assurance against oil leakage from the crankcase through the necessary breather opening, and in this connection it is a further object of the invention to afford such assurance by the simple expedient of a properly placed baffle cast integral with the crankcase.

With a view toward improving the air breather for the crankcase it is another object of this invention to vent the crankcase through a pocket or compartment in which the valve springs are located and with which the tappet openings communicate, and to control the flow of air to and from this valve spring pocket or compartment by means of a novel breather valve assembly formed as a cover for the valve spring compartment.

Again with a view toward achieving utmost simplicity and reducing assembly time to a minimum, this invention has as another of its objects to provide an improved manner of mounting the elements of the magneto ignition system upon the engine.

In this connection it is another object of this invention to provide a simple stamped sheet metal heat shield between the cylinder and the ignition coil which is clamped in place by the attachment of the coil armature to the side of the crankcase with a part thereof arranged to protect the lead to the breaker mechanism from contact with the flywheel.

Still another object of this invention is to provide a novel breaker mechanism wherein the stationary contact is mounted on one end of the condenser to thereby obviate

the need for providing a special insulated mounting for the stationary contact and at the same time enable the condenser mounting to be used for adjustment of the breaker point spacing.

In this connection it is a still further object of the invention to achieve simplicity and low cost by casting mounting means for the condenser and the breaker mechanism integrally with the crankcase casting.

Still another object of this invention is to provide a simple stamped sheet metal dust cover for the breaker mechanism which is held in place by two screws and upon being secured in place automatically coacts with portions of the casting wall upon which it is mounted to effect a tight fit.

With the above and other objects in view, which will appear as the description proceeds, this invention resides in the novel construction, combination and arrangement of parts substantially as hereinafter described and more particularly defined by the appended claims, it being understood that such changes in the precise embodiment of the hereindisclosed invention may be made as come within the scope of the claims.

The accompanying drawings illustrate one complete example of the physical embodiment of the invention constructed according to the best mode so far devised for the practical application of the principles thereof, and in which:

Figure 1 is an end view of the engine of this invention viewing the same from the flywheel end of its crankshaft, parts of said view being broken away to show structural details;

Figure 1A is a perspective view of the heat shield located between the ignition coil and the adjacent side of the cylinder;

Figure 2 is a side view of the engine shown in Figure 1 with parts thereof broken away and in section and with the carburetor removed for clarity;

Figure 3 is a view of the power take-off end of the engine, with a substantial part of the crankcase cover broken away and parts of the cylinder-crankcase casting broken away and shown in section;

Figure 4 is a side view of the engine adapted for horizontal operation, that is, with its cylinder horizontal and showing the same equipped with a crankcase cover especially designed to adapt the engine for use as the power unit of a rotary type lawn mower, parts of said view being broken away and shown in section to better illustrate structural details;

Figure 5 is a perspective view of the crankcase cover casting by which the engine is adapted for use with its cylinder horizontal;

Figure 6 is a fragmentary detail sectional view taken through Figure 4 on the plane of the line 6—6 and illustrating particularly the manner in which the oil slinger is mounted;

Figure 7 is a perspective view of the mounting bracket for the oil slinger;

Figure 8 is a fragmentary detail sectional view through Figure 4 on the plane of the line 8—8 and illustrating the pocket in the upper wall of the crankcase into which oil is thrown by the slinger to feed the upper crankshaft bearing;

Figure 9 is a fragmentary detail sectional view through Figure 5 on the plane of the line 9—9 and illustrating the oil filler and drain ports;

Figure 10 is a perspective view of the crankcase cover used when the engine is intended for general utility with the cylinder in a vertical position;

Figure 11 is a fragmentary detail sectional view through Figure 10 on the plane of the line 11—11;

Figure 12 is a sectional view through the flywheel end of the crankshaft illustrating the magneto assembly of the engine, the major portion of the cover therefor being broken away;

Figure 13 is a detail sectional view through Figure 12 on the plane of the line 13—13, but to better illustrate the manner in which the breaker mechanism of the magneto is operated this view showes the crankshaft turned 90 degrees from the position in which it is shown in Figure 12;

Figure 14 is a perspective view of the breaker arm and the mounting therefor illustrating the parts disassembled;

Figure 15 is an exploded perspective view of the air breather assembly through which the crankcase interior is vented;

Figure 16 is a longitudinal sectional view through the air breather assembly;

Figure 17 is a perspective view of the crankcase-cylinder casting viewing the same from the side thereof at which the magneto is located;

Figure 18 is a perspective view of the cylinder-crankcase casting from the other side and looking into the interior of the crankcase;

Figure 19 is a perspective view of the piston;

Figure 20 is a detail sectional view through Figure 18 on the plane of the line 20—20;

Figure 21 is a side view of the engine illustrating the manner in which a mechanical governor may be applied to the engine in lieu of the air vane governor ordinarily used, without in anywise affecting the crankcase-cylinder casting;

Figure 22 is a side view of the engine showing the application of an externally located breaker mechanism, also without need for altering the crankcase-cylinder casting; and

Figure 23 is a view looking into the crankcase cover with the outline of the engine illustrated in broken lines and showing the manner in which a fuel pump may be added and operated without altering the crankcase-cylinder casting.

Referring now particularly to the accompanying drawings in which like numerals indicate like parts throughout the several views, the numeral 3 designates generally the crankcase-cylinder casting of the engine, consisting of a crankcase portion 4 and a cylinder 5. This main casting together with a cylinder head 6 and a crankcase cover casting 7 or 8 (depending upon the intended use of the engine) comprises the entire body of the engine. For ordinary general utility where an upright disposition of the engine is desirable, the crankcase cover 7 is used, but where the engine is intended to operate with its cylinder axis horizontal as in the driving units of rotary type lawn mowers, the cover 8 is used. These covers are best illustrated respectively in Figures 10 and 5.

The bearings for the engine crankshaft 9 and its cam shaft 10 are mounted in the cover casting and the end wall 11 of the crankcase-cylinder casting opposite the cover, and to enable adapting the engine to any one of a wide variety of uses without need for changing the crankcase-cylinder casting the flywheel 12 is mounted upon the end of the crankshaft which protrudes from the casting wall 11 and the opposite power take-off end of the crankshaft protrudes from the cover casting regardless of which of the two types of covers is employed.

The crankcase-cylinder casting 3, the cylinder head 6 and the crankcase cover 7—8 are cast of aluminum alloy, preferably as die castings, and the crankshaft and cam shaft run directly in bearings bored in the cover casting and the opposite wall of the crankcase-cylinder casting. In other words, the bearings are not bushed, but can be bored out to receive bushings (not shown) after the engine has been in service long enough to cause serious bearing wear.

The crankshaft bearings 13 and 14 are each equipped with an oil seal 15 mounted in a counterbore at the outer end of the bearing to prevent loss of oil from the crankcase, and each of these bearings has an annular oil collecting chamber 16 inwardly of its oil seal to receive the oil which flows outwardly along the shaft. Oil which accumulates in these collecting chambers is returned to the crankcase interior by passages 17.

The cam shaft bearings 18 and 19 formed respectively in the crankcase cover and the opposite wall 11 are likewise bushingless, but as distinguished from the crankshaft bearings do not extend through the crankcase walls. Instead these cam shaft bearings are formed by wells closed at the bottom and provided largely by bosses 20 and 21, respectively, projecting inwardly from the casting walls.

The crankshaft is of conventional construction but the piston 5' though of conventional design and cast of aluminum alloy is distinguished by the fact that it is plated with chromium or some other suitably hard wearing metal. By this expedient it is possible to have both the cylinder and the piston formed of the same basic die casting metal without incurring the cost of lining or plating the cylinder wall, for contrary to previous belief, it has been conclusively demonstrated that the piston rings will not unduly wear a naked, unprotected aluminum alloy cylinder wall. The saving thus effected is substantial since to plate the

piston costs but a fraction of what it costs to either plate or line the cylinder wall.

The cam shaft 10, which is of conventional construction is driven from the crankshaft by the usual set of timing gears 23 which are located adjacent to the crankcase cover, and when the engine is intended for general utility, the connecting rod has an oil splashing dipper 22 secured thereto to effectively splash the oil contained in the crankcase up into all parts of the crankcase interior and into the cylinder.

Valve tappets 24 operated by the cam shaft are slidably received in relatively long holes 25 drilled through a wall 26 of the crankcase-cylinder casting. The outer ends of these holes open to a valve spring pocket or compartment 27 in which the tappets abut the valve stems 28 to lift the valves in the customary manner. The valve stems enter the compartment 27 through its top wall 29 and the valve springs 30 are confined between this top wall 29 and spring seats 31 on the lower ends of the valve stems.

The valve spring pocket or compartment 27 not only affords a convenient enclosure for the valve springs but, as will be hereinafter more fully described, forms part of the means by which the crankcase interior is ventilated.

If the engine is intended for operation with its cylinder vertical the crankcase-cylinder casting 3 is provided with integral mounting feet 32 and bosses 33 at opposite sides of the casting, either one of which may be drilled and tapped to provide an oil drain port. But when the engine is intended for operation with its cylinder axis horizontal, the feet and drain port are not needed and hence those portions of the die or mold in which the feet and bosses 33 are formed would be blocked off. Also, when the engine is intended for general utility and the cover 7 is employed the oil filler port may be located at either side of the engine, and to provide for such alternate location the cover casting 7 has a pair of bosses 34 either of which may be drilled and tapped to provide the oil inlet port.

If the engine is intended for operation with its cylinder horizontal and the other cover casting 8 is used both the oil inlet port 35 and the oil drain port 36 are in the cover casting as best shown in Figures 5 and 9. These two ports are disposed in parallel juxtaposition, one extending down from the top of the cover casting and the other extending up from the bottom thereof so that in drilling out the ports they are communicated with one another and with the interior of the cover which has a relatively deep dish-shaped formation with a bottom wall 37 and side walls 38 extending upwardly therefrom. The gasket face formed by the outer edges of the side walls 38 has the same shape as the gasket face formed by the edges of the side walls 39 of the cover casting 7 so as to interchangeably fit the open side of the crankcase. Regardless of which cover is employed it is accurately located by dowel pins 40 and secured in place by screws 41.

If the engine is intended for use as the power unit of a rotary type lawn mower the cover casting 8 has a mounting flange 42 cast integrally therewith. This flange seats upon and is secured to the deck of the lawn mower (not shown) to firmly mount the engine with the power take-off end of its crankshaft extending down below the deck.

The cylinder head 6 is of conventional construction with cooling fins 43 cast integrally therewith, and has the usual spark plug 44 mounted therein. The cylinder cooling fins 45 are cast integrally with and encircle the cylinder 5, and cooling fins 46 are cast integrally with a boss-like portion 47 of the crankcase-cylinder casting in which the intake port 48 and the exhaust port 49 are located, the fins 46 being in line with the adjacent cylinder cooling fins 45. Below the boss-like portion 47 the cylinder fins 45 are extended to also embrace the portion 50 of the crankcase-cylinder casting in which the stem 28 of the exhaust valve slides.

The boss-like portion 47 provides a flat face against which an attaching flange 51 of the carburetor indicated generally by the numeral 52 is bolted. The carburetor with its air cleaner is one complete fully assembled unit, the placement of which on the engine requires no more than the fastening of the flange 51, the connection of the gas line and the connection of a driving link (not shown) between the customary air vane governor and the throttle valve crank 53.

The flywheel 12 is equipped with the customary fan blades 54 which induce a flow of cooling air into the inlet of a shroud 55 and from the outlet thereof against the adjacent side of the cylinder. The inlet of the shroud is protected by the customary rotary screen 56 which is preferably mounted upon a rope starter pulley 57 suitably secured to the adjacent end of the crankshaft.

The inner portion of the shroud 55 is substantially cylindrical and snugly fits the underside of a correspondingly shaped ridge 58 with the adjacent edge of the shroud lying flat against the face of the casting wall 11. The shroud is held in this position by screws 59 threaded into bosses 60 on the casting. The upper portion of the shroud has substantially flat opposite side walls 61 connected by a top wall 62. The edge of this top wall is contiguous to a separate sheet metal cylinder head cover 63 disposed across the top of the cylinder head fins to direct part of the air issuing from the shroud across the top of the cylinder head between the cooling fins thereon.

At the side of the engine opposite the carburetor is a thin flat wall 64. This wall serves several purposes. It is cast integrally with the crankcase-cylinder casting and is tangentially contiguous to and joins with all of the cylinder cooling fins 45 extending laterally to opposite sides of the median plane of the engine to terminate in straight parallel edges which lie in planes substantially tangent to the cylinder cooling fins and parallel to the said median plane of the engine.

The uppermost and lowermost cylinder cooling fins have substantially triangular corner portions 65 which join with the flat wall 64 and coact therewith to define a transversely extending air passage through which flows the air leaving the adjacent portion of the shroud, the wall 64 being contiguous to the edge of the adjacent side wall 61 of the shroud so as to form in effect an extension of said shroud wall.

The air directing effect of the flat wall 64 in conjunction with the corner portions 65 of the upper and lower cooling fins is continued by the engine's customary stamped metal name plate 66. A single screw 67 secures the name plate across the side of the cylinder opposite the shroud with one edge of the name plate contiguous to the adjacent edge of the flat wall 64 and its upper and lower edges contiguous to the adjacent edges of the top and bottom cooling fins. The name plate thus coacts with the wall 64 to direct the cooling air and cause it to effectually contact the cooling fins. It will be appreciated that this arrangement eliminates the curved air shield which heretofore was separately attached to the engine.

By virtue of the fact that the wall 64 is cast integrally with the crankcase-cylinder casting and joins with all of the cylinder cooling fins in the manner described, still another very important advantage is obtained, for as will be apparent to those skilled in the die casting art, a portion of the die in which the wall 64 is cast provides an excellent gate through which the molten metal may rapidlyl flow to quickly fill up the portions of the die in which the cylinder per se is cast. This assures the desired metal density in that portion of the casting where imperfections would be most serious.

Also, since the wall 64 is thin and is joined with each of the cylinder cooling fins it provides additional extended surface for the cylinder to thus assure more rapid dissipation of the heat generated in the engine.

It should also be observed that the wall 64 serves to hold the name plate against rotation about its fastening screw. This enables the use of a single screw to hold the name plate in place and the boss 68 into which this fastening screw is threaded can be conveniently formed as an enlargement of one of the cooling fins 45.

Still another advantage of the wall 64 is the protection against breakage which it affords the cooling fins during handling of the engine before the gas tank is mounted.

The fuel tank 69 is conveniently supported by a bracket arm 70 bolted to the top of the cylinder head and a bracket 71 bolted to the outer face of the wall 64 by a screw 72 which is tapped into a boss 73 at the back of the wall 64. Hence, the wall 64 is interposed between the fuel tank and the engine cylinder and shields the fuel tank against the heat radiated from the cylinder, the heat thus intercepted by the wall 64 being carried away by the cooling air flowing across its inner surface.

The ignition system of the engine is of the flywheel magneto type and accordingly the flywheel has a permanent magnet 74 embedded in its rim, the pole pieces 74' of which sweep past the three legs 75, 76 and 77

of a laminated armature 78 having the customary coil 79 mounted upon its center leg 76. In the past where flywheel magnetos have been used on engines of this kind it has been customary to assemble the stator of the apparatus upon a mounting plate which in turn was mounted upon the engine. In the present invention the need for such plate mounting of the stator is eliminated by the fact that the stator armature is bolted directly to the side of the crankcase-cylinder casting, and to this end the casting has four supporting posts 80 extending from the side of the cylinder and into which the fastening screws 81 are screwed. The holes in the armature through which the clamping screws pass are sufficiently large to permit the armature to be adjusted as required to give equal definite air gaps between its two outer legs and the rotor.

One end of the high tension secondary of the coil is, of course, connected to the center terminal of the spark plug through the customary spark plug lead 82 and one end of the primary winding is connected by a lead 83 to one of the contacts of the breaker mechanism indicated generally by the numeral 84 and which, as will be hereinafter more fully described, embodies some rather novel features.

The lead 83 must pass under the rim of the flywheel and to protect the same against contact with the flywheel a combined heat shield and guard 85 is provided. This unit is best illustrated in Figure 1A. It is mounted in place by being clamped between the armature and the posts 80, the clamping screws 81 passing through holes in flanges 86 which extend from opposite edges of the unit. The main body of the unit lies between the coil and the adjacent side of the cylinder and thus constitutes a heat shield to protect the coil from the heat radiated by the cylinder and to aid in this function the unit is stamped from smooth surfaced aluminum or other highly reflective metal.

The wire guarding function of the unit is performed by an arm 87 projecting from the body of the unit and positioned to lie closely adjacent to the side of the engine over the lead 83 as clearly shown in Figures 1 and 2.

Two of the fastening screws 81 by which the stator armature is held in place also serve to mount a stamping 88 which provides a deflector within the air shroud and a mounting 89 for the governor vane (not shown).

The breaker assembly 84 is mounted directly upon the casting side wall 11 and comprises a condenser 90, a breaker arm 91, a pair of normally open breaker contacts or points 92 and 93 and mechanism to effect periodic engagement thereof. One of the features of the breaker mechanism resides in the fact that one of the breaker contacts is mounted directly on one end of the condenser 90. This enables the insulating bushing 90' of the condenser to serve a dual function. Not only does it insulate the ungrounded condenser terminal but also the ungrounded breaker contact. In addition this construction enables the condenser mounting to provide for the adjustment of the breaker point spacing for by sliding the condenser axially one way or the other the spacing of the breaker points is quickly and easily adjusted.

To this effect the condenser and breaker point assembly is seated in a cradle formed by round bottomed notches 94 in a pair of parallel ribs 95 cast integral with the wall 11 at one side of a hub 96. The hub 96 is also integral with the wall 11 and forms part of the bearing for the adjacent end of the crankshaft.

A strap 97 arched across the top of the condenser and drawn down tight by a clamping bolt 98 serves to hold the condenser firmly against displacement from any desired position of axial adjustment. To prevent rotation of the strap 97 about the screw 98 during the tightening thereof and during axial motion of the condenser for breaker point adjustment a projection 99 on the outer end of the strap is received between an abutment 100 and the adjacent rib 95.

Endwise adjustment of the condenser, may entail slight loosening of the screw 98. This done, a screw driver or other similar tool may be inserted between a lug 101 and the adjacent end of the condenser so that using the lug as a fulcrum the condenser may be easily slid in a direction to increase the spacing between the breaker points, and the adjacent boss 120 may be used as a fulcrum for sliding the condenser in the opposite direction to decrease the breaker point spacing.

The lug 101 projects from a boss 102 which is radial to the hub 96 and is bored to slidably receive a breaker arm operating pin 103. This pin engages the underside of the breaker arm and rides upon the adjacent surface of the crankshaft to drop down onto a cam 104 in the crankshaft and thereby enable a breaker spring 105 acting on the arm 91 to momentarily close the breaker contacts once each revolution of the crankshaft, good electrical grounding of the breaker arm being assured by a flexible jumper 91' having one end thereof secured to the arm and its other end secured to the pivot for the arm.

The manner in which the breaker arm 91 is mounted exemplifies the extent to which this invention has gone to reduce the cost of an engine and simplify its assembly. As best shown in Figure 14 the breaker arm is stamped from sheet metal and has a wide flat mounting end 106 with aligned fulcrum edges 107 which are received in a longitudinal groove 108 in a pivot post 109. The post 109 to which one end of the grounding jumper 91' is secured is stepped into a socket 110 in the outer end of a boss 111 cast as an integral part of the wall 11 and a screw 112 passing through the post 109 and threaded into the boss secures the post to the boss.

Correct angular placement of the groove 108 is assured by a small key 113 integral with the boss 111 and extending in from the side of the socket 110 to enter the adjacent end of the groove 108. This locates the post 109 and holds it from turning.

The lead 83 which connects one end of the primary coil with the breaker contact 92, of course, also connects with the adjacent terminal of the condenser, and it is to be understood that the opposite terminal of the condenser is grounded as is also the movable breaker contact (via the jumper 91') and the common terminal of the primary and secondary windings.

The entire breaker mechanism is housed within a dustproof enclosure formed conjointly by a circular rim 114 on the casting wall 11 and a stamped metal cover 115. The cover 115 is in the form of a small inverted cup having a hole in its end wall to accommodate the crankshaft. The edge of this hole is slightly flared and engages a conical edge 116 on the hub 96, and in like manner the peripheral edge of the cup fits a conical edge 118 on the circular rim 114. The parts are of such relative dimensions that upon drawing the cover down in place by two screws 119 threaded into bosses 120 extending up from the wall 11 a firm engagement is first established between the edge of its hole and the hub and thereafter the peripheral edge of the cover is pulled down onto the beveled edge 118 of the circular rim, it being understood that the bottom wall of the cover is sufficiently flexible or resilient to allow such sequential engagement. This achieves a dust-tight fit between the cover and the casting, and to complete enclosure the notch in the edge of the rim 114 through which the lead 83 enters the breaker housing is sealed with a suitable mastic.

To accommodate the mounting for the breaker arm 91 and the condenser 90 the adjacent portions of the end wall of the cover are bulged out as at 121 and 121'.

Crankcase ventilation, as hereinbefore suggested, is accomplished with a minimum loss of oil from the crank case. The need for ventilating the crankcase arises from the fact that as the piston descends it tends to compress the air in the crankcase, and as it rises on its compression stroke there is a certain amount of "blow-by" past the piston rings from the combustion chamber. Thus unless the crankcase is vented the pressure therein builds up and causes undue leakage of oil past the oil seals and gasket joints. The means provided by this invention for ventilating the crankcase not only eliminates such undesirable pressure but in fact actually produces a partial vacuum in the crankcase. To achieve this result without loss of oil from the crankcase the air is lead from the crankcase by a very tortuous passage which includes the valve spring compartment 27 and comprises a hole or port 122 in the bottom wall 26 of this compartment, a pocket 126 formed by a baffle 123 in coaction with adjacent walls of the crankcase and a novel air breather assembly 127 which forms a cover for the valve spring compartment.

As best shown in Figure 20 the port 122 is located

between the plane of connecting rod motion and the end wall 11 of the crankcase. The baffle 123 is formed as an integral part of the crankcase-cylinder casting and projects from its end wall 11 across the mouth of the port, being preferably a continuation of the bottom of the lug-like portion 124 in which the valve tappets are mounted. Since the baffle 123 extends from the casting wall 11 almost to the open side thereof it coacts with the adjacent walls of the casting to define the pocket 126 which forms a tortuous path of communication between the port 122 and a "quite" relatively oil-free zone of the crankcase interior. Hence, very little oil is carried from the crankcase through the port 122. That which does leave the crankcase through this port is trapped by the breather assembly 127 and returned to the crankcase.

The breather assembly 127, as best shown in the exploded perspective view Figure 15, comprises a stamped oblong box 128 having a hole 129 in its bottom wall, the edge of which projects slightly from the bottom wall to provide a valve seat 130. A light flutter valve 131 stamped from fiber or other suitable material coacts with the seat 130 and is loosely held in position by a partition wall 132 and a tongue 134 extending down from the partition wall toward the bottom of the box 128. The partition wall is spaced a fixed distance from the bottom wall of the box by downturned edges 133 and the tongue 134 being formed from the partition wall leaves a hole 135 through which air may freely pass from one side of the partition wall to the other.

A protrusion 136 in the partition wall 132 provided with circumferentially spaced projections 136' holds the flutter valve 131 off the partition wall and the projections keep the valve disc from sticking in its open position. The valve disc is thus always free to float to and from engagement with the valve seat 130 as the pressure in the crankcase alternates between negative and positive. This arrangement permits free expulsion of air from the crankcase and restricts influx of air to the slight amount which can pass through the hole 129 during the interval the valve disc moves from its "open" position to its "closed" position on the seat 130. However, any dirt or foreign matter entrained in the air thus entering the crankcase is trapped by a mass of keratin fiber or other filtering material 137 confined between the partition and a cover 138.

The cover 138 fits over the box 128 and has an air inlet port 139 in its end remote from the hole 135 in the partition wall to thus assure that any air flowing through the device either inward or outward must pass through the filter.

Mounting ears 140 on opposite ends of the cover provide for fastening the entire assembly in position across the mouth of the valve spring pocket or compartment with the box 128 projecting a substantial distance into the compartment as best shown in Figure 3. Any oil which is carried into the box 128 drains back into the valve spring compartment through drain holes 128' and 132' in the box and its partition wall, and these holes are so located that at least one set thereof is always effective regardless of whether the engine is operating with its cylinder vertical, inclined from the vertical, or horizontal.

The air breather assembly thus performs five important functions.

(1) It baffles out the oil remaining in the air expelled from the crankcase.

(2) It drains this oil back to the crankcase.

(3) Its flutter valve enables the maintenance of a partial vacuum in the crankcase.

(4) Its filter traps dirt which might otherwise be carried into the crankcase.

(5) It provides a cover for the valve spring compartment.

Proper lubrication of the crankshaft and cam shaft bearings is an important consideration. In vertical cylinder engines prior to this invention it was customary to mount separate baffles and oil collectors in the crankcase for collecting oil and leading it to the bearings, but with the present invention this function is performed by baffles cast integrally with the cover casting 7 and the opposite wall 11. Thus, considering first the cover 7 (Figure 10) it will be seen that ribs 141 and 142 project perpendicularly from the inner surface of the casting wall and diverge from the top of a boss 143 which forms part of the bearing 13. The ribs 141 and 142 in coaction with the wall of the casting from which they rise thus form a pocket or funnel 144 in which oil collects during operation of the engine to flow down through an opening 145 in the bearing hub into an oil groove 146.

A somewhat similar arrangement of baffle forming ribs 147 and 148 projecting perpendicularly from the inner surface of the casting wall and diverging from the top of the hub 20 provides a pocket 149 in which oil collects to flow through an opening 150 into the bearing 18. The other ribs of the cover casting 7 provide strength and also facilitate the flow of the die cast metal during the casting operation.

A somewhat similar arrangement of baffles is provided on the inner surface of the main casting wall 11 as best shown in Figure 18. Here a rib 151 extending at an angle from the top of the relatively shallow boss 152 which provides the inner end of the bearing 14 collects oil impelled by the rotation of the crankshaft and directs the oil thus collected into an oil groove 153 leading to the bearing 14. For the cam shaft bearing 19 a baffle 154 extends from the top of the boss 21 to the underside of the adjacent baffle 123 to collect the oil which tends to follow around with the cam shaft, and direct the same through a groove 155 into the bearing 19. As in the cover 7 the other ribs with which the inner surface of the wall 11 is provided are primarily for the purpose of strengthening the casting; and all of these ribs help to dissipate heat by conducting it efficiently to cooler parts of the casting.

If the engine is to operate with its cylinder axis horizontal in which event the crankcase cover 8 is used rather than the cover 7, the problem of adequately lubricating the crankshaft and cam shaft is even more difficult. In this case the cover casting 8 must provide a sump for the oil without, however, incurring the risk of losing oil through the bottom crankshaft bearing 13. Accordingly the cover 8, as described hereinbefore, has a deep dish-shaped formation with relatively high side walls 38 extending up from its bottom wall 37 and the bearing 13 is in a boss 156 which rises from the bottom wall 37 to the level of the gasket flange provided by the top edges of the side walls 38. To assure adequate lubrication of this bearing it is equipped with oil grooves having inlets 157 cut radially through the top of the boss 156 so that during operation of the engine oil can readily reach the bearing 13; however, by virtue of the height of the boss 156 leakage of oil past a defective oil seal 15 in the bottom of the bearing 13 when the engine is idle is limited to the amount above the level of the bottom of the inlets 157.

In the same manner the cam shaft bearing 18 has oil grooves with an inlet 158 leading to the bearing to permit the flow of oil thereto.

The baffles which rise from the bottom wall 37 and radiate from the bearing bosses as well as the other baffles, all of which are clearly shown in Figure 5, are principally for strengthening purposes and, of course, also help dissipate heat.

Lubrication of the upper bearings 14 and 19 is effected by an oil slinger 159 of the type disclosed and claimed in Patent No. 2,669,322. This oil slinger consists of a rotary impeller 160 journaled upon a stub shaft 161 and provided with paddles 162 and gear teeth 162' on its periphery. The gear teeth mesh with one of the timing gears so that during operation of the engine the impeller is rotated to cause its paddles to dip into the oil in the sump and throw it upwardly against the casting wall 11 which now forms the top of the crankcase. The angular disposition of the stub shaft is such that oil thrown upwardly by the paddles strikes the top of the crankcase between the bearings 14 and 19; and to facilitate the flow of the oil thus impinging the top of the crankcase to the crankshaft bearing 14 the casting wall 11 has a pocket 163 formed therein in which part of the oil thrown up by the slinger collects to be retained therein by surface tension and flow from the pocket through an oil hole 164 in the bearing wall.

For the cam shaft, enough of the oil splashed up against the top of the crankcase accumulates against the baffle 154 to flow through the oil groove 155.

Proper location of the slinger with respect to the bearings it supplies and the timing gear which drives it is, of course, important and accordingly the stub shaft

161 upon which the slinger is journaled is part of a specially designed die casting 165 (see Figure 7). This die casting has a pair of angularly disposed arms 166 and 167, the former having the stub shaft 161 formed thereon at an angle to the flat top face of the casting. At the junction of the two arms and at the outer end of the arm 167 are pilot bosses 168 and 169 respectively. These pilot bosses enter pilot holes 170 and 171, respectively, provided by counterbores in the outer ends of two post-like bosses 172 formed as an integral part of the main crankcase-cylinder casting (see Figure 18). These post-like bosses are preferably contiguous to the adjacent side wall of the casting and join therewith. The mounting bracket is held in position by screws 173 which pass through the bracket and are threaded into the post-like bosses.

This manner of mounting the oil slinger assures accurate positioning of the same and greatly facilitates the assembly of the engine since at the time that the cover plate 8 is secured to the main crankcase-cylinder casting the slinger is already in proper position whereas if the oil slinger were mounted on the cover it could not be observed during cover attachment, and might be improperly assembled. It should also be noted that this arrangement obviates the need for any special means to hold the impeller on its stub shaft, this function being performed by the cam shaft timing gear with which the impeller gear teeth 162' mesh.

As brought out hereinbefore one of the features of the invention is the fact that the engine may be easily and economically adapted to a wide variety of uses. Practically any mounting requirement or special use can be met by merely designing the crankcase cover to fit. Thus, as already clearly shown, the same engine may be adapted either to general utility (in which case the engine operates with its cylinder axis vertical), or such special purpose as driving the blade of a rotary type lawn mower (in which event the engine operates with its cylinder horizontal) by simply selecting one of two crankcase covers.

To further illustrate this unusual flexibility of adaptation attention is invited to Figures 21, 22 and 23. Figure 21 illustrates how the engine may be equipped with a mechanical governor of the type covered by Patent No. 2,382,952 without in anywise altering the crankcase-cylinder casting. For this purpose a governor gear 175 may be journaled on a shaft carried by the crankcase cover to drive the fly weights 176. Response of these fly weights to centrifugal force, as clearly described in the aforesaid patent, rocks a control shaft 177 which also is mounted in the cover and by its motion adjusts the throttle valve.

In Figure 22 there is illustrated the adaptation of an external type of breaker such as that covered by Patent No. 2,605,753, and as clearly shown the entire unit 178 is mounted upon a crankcase cover.

Even a fuel pump can be added to the engine if desired without necessitating change in the crankcase-cylinder casting for as shown in Figure 23 a pump such as that illustrated in Patent No. 2,496,688 may be readily mounted upon a pad 179 on the cover casting 7 to dispose the actuating arm 180 of the pump in proper relation to the cam 181 on the crankshaft which operates the pump.

From the foregoing description taken in connection with the accompanying drawings, it will be readily apparent that this invention to a large degree has fulfilled the demand made upon the engine industry to supply a lighter, less expensive engine without sacrificing power output, ruggedness or reliability.

What I claim as my invention is:

1. A single cylinder internal combustion engine having a crankcase with two spaced apart side walls, each of which carries a crankshaft bearing, a cylinder and a crankshaft journaled in the bearings with its ends projecting from the crankcase, one end of the crankshaft having a flywheel mounted thereon and the other end being the power take-off end of the shaft, characterized by the fact that: the cylinder and all portions of the crankcase including the wall thereof remote from and facing the cylinder, except that wall of the crankcase which carries the bearing for the power take-off end of the crankshaft is a single casting; and further by the fact that said wall of the crankcase which carries the bearing for the power take-off end of the crankshaft is provided by a cover removably secured to said casting so that said cover is interchangeable with others of different design to adapt the engine to any of a variety of different installations without necessitating alteration of the cylinder-crankcase casting.

2. A single cylinder four-stroke cycle internal combustion engine having a crankshaft, a cam shaft parallel to the crankshaft, a cylinder and a crankcase, through opposite walls of which the ends of the crankshaft pass, one end of the crankshaft having a flywheel thereon and the other end being the power take-off end of the crankshaft, characterized by the fact that: the cylinder and all portions of the crankcase including the wall thereof remote from and facing the cyclinder, except that wall of the crankcase through which the power take-off end of the crankshaft passes, is one casting; by the fact that said wall through which the power take-off end of the crankshaft passes is provided by a cover removably secured to said casting; by the fact that the crankshaft and the cam shaft are supported by said cover and the wall of the casting opposite the cover; and by the fact that the supports for the cam shaft comprise wells in the cover and said opposite wall of the casting.

3. The engine according to claim 2 further characterized by the fact that the cover and the casting wall opposite the cover have bored bosses projecting from their inner faces and comprising the supports for said shafts, said bosses having oil passages therein leading from mouths at their peripheries into their bores; and further characterized by ribs on the inner faces of the cover and the casting wall opposite the cover radiating from said bosses and coacting with the bosses and the wall surfaces from which the bosses and ribs project to form pockets at the mouths of said oil passages for accumulating and directing oil into the passages.

4. The engine defined in claim 2 further characterized by the fact that said cover has a relatively deep depression in its inner face so that when the engine is positioned to operate with its cylinder horizontal and said cover at the bottom of the engine, the depression in its inner face provides an oil sump; and characterized further by the fact that the cover has a boss projecting from its inner face and bored through to provide a bearing for the adjacent end of the crankshaft, said boss extending for substantially the full depth of the depression in the cover so that oil in the depression rising to a level substantially equal to the full depth of the depression, when the engine is used with its cylinder horizontal, will not drain out along the crankshaft when the engine is idle.

5. A single cylinder, four-stroke cycle internal combustion engine adapted for operation with its cylinder horizontal, said engine having in addition to its cylinder a crankshaft, a cam shaft parallel to the crankshaft, and a crankcase with spaced apart top and bottom walls through which the upper and lower ends of the crankshaft pass, said engine being characterized by the fact that: the cylinder and all portions of the crankcase except its bottom wall through which the lower end of the crankshaft passes is one casting; by the fact that said bottom wall comprises a cover having a relatively deep depression removably secured to the casting with the edge of the depression joining the casting on a plane parallel to said top and bottom walls and below the cylinder, by the fact that the cam shaft is supported by the cover and the top wall of the crank case and the bearings for the crankshaft are in said cover and the top wall of the crankcase; further by the fact that the depression in the cover provides an oil sump and has an oil filler port therein communicating with the depression below the top edge thereof with the mouth of the filler port on a level no higher than the edge of the depression so that the level of the oil in the sump will not be above the edge of the depression; and said cover being further characterized by a pair of bosses projecting up from the bottom of its depression, one of said bosses being bored through and providing the bearing for the lower end of the crankshaft, and the other boss having a well, closed at its bottom extending down into it and providing a support for the lower end of the cam shaft, the boss providing the lower crankshaft bearing extending substantially to the level of the edge of the depresison in the cover so that when the engine is idle the oil in the sump will not be drained therefrom through said crankshaft bearing.

6. A single cylinder, four-stroke cycle internal com-

bustion engine adapted for operation with its cylinder horizontal, said engine having in addition to its cylinder a crankshaft, a cam shaft parallel to the crankshaft, and a crankcase with spaced apart top and bottom walls through which the upper and lower ends of the crankshaft pass, said engine being characterized by the fact that: the cylinder and all portions of the crankcase except its bottom wall through which the lower end of the crankshaft passes is one casting; by the fact that said bottom wall comprises a cover, removably secured to the casting and having a relatively deep depression; by the fact that the cam shaft is supported by the cover and the top wall of the crank case and the bearings for the crankshaft are in said cover and the top wall of the crankcase; further by the fact that the depression in the cover provides an oil sump; and said cover being further characterized by mounting means formed integrally therewith for mounting the engine with its cylinder horizontal.

7. The engine defined in claim 6 but wherein said mounting means for the engine comprises a substantially circular flange on the cover having a flat downwardly facing rim concentric to the crankshaft axis and adapted to seat upon a flat surface.

8. The engine defined in claim 6 but wherein said mounting means for the engine extends from the region of the oil sump towards the cylinder head to thereby enable the mounting means to provide a large mounting area without greatly increasing the outline of the engine.

9. The engine defined in claim 5 further characterized by the provision of a rotary oil slinger having a plurality of paddles on its periphery and having gear teeth; a mounting bracket for the oil slinger having a stub shaft upon which the oil slinger is freely journaled; and means securing said mounting bracket to the cylinder-crankcase casting, with the gear teeth of the oil slinger in mesh with one of the timing gears of the engine and with the paddles dipping into the oil sump provided by the depression in the cover, said mounting bracket so positioning the oil slinger that oil thrown upwardly therefrom strikes the top wall of the cylinder-crankcase casting adjacent to the crankshaft and the cam shaft bearings therein.

10. In an internal combustion engine adapted for operation with its cylinder horizontal: a crankcase comprising complementary main and cover castings, the main casting having the cylinder of the engine cast integrally therewith, said castings being joined together on a plane of parting parallel to the cylinder axis and below the cylinder; mounting means formed integrally with the cover casting for mounting the engine with its cylinder horizontal and the cover casting therebelow, said cover casting having a relatively deep depression extending down from said plane of parting to provide an oil sump; bearings in the bottom wall of the cover casting and the top wall of the main casting for the crankshaft and the cam shaft of the engine; a rotary oil slinger having paddles on its periphery and gear teeth for meshing engagement with one of the timing gears of the engine; a mounting bracket for the oil slinger having a stub shaft upon which the oil slinger is freely journaled; and means securing said mounting bracket to the main casting in position to have the gear teeth on the oil slinger mesh with one of the timing gears of the engine and with the paddles traveling in an orbit which projects a substantial distance down into the oil sump in the cover casting to thereby dip into the oil in said sump and throw the same upwardly into the crankcase interior, said bracket so positioning the oil slinger that oil thrown upwardly therefrom strikes the top wall of the main casting adjacent to the crankshaft and cam shaft bearings therein.

11. The engine defined in claim 10 further characterized by the provision of an oil receiving pocket in the top wall of the main casting in position to receive oil thrown upwardly by the oil slinger; and an oil passage leading from said pocket to the crankshaft bearing in said top wall of the main casting.

12. In a horizontal engine: a crankcase comprising complementary main and cover castings joined on a horizontal plane parallel to the axis of the cylinder but below the cylinder so that the opposite walls of said castings provide the top and bottom respectively of the crankcase; mounting means on the cover casting for mounting the engine with its cylinder horizontal and the cover casting lowermost, said cover casting having a depression therein providing an oil sump beneath th plane of parting between the two castings, the top wal of the main casting and the bottom wall of the cover casting having bearings therein for the crankshaft and the cam shaft; a rotary oil slinger for lifting oil out of the sump and throwing it upwardly against the top wall of the main casting; a mounting bracket for the rotary oil slinger having a stub shaft upon which the oil slinger is journaled; and means fastening said mounting bracket to the main casting with the oil slinger positioned to dip into the sump provided by the cover casting and throw oil lifted therefrom against the top wall of the main casting; and means for driving the rotary oil slinger.

13. In an internal combustion engine of the character described: a crankcase defined partially by a hollow casting having an open bottom and a closed top wall and having the cylinder of the engine formed integrally therewith with its axis parallel to the plane of the open bottom and the closed top wall; an oil sump removably secured to and closing the open bottom of said casting; parallel crankshaft and cam shaft bearings in the top wall of the casting and in the oil sump; a crankshaft having a timing gear thereon and a cam shaft having a timing gear thereon journaled in said bearings with their timing gears meshing and with at least one of the timing gears adjacent to the plane of parting between the casting and the oil sump; a rotary oil slinger having paddles on its periphery and having gear teeth adapted to mesh with the teeth of said timing gear; a mounting bracket for the rotary oil slinger having a stub shaft upon which the oil slinger is journaled; and means mounting said bracket upon the crankcase casting including interengaging locating means on the bracket and the casting whereby said bracket is secured in a position disposing the oil slinger with its gear teeth in mesh with the said timing gear and its paddles dipping down into the oil sump to throw oil upwardly against the top wall of the casting.

14. In an engine of the character described: a cylinder and a crankcase formed as one casting, the crankcase being open at its bottom; a cover closing the open bottom of the crankcase, said cover having a depression therein providing an oil sump for the engine; bearings for the crankshaft of the engine carried by the cover and the wall of the crankcase opposite the cover; said cover having an oil filler port provided by a well extending down from the top of the cover alongside the depression in the cover, the top of said well providing the mouth of the port and lying substantially on a plane with the top edge of the depression; and the cover having an oil drain port in its bottom provided by a bore parallel to the oil filler port but lying between said port and the adjacent wall of the depression and breaking through both the wall of the depression and the oil filler port to thereby communicate the oil filler port with the interior of the depression; and removable caps for closing both the oil filler port and said oil drain port.

15. In an engine of the character described, the structure set forth in claim 14 further characterized by the provision of a boss projecting from the bottom of the depression in the cover, said boss being bored through and providing the bearing for the lower end of the crank shaft and having a height to reach substantially to the level of the mouth of the filler port so that oil in the sump cannot drain out through the lower crank shaft bearing when the engine is idle.

16. A single cylinder four-stroke cycle internal combustion engine having a crankshaft, a cylinder and a crank case through opposite walls of which the ends of the crankshaft pass, one end of the crankshaft having a flywheel thereon and the other end being the power take-off end of the crankshaft, characterized by the fact that: the engine is designed to be used with its cylinder horizontal with the walls of the crankcase through which the crankshaft passes being the top and bottom walls of the crankcase and with the flywheel adjacent to the top wall and the power take-off end of the crankshaft projecting down from the bottom wall; by the fact that the cylinder and all portions of the crankcase including the wall thereof remote from and facing the cylinder, except the bottom wall through which the power take-off end of the crankshaft passes is one integral casting; by the fact that said bottom wall is provided by a cover removably secured to said casting; by the fact that the crank shaft and the cam shaft are supported by said cover and the top wall of the crankcase; by the fact that said cover has a rela-

P-534

tively deep upwardly opening depression which provides an oil sump; and characterized further by the fact that the cover has a boss projecting upwardly from its inner face and bored through to provide a bearing in which the lower end of the crankshaft is rotatably supported, said boss extending for substantially the full depth of the depression in the cover so that oil in the depression rising to a level equal to the full depth of the depression will not drain out along the crankshaft when the engine is idle.

References Cited in the file of this patent

UNITED STATES PATENTS

Number	Name	Date
1,447,245	Gore	Mar. 6, 1923
1,463,958	Kettering	Aug. 7, 1923
2,157,666	Jacobi	May 9, 1939
2,249,319	Lohner	July 15, 1941
2,256,002	Molnar	Sept. 16, 1941
2,305,186	Muenk	Dec. 15, 1942
2,375,718	Winkels et al.	May 8, 1945
2,404,833	Forster	July 30, 1946
2,424,416	Piry	July 22, 1947
2,511,823	Klotsch	June 13, 1950
2,559,079	Leja	July 3, 1951
2,569,461	Dingman	Oct. 2, 1951
2,583,466	Brownlee	Jan. 22, 1952
2,590,134	Slonneger	Mar. 25, 1952
2,606,541	Lutz	Aug. 12, 1952
2,630,881	Bosma	Mar. 10, 1953
2,669,322	Brown	Feb. 16, 1954

FOREIGN PATENTS

Number	Country	Date
32,802	Netherlands	May 15, 1934

Nov. 9, 1954 L. J. LECHTENBERG 2,693,791

BREATHER FOR AIR-COOLED INTERNAL-COMBUSTION ENGINES

Original Filed May 11, 1954 4 Sheets-Sheet 1

Fig. 1.

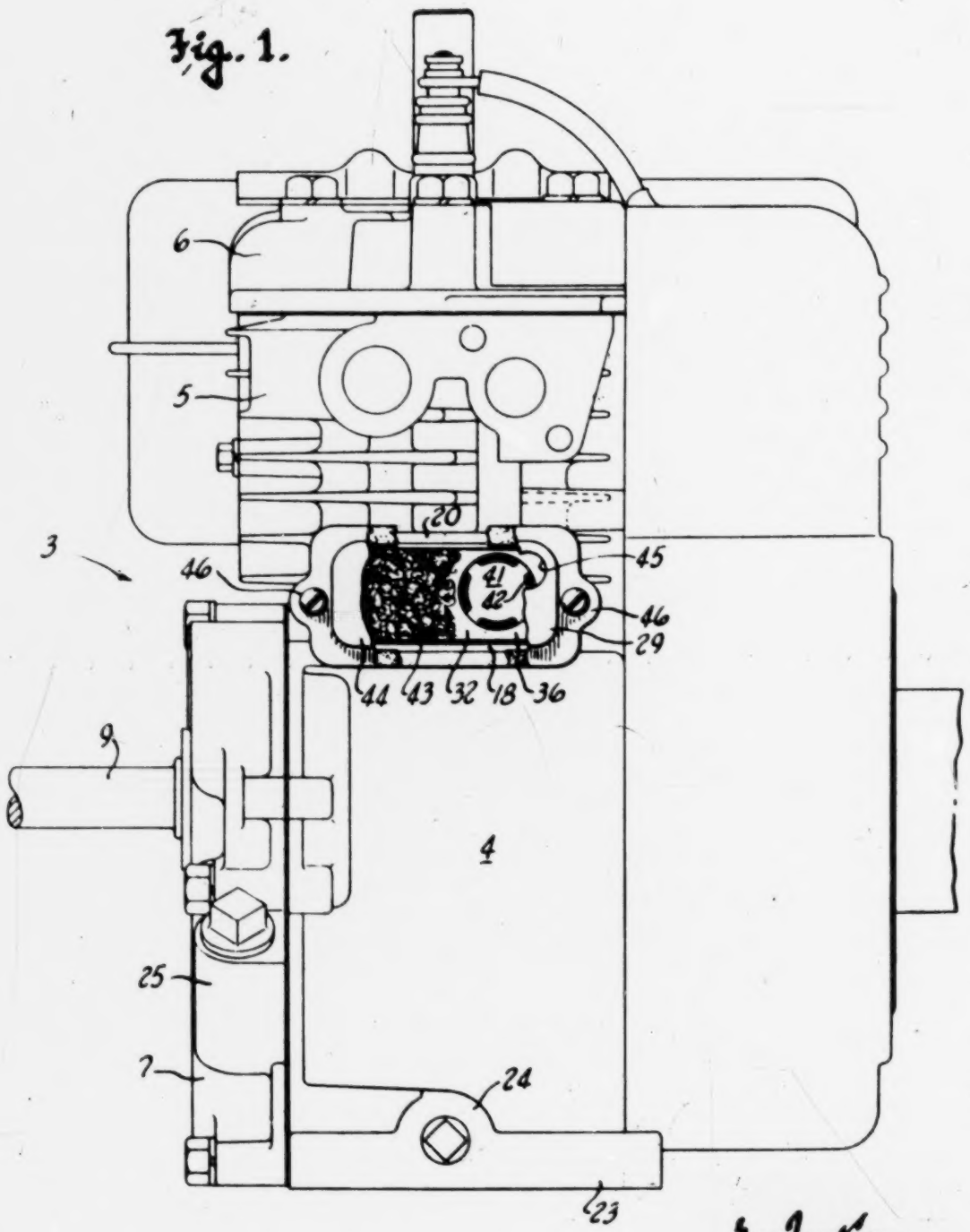

Inventor
Leo J. Lechtenberg
By Drahtler, Jones
Attorney

Nov. 9, 1954 L. J. LECHTENBERG 2,693,791

BREATHER FOR AIR-COOLED INTERNAL-COMBUSTION ENGINES

Original Filed May 11, 1954 4 Sheets-Sheet 2

Fig. 2.

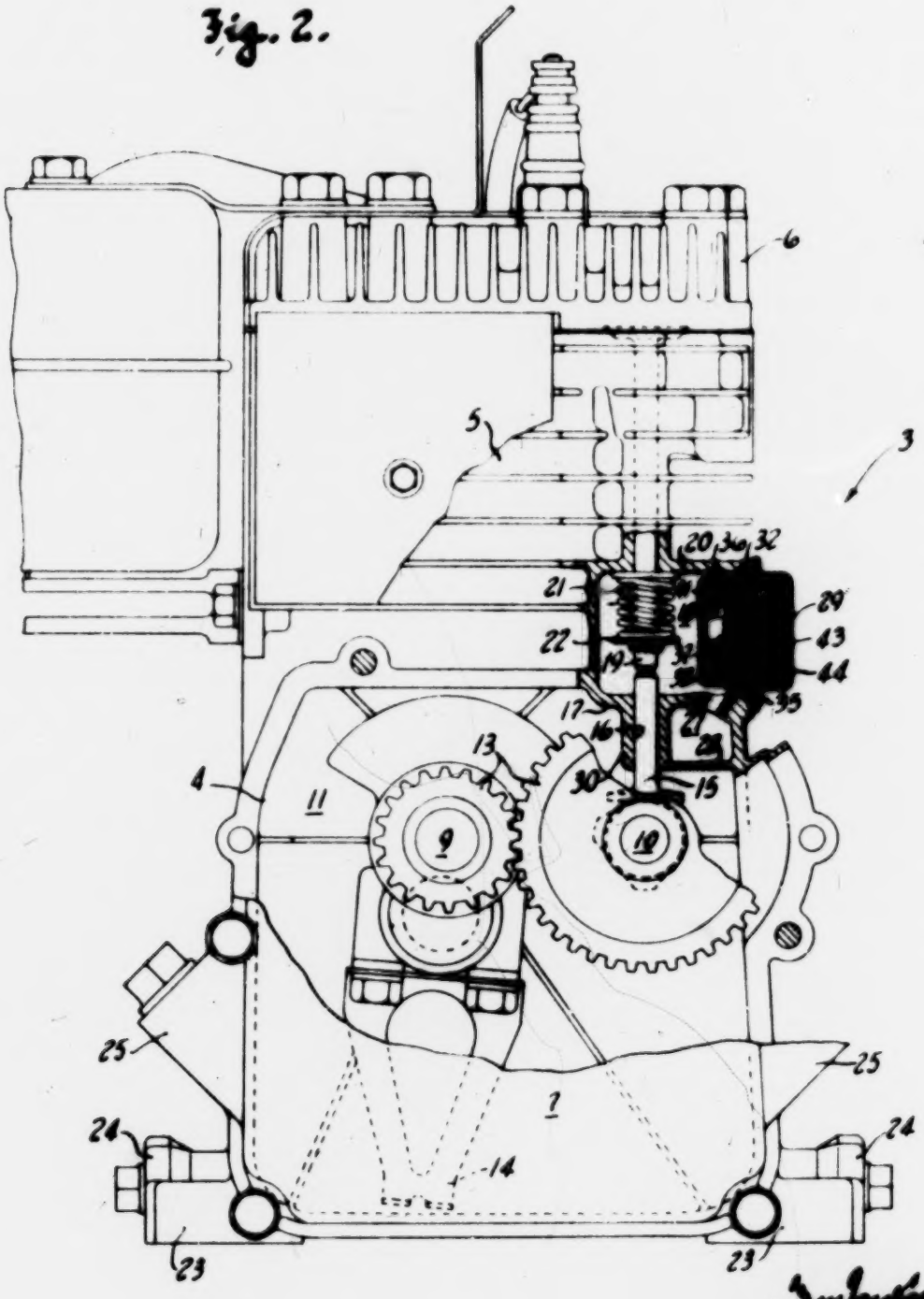

Leo J. Lechtenberg

Attorney

Nov. 9, 1954 L. J. LECHTENBERG 2,693,791

BREATHER FOR AIR-COOLED INTERNAL-COMBUSTION ENGINES

Original Filed May 11, 1954 4 Sheets-Sheet 3

Fig. 3.

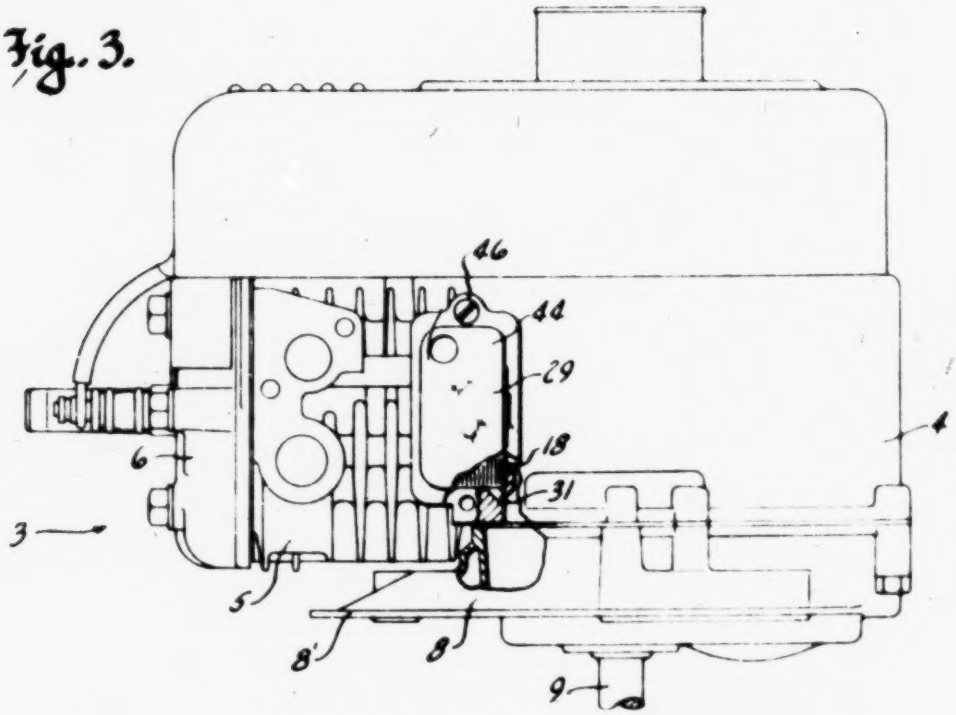

Fig. 4.

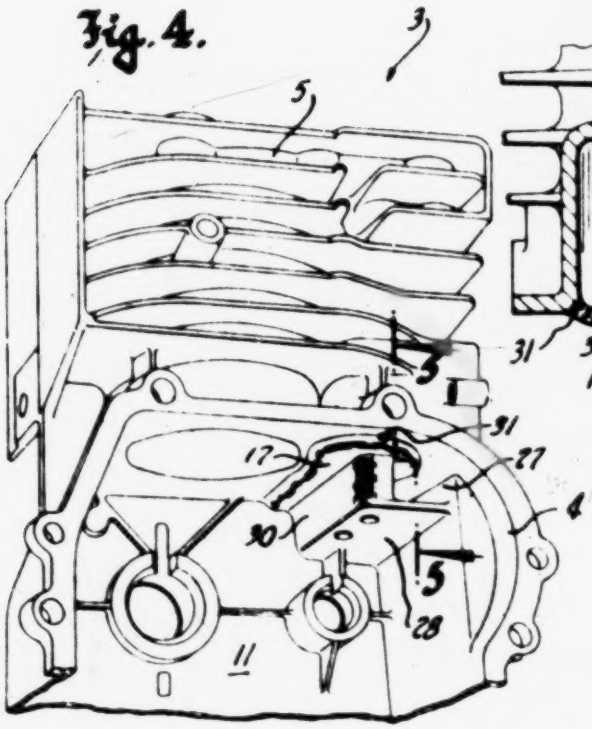

Fig. 5.

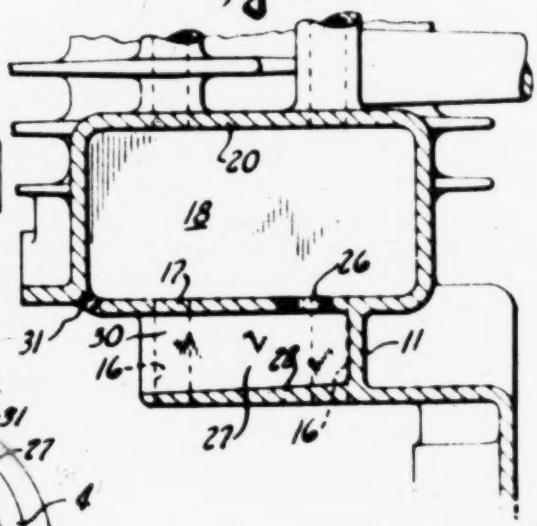

Inventor
Leo J. Lechtenberg
By Ira Milton Jones
Attorney

Nov. 9, 1954 L. J. LECHTENBERG 2,693,791

BREATHER FOR AIR-COOLED INTERNAL COMBUSTION ENGINES

Original Filed May 11, 1954 4 Sheets-Sheet 4

Fig. 6.

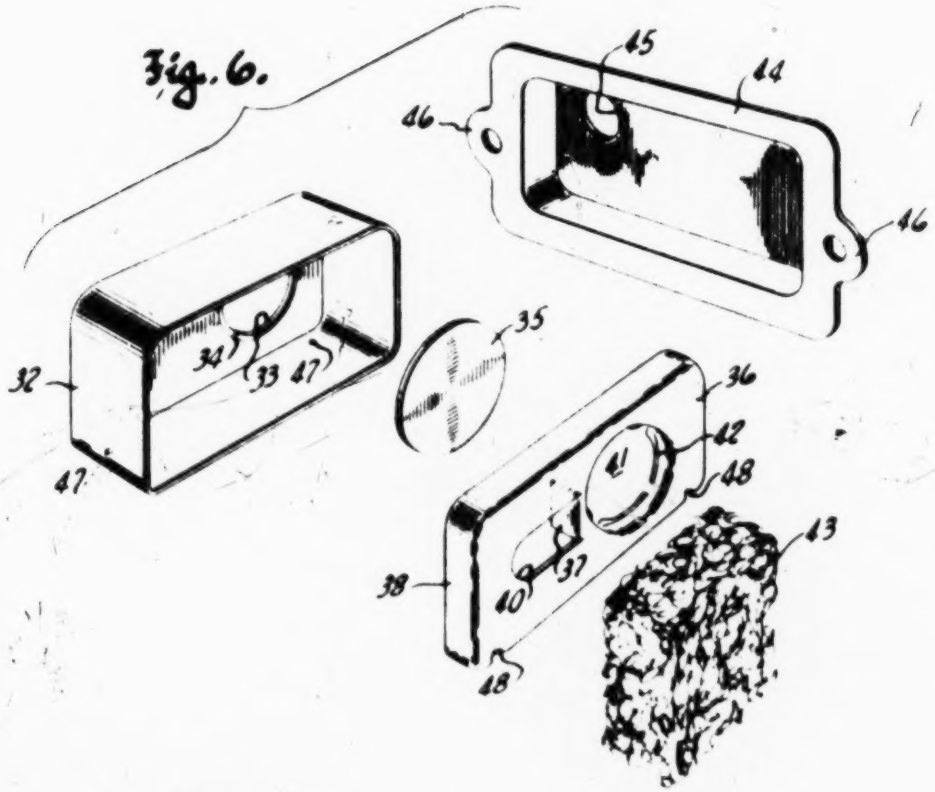

Fig. 7.

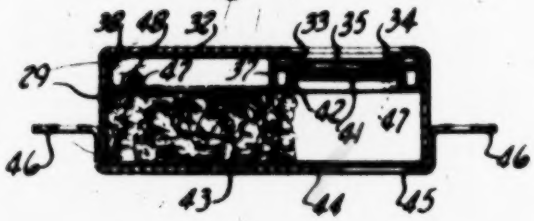

Inventor
Leo J. Lechtenberg
By [signature]
Attorney

United States Patent Office

2,693,791

Patented Nov. 9, 1954

2,693,791

BREATHER FOR AIR-COOLED INTERNAL-COMBUSTION ENGINES

Leo J. Lechtenberg, Milwaukee, Wis., assignor to Briggs & Stratton Corporation, Milwaukee, Wis., a corporation of Delaware

Application August 9, 1954, Serial No. 448,406

5 Claims. (Cl. 121—194)

This invention relates to internal combustion engines and refers more particularly to single cylinder, air cooled, four-stroke cycle engines of the type now widely used on power lawn mowers and many other well-known appliances.

More specifically, this invention concerns the manner in which the crankcase of the engine forming the subject matter of the pending application Serial No. 354,056, is vented; this application being a division of said application.

One of the objects of this invention is to provide assurance against oil leakage from the crankcase through the necessary breather opening by the simple expedient of a properly placed baffle cast integral with the crankcase.

With a view toward improving the air breather for the crankcase it is another object of this invention to vent the crankcase through a pocket or compartment in which the valve springs are located and with which the tappet openings communicate, and to control the flow of air to and from this valve spring pocket or compartment by means of a novel breather valve assembly formed as a cover for the valve spring compartment.

With the above and other objects in view, which will appear as the description proceeds, this invention resides in the novel construction, combination and arrangement of parts substantially as hereinafter described and more particularly defined by the appended claims, it being understood that such changes in the precise embodiment of the herein disclosed invention may be made as come within the scope of the claims.

The accompanying drawings illustrate one complete example of the physical embodiment of the invention constructed according to the best mode so far devised for the practical application of the principles thereof, and in which:

Figure 1 is a side view of the engine of this invention with a part of the cover for the valve spring compartment broken away, and with the carburetor removed for clarity;

Figure 2 is a view of the power take-off end of the engine, with a substantial part of the crankcase cover broken away and parts of the cylinder-crankcase casting broken away and shown in section;

Figure 3 is a side view of the engine adapted for horizontal operation, that is, with its cylinder horizontal and showing the same equipped with a crankcase cover especially designed to adapt the engine for use as the power unit of a rotary type lawn mower, parts of said view being broken away and shown in section to illustrate how oil which may enter the valve spring compartment is drained therefrom when the engine is adapted for horizontal operation;

Figure 4 is a perspective view of a portion of the cylinder-crankcase casting looking into the interior of the crankcase and illustrating especially the baffle arrangement by which the splashing of oil through the breather opening is prevented;

Figure 5 is a detail sectional view through Figure 4 on the plane of the line 5—5;

Figure 6 is an exploded perspective view of the air breather assembly which controls the venting of the crankcase interior, and

Figure 7 is a longitudinal sectional view through the air breather assembly.

Referring now particularly to the accompanying drawings in which like numerals indicate like parts throughout the several views, the numeral 3 designates generally the crankcase-cylinder casting of the engine, consisting of a crankcase portion 4 and a cylinder 5. This main casting together with a cylinder head 6 and a crankcase cover casting 7 or 8 (depending upon the intended use of the engine) comprises the entire body of the engine. For ordinary general utility where an upright disposition of the engine is desirable, the crankcase cover 7 is used, but where the engine is intended to operate with its cylinder axis horizontal as in the driving units of rotary type lawnmowers, and as shown for instance in Figure 3, the cover 8 is used.

The bearings for the engine crankshaft 9 and its cam shaft 10 are mounted in the cover casting and the end wall 11 of the crankcase-cylinder casting opposite the cover, and to enable adapting the engine to any one of a wide variety of uses without need for changing the crankcase-cylinder casting the flywheel 12 is mounted upon the end of the crankshaft which protrudes from the casting wall 11 and the opposite power take-off end of the crankshaft protrudes from the cover casting regardless of which of the two types of covers is employed.

The crankcase-cylinder casting 3, the cylinder head 6 and the crankcase cover 7–8 are cast of aluminum alloy, preferably as die castings, and the crankshaft and cam shaft run directly in bearings bored in the cover casting and the opposite wall of the crankcase-cylinder casting. In other words, the bearings are not bushed, but can be bored out to receive bushings (not shown) after the engine has been in service long enough to cause serious bearing wear.

The cam shaft 10, which is of conventional construction is driven from the crankshaft by the usual set of timing gears 13 which are located adjacent to the crankcase cover, and when the engine is intended for general utility, the connecting rod has an oil splashing dipper 14 secured thereto to effectively splash the oil contained in the crankcase up into all parts of the crankcase interior and into the cylinder.

Valve tappets 15 operated by the cam shaft are slidably received in relatively long holes 16 drilled through a wall 17 of the crankcase-cylinder casting and a boss 30 depending therefrom. The outer ends of these holes open to a valve spring pocket or compartment 18 in which the tappets abut the valve stems 19 to lift the valves in the customary manner. The valve stems enter the compartment 18 through its top wall 20 and the valve springs 21 are confined between this top wall 20 and spring seats 22 on the lower ends of the valve stems.

The valve spring pocket or compartment 18 not only affords a convenient enclosure for the valve springs but, as will be hereinafter more fully described, forms part of the means by which the crankcase interior is ventilated.

If the engine is intended for operation with its cylinder vertical the crankcase-cylinder casting 3 is provided with integral mounting feet 23 and bosses 24 at opposite sides of the casting, either one of which may be drilled and tapped to provide an oil drain port. But when the engine is intended for operation with its cylinder axis horizontal, the feet and drain port are not needed and hence those portions of the die or mold in which the feet and bosses are formed would be blocked off. Also, when the engine is intended for general utility and the cover 7 is employed the oil filler port may be located at either side of the engine, and to provide for such alternate location the cover casting 7 has a pair of bosses 25 either of which may be drilled and tapped to provide the oil inlet port.

If the engine is intended for operation with its cylinder horizontal and the other cover casting 8 is used both the oil inlet port and the oil drain port are in the cover casting which has a relatively deep dish-shaped formation and thus provides an oil sump for the engine. The gasket face formed by the outer edges of the side walls of the cover 8 has the same shape as the gasket face formed by the outer edges of the side walls of the cover casting 7 so as to interchangeably fit the open side of the crankcase.

If the engine is intended for use as the power unit

of a rotary type lawn mower the cover casting 8 has a mounting flange 8' cast integrally therewith. This flange seats upon and is secured to the deck of the lawn mower (not shown) to firmly mount the engine with the power take-off end of its crankshaft extending down below the deck.

Crankcase ventilation, as hereinbefore suggested, is accomplished with a minimum loss of oil from the crank case. The need for ventilating the crankcase arises from the fact that as the piston descends it tends to compress the air in the crankcase, and as it rises on its compression stroke there is a certain amount of "blow-by" past the piston rings from the combustion chamber. Thus unless the crankcase is vented the pressure therein builds up and causes undue leakage of oil past the oil seals and gasket joints. The means provided by this invention for ventilating the crankcase not only eliminates such undesirable pressure but in fact actually produces a partial vacuum in the crankcase. To achieve this result without loss of oil from the crankcase the air is led from the crankcase by a very tortuous passage which includes the valve spring compartment 10 and comprises a hole or port 26 in the bottom wall 17 of this compartment, a pocket 27 formed by a baffle 28 in coaction with adjacent walls of the crankcase and a novel air breather assembly 29 which forms a cover for the valve spring compartment.

As best shown in Figure 5 the port 26 is located between the plane of connecting rod motion and the end wall 11 of the crankcase. The baffle 28 is formed as an integral part of the crankcase-cylinder casting and projects from its end wall 11 across the mouth of the port, being preferably a continuation of the bottom of the depending boss 30 through which the valve tappets pass. Since the baffle 28 extends from the casting wall 11 almost to the open side of the casting it coacts with the adjacent walls of the casting to define the pocket 27 which forms a tortuous path of communication between the port 26 and a "quiet" relatively oil-free zone of the crankcase interior. Hence, very little oil is carried from the crankcase through the port 26. That which does leave the crankcase through this port is trapped in the valve spring compartment 10 by the breather assembly 29, to be returned to the crankcase when the engine is in its vertical position by simply flowing back through the port 26 into the pocket 27 and from there over the edge of the baffle 28, and when the engine is in its horizontal position, by flowing through a drain port 31 which leads from the compartment 10 to the crankcase interior.

The breather assembly 29 as best shown in the exploded perspective view Figure 6, comprises a stamped oblong box 32 having a hole 33 in its bottom wall, the edge of which projects slightly from the bottom wall to provide a valve seat 34. A lighter flutter valve 35 stamped from fiber or other suitable material coacts with the seat 34 and is loosely held in position by a partition wall 36 and a tongue 37 extending down from the partition wall toward the bottom of the box 32. The partition wall is spaced a fixed distance from the bottom wall of the box by downturned edges 38, and the tongue 39 being formed from the partition wall leaves a hole 40 through which air may freely pass from one side of the partition wall to the other.

A protrusion 41 in the partition wall 36 provided with circumferentially spaced projections 42 holds the flutter valve 35 off the partition wall and the projections keep the valve disc from sticking in its open position. The valve disc is thus always free to float to and from engagement with the valve seat 34 as the pressure in the crankcase alternates between negative and positive. This arrangement permits free expulsion of air from the crankcase and restricts influx of air to the slight amount which can pass through the hole 33 during the interval the valve disc moves from its "open" position to its "closed" position on the seat 34. However, any dirt or foreign matter entrained in the air thus entering the crankcase is trapped by a mass of keratin fiber or other filtering material 43 confined between the partition and a cover 44.

The cover 44 fits over the box 32 and has an air inlet port 45 in its end remote from the hole 40 in the partition wall to thus assure that any air flowing through the device either inward or outward must pass through the filter.

Mounting ears 46 on opposite ends of the cover provide for fastening the entire assembly in position across the mouth of the valve spring pocket or compartment with the box 32 projecting a substantial distance into the compartment as best shown in Figure 2. Any oil which is carried into the box 32 drains back into the valve spring compartment through drain holes 47 and 48 in the box and its partition wall, and these holes are so located that at least one set thereof is always effective regardless of whether the engine is operating with its cylinder vertical, inclined from the vertical, or horizontal.

The air breather assembly of this invention thus performs five important functions.

(1) It baffles out the oil remaining in the air expelled from the crankcase.

(2) It drains this oil back to the crankcase.

(3) Its flutter valve enables the maintenance of a partial vacuum in the crankcase.

(4) Its filter traps dirt which might otherwise be carried into the crankcase.

(5) It provides a cover for the valve spring compartment.

What is claimed as my invention is:

1. In an internal combustion engine of the character described having a cylinder and a crankcase cast as one unit with the cylinder extending from one wall of the crankcase, said wall of the crankcase having an air breather hole therein near the junction of said wall with an adjacent side wall of the crankcase for communicating the interior of the crankcase with the atmosphere; and a baffle inside the crankcase cast integrally therewith and extending across the corner at the junction of said two walls and across the mouth of said air breather hole to coact with said two walls to define a tortuous passage leading from the mouth of said air breather hole to a relatively oil free zone of the crankcase interior to thereby minimize loss of lubricant from the crankcase through said air breather hole.

2. In an internal combustion engine of the character described having a cylinder and a crankcase cast as one unit with the cylinder extending from one wall of the crankcase and with the crankcase having an end wall substantially parallel with the plane of the connecting rod motion, the first designated wall of the crankcase from which the cylinder extends having an air breather hole therein near the junction of said first designated wall with an adjacent side wall of the crankcase and between the plane of connecting rod motion and said end wall of the crankcase for communicating the interior of the crankcase with the atmosphere; and a baffle inside the crankcase cast integrally therewith and extending across the corner at the junction of said first designated wall and said side wall and across the mouth of said air breather hole and projecting from the end wall of the crankcase a substantial distance beyond the plane of connecting rod motion to coact with said two corner defining walls to form a tortuous passage leading from the mouth of said air breather hole to a relatively oil free zone of the crankcase interior to thereby minimize loss of lubricant from the crankcase through said air breather hole.

3. An air breather unit for internal combustion engines, comprising: a stamped sheet metal plate adapted to be secured as a cover over an opening in a wall of the engine; a box-like stamping having a hole in its bottom, the edge of said hole being raised a slight distance above the inner surface of said bottom wall to provide a valve seat; means connecting the box-like stamping with said cover plate, said cover plate having a hole therethrough; a light valve disc within the box-like stamping; means loosely confining said disc to a zone over the valve seat so that said disc may be moved off and onto the seat; a partition wall inside the box-like enclosure between its bottom wall and the cover plate and positioned to block direct passage through said holes and provide a tortuous passage from one hole to the other; and a filter between the partition wall and the cover plate through which all air flowing through the unit must pass.

4. In an internal combustion engine of the character described, having a cylinder and crankcase cast as one integral unit with the cylinder extending outwardly from one wall of the crankcase; a boss extending inwardly from said wall of the crankcase between its junction with the cylinder and the junction of said wall and an adjacent side wall of the crankcase; said boss having holes therethrough to accommodate the valve actuating tappets of

the engine; the portion of said first designated crankcase wall which lies between the cylinder and said boss having an air breather hole therethrough for communicating the interior of the crankcase with the atmosphere; and a baffle inside the crankcase cast integrally therewith and extending from said boss towards the designated side wall of the crankcase across the corner formed by its junction with the first designated crankcase wall and across the mouth of the air breather hole to coact with said two walls and the boss to define a tortuous passage leading from the mouth of the air breather hole to a relatively oil free zone of the crankcase interior to thereby minimize loss of lubricant from the crankcase through said air breather hole.

5. The engine defined in claim 4 further characterized by the fact that the crankcase has an end wall substantially parallel with the engine's connecting rod motion and joining said two designated walls of the crankcase;

by the fact that the boss and the baffle also join said end wall and project substantially perpendicularly therefrom for a substantial distance beyond the plane of connecting rod motion; and by the fact that the air breather hole is located between the plane of connecting rod motion and said end wall of the crankcase.

References Cited in the file of this patent

UNITED STATES PATENTS

Number	Name	Date
1,352,022	Pajalic	Sept. 7, 1920
2,029,216	Barker	Jan. 28, 1936
2,187,265	Carlson	Jan. 16, 1940
2,305,186	Musak	Dec. 15, 1942
2,361,061	Roos	Oct. 24, 1944
2,607,332	Boema	Aug. 19, 1952

UNITED STATES PATENT OFFICE

CERTIFICATE OF CORRECTION

Patent No. 2,693,791 November 9, 1954

Leo J. Lechtenberg

It is hereby certified that error appears in the printed specification of the above numbered patent requiring correction and that the said Letters Patent should read as corrected below.

Column 5, line 2, strike out "the cylinder" and insert instead --said adjacent side wall of the crank case--.

Signed and sealed this 8th day of March, 1955.

(SEAL)
Attest:

E. J. MURRY

Attesting Officer

ROBERT C. WATSON
Commissioner of Patents

Certificate of Correction

Patent No. 2,693,791 November 9, 1954

Leo J. Lechtenberg

It is hereby certified that error appears in the above numbered patent requiring correction as follows:

In the headings to the drawings, Sheets 1, 2, 3, and 4, line 3, in each instance, for "Original Filed May 11, 1954" read *Original Filed May 11, 1953*;

and that the said Letters Patent should be read as corrected above.

Signed and sealed this 11th day of January, A. D. 1955.

ARTHUR W. CROCKER,
Assistant Commissioner of Patents.

[SEAL]

310,082 AMENDED SPECIFICATION 1 SHEET

This Drawing is a reproduction of the Original on a reduced scale.

Fig.1.

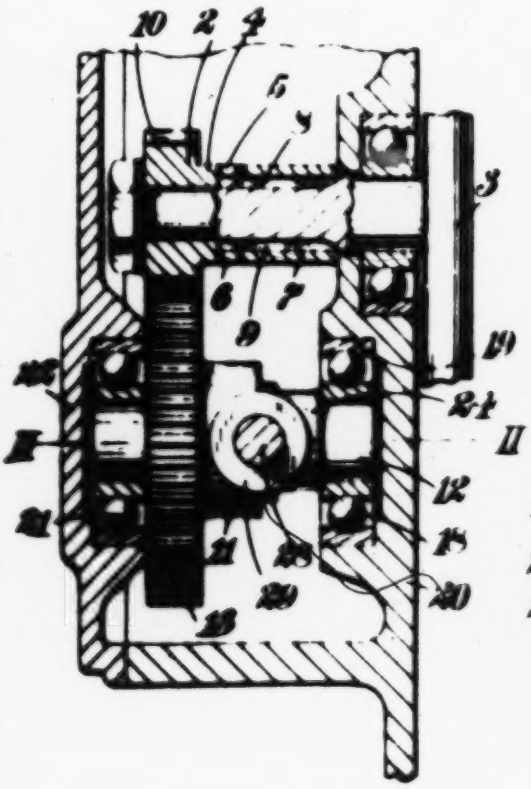

Fig.2.

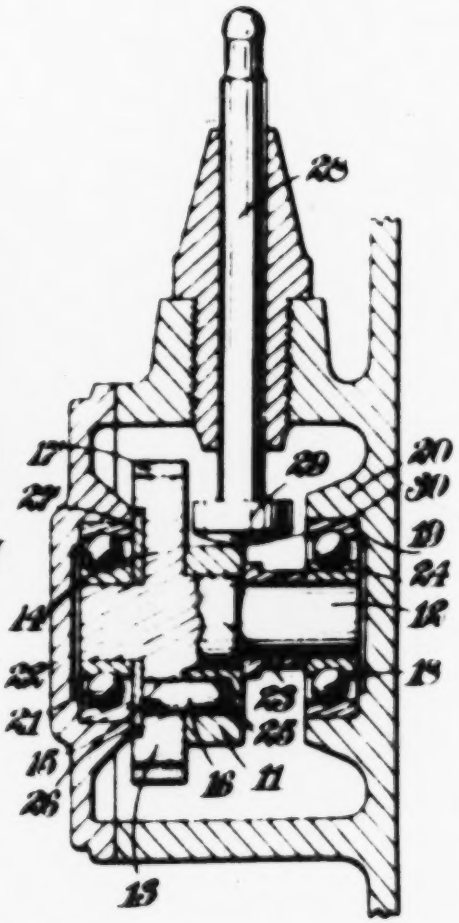

Fig.3.

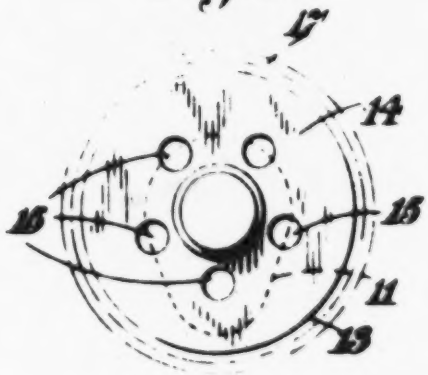

Charles & Read Ltd Photo Litho

AMENDED SPECIFICATION.

as amended under Section 8 of the Patents and Designs Acts, 1907 to 1928.

PATENT SPECIFICATION

310,082

Application Date: Jan. 20, 1928. No. 1910/28.

Complete Left: Oct. 20, 1928.

Complete Accepted: April 22, 1929.

PROVISIONAL SPECIFICATION.

Improvements in Timing Mechanism for Cams or other Rotating Members.

We, CYRIL GEORGE PULLIN, a British Subject, of 11, Small Street, Bristol, and HARRY LAURENCE GROOM, a British Subject, of "The Homestead", Thrale Road, Streatham, London, S.W.16, do hereby declare the nature of this invention to be as follows:—

This invention relates to timing mechanism for cams or other rotating members, and its principal object is to provide in a simple, inexpensive and effective manner for fine angular adjustments of the cams of internal combustion engines, although the invention may equally well be applied to other kinds of engines or machines.

According to this invention, in the gear train driving the cam an angular adjustment device is provided between each of two or more gears and the member on which they are mounted.

This cheapens manufacture as it enables a very fine adjustment to be obtained from two relatively coarse ones which can be produced by comparatively simple means without involving highly skilled labour. Obviously, however, where finer adjustments still are desirable, one or both can initially be manufactured as a relatively fine adjustment, so that the results obtainable are of a far more delicate nature.

In one method of carrying out the invention for an internal combustion engine, the driving pinion for operating the cam mechanism is formed separately from the crankshaft and is provided with one or more keyways for selective engagement with a key on the crankshaft, and is spaced as to provide thereby for an angular adjustment of the pinion on the crankshaft by some fraction of the angular pitch of the pinion teeth.

Where the engine is of the single cylinder type and each valve cam is on a separate spindle, the timing gear or cam pinion engaging the crankshaft pinion is formed integrally with the spindle, and the cam is loosely mounted upon the spindle to abut the timing gear. In the web of the latter is provided a convenient number of holes, for example five, and these are selectively engageable by a pin projecting from the side of the cam. The spacing of the holes in the timing gear is such that by this selective engagement an angular movement of the cam in respect to the indexing of the teeth is varied by a fraction of the angular pitch of the tooth dependent upon the number of holes provided. By this arrangement therefore, an exceedingly fine adjustment of the cam in relation to the crankshaft can be made notwithstanding that each separate adjustment (i.e. driving pinion on the crankshaft and the cam in relation to the camshaft timing gear) may be relatively coarse. Manufacture is thus cheapened very considerably, for it is possible to make the pinion and shaft from a relatively soft and cheap material, whilst the separately formed cam can be case-hardened and ground. Furthermore, numerous cam forms can be stocked and they can be interchanged on the engine with very little delay or expense.

It is to be understood, however, that if desired the cam pinion, the spindle and the cam can be made in three separate parts, the pinion being secured to the shaft as by keying or any other preferred method.

A preferred arrangement where the cam pinion and spindle are in one is to provide ball bearings for each end of the spindle, mounting one of these bearings in a recess in the wall of the crankcase

[Price 1/-]

Bryant & Lowry 42496

and the other in a cover which closes the casing around the timing gears. The cam pinion is adjacent the outer ball bearing, and on the inner side of it is a slightly enlarged seating for the cam, which is separately formed and engages thereon by a light press fit. It is retained in position by a tubular distance piece, one end of which bears against the side of the cam and the other against the inner race of the inner ball bearing.

In the side of the cam is a blind hole, and in this is mounted a pin adapted selectively to engage one of the holes above referred to provided around the disc of the cam pinion. In the face of this latter remote from the cam, is sunk an annular recess, and in this recess fits a washer which bears against the end of the pin connecting the cam and cam pinion, preventing the pin moving out of position. This washer lies against the adjacent face of the outer ball bearing and therefore is secure when the timing gear cover is in place.

The cam tappet preferably has a circular head which bears on the cam and is of a diameter approximately double the width of the cam. The axis of the tappet is offset (i.e. to one side of the centre of the width of the cam) so that rotation of the tappet is thereby ensured by the action of the cam, and wear of the head is equalized.

It will be seen, therefore, that the invention provides a very simple and inexpensive method of timing-cam mechanism, and of so forming the cam that it is readily interchangeable. It is preferred that where the inlet and the exhaust valve cams are carried by separate spindles the adjustment device should be provided for each cam.

Dated this 19th day of January, 1928.

ERIC W. WALFORD,
Fellow of the Chartered Institute of Patent Agents,
19, Hertford Street, Coventry,
Agent for the Applicants.

COMPLETE SPECIFICATION (AMENDED).

Improvements in Timing Mechanism for Cams or other Rotating Members.

We, CYRIL GEORGE PULLIN, a British Subject, of the Ascot Motor & Manufacturing Company Limited, Letchworth, Hertfordshire, formerly of 11, Small Street, Bristol, and STANLEY LAURENCE GROOM, a British Subject, of "The Homestead", Thrale Road, Streatham, London, S.W.16, do hereby declare the nature of this invention and in what manner the same is to be performed, to be particularly described and ascertained in and by the following statement:—

This invention relates to timing mechanism for cams or other rotating members, of the kind which comprises two or more toothed engagements of different pitches between elements of the gearing of internal combustion engines by means of which a very fine angular adjustment of a cam or other rotating member driven thereby can be obtained. The object of the invention is to provide a mechanism of this kind particularly applicable to the valve operating gear of a motor cycle engine.

According to this invention, in the gear train driving a cam or other rotating member an angular adjustment device is provided between each of two or more gears and the members on which they are mounted or to which they are operatively connected.

This cheapens manufacture as it enables a very fine adjustment to be obtained from two or more relatively coarse ones which can be produced by comparatively simple means without involving highly skilled labour. Obviously, however, where finer adjustments still are desirable, one or both can initially be manufactured as a relatively fine adjustment, so that the results obtainable are of a far more delicate nature.

In the accompanying drawings illustrating the application of the invention to the cam timing mechanism of an internal combustion engine.

Figure 1 is a fragmentary sectional plan of the timing gear casing and its enclosed parts, showing also the adjustment device between the driving pinion and its shaft.

Figure 2 is a section on the line II – II of Figure 1 showing the adjustment device between a cam and the pinion coupled to it, and

Figure 3 is an end view of the cam pinion, with the cam indicated by dotted lines.

In this construction the driving pinion 2 for operating the cam mechanism is formed separately from the crankshaft 3 and is provided on the end of its [illegible]

portion 4 with five spaced dogs 5 for selective engagement with co-acting dog parts 6 on the adjacent end face of a sleeve 7. This sleeve has formed on its inner periphery longitudinal splines 8 (for example, six in number) adapted to be engaged selectively with a similar number of co-acting splined parts 9 on the crankshaft 3.

The dogs 5 on the pinion 2 are so spaced in relation to the teeth 10 thereon as to provide thereby for an angular adjustment of the pinion about the crankshaft by some fraction of the angular pitch of the pinion teeth. Such desired spacing is obtained if the number of dogs 5 is not an integer multiple or sub-multiple of the number of teeth on the pinion. The same remark applies to the relationship of the number of splines 8 to the number of pinion teeth, whilst for the purpose of this invention the number of splines must also differ from the number of dogs, for example in a known manner by plus or minus one.

The dogs and splines taken separately give relatively coarse adjustment of the pinion and the sleeve respectively but used in conjunction a much finer adjustment is possible, the method adopted being to change the angular position of the pinion in relation to the sleeve only, or that of the sleeve and pinion (as one piece) in relation to the crankshaft only, or to make a change at both the dogs and the splines.

The timing gear or cam pinion 13 engaging the crankshaft pinion 2 is formed integrally with its spindle 12, and the cam 11 is loosely mounted upon the spindle to abut the timing gear. In the web 14 of the latter is provided a convenient number of holes 15 not forming an integer sub-multiple of the number of teeth in the pinion 13, for example five, and these are selectively engageable by a pin 16 projecting from the side of the cam. The spacing of the holes 15 in the timing gear is such that by this selective engagement an angular movement of the cam in respect to the indexing of the teeth 17 is varied by a fraction of the angular pitch of the teeth depending upon the number of holes provided.

By using these three adjustments, therefore, an exceedingly fine angular movement of the cam 11 in relation to the crankshaft 3 can be made [illegible] standing that each separate adjustment may be [illegible] is thus cheapened [illegible] it is possible to make [illegible] shaft 12 from [illegible]

Furthermore, numerous cam forms can be stocked and they can be interchanged on the engine with very little delay or expense.

It is to be understood, however, that if desired the cam pinion 13, the spindle 12 and the cam 11 can be made in three separate parts, the pinion being secured to the shaft as by keying or any other preferred method.

A preferred arrangement where the cam pinion and spindle are in one as shown is to provide ball bearings for each end of the spindle, mounting one of these bearings 18 in a recess 19 in the wall 20 of the crankcase and the other 21 in a cover 22 which closes the casing around the timing gear. The cam pinion is adjacent the outer ball bearing 21, and on the inner side of it is a slightly enlarged seating 23 for the cam 11, which is separately formed and engages thereon by a light press fit. It is retained in position by a tubular distance piece 24, one end of which bears against the side of the cam and the other against the inner race of the inner ball bearing.

In the side of the cam 11 is a blind hole 25, and in this is mounted the pin 16 adapted selectively to engage one of the holes 15 in the cam pinion. In the face of this latter remote from the cam is sunk an annular recess 26, into which fits a washer 27 adapted to bear against the end of the pin 16 and prevent it moving out of position. This washer lies against the adjacent face of the outer ball bearing 21 and therefore is secure when the timing gear cover 22 is in place.

The cam tappet 28 preferably has a circular head 29 with a curved surface 30 which bears on the cam 11 and the head is of a diameter approximately double the width of the cam. The axis of the tappet is offset as shown, i.e., to one side of the centre of the width of the cam. When wear commences the tappet will be rotated by the action of the cam and wear upon the head will thus be equalized.

It will be seen, therefore, that the invention provides a very simple and inexpensive method of timing cam mechanism and of so forming the cam that it is readily interchangeable. It is preferred that where inlet and exhaust valve cams are carried by separate spindles the adjustment [illegible] should be provided [illegible] each cam.

[illegible]

referred to for cams or other rotating members, wherein an angular adjustment device is provided between each of two or more gears of the driving train and the members on which they are mounted or to which they are operatively connected.

2. Timing mechanism as claimed in Claim 1, in which a sleeve having a splined connection with the driving member is interposed between the latter and a gear thereon, the driving connection between the gear and sleeve being established by dogs, whose number and that of the splines is other than a multiple or sub-multiple of the number of teeth in the pinion, for the purpose described.

3. Timing mechanism as claimed in Claim 1 or Claim 2 and for use in driving a cam in which the cam is loosely mounted upon the cam gear wheel and is operatively connected by a pin carried by the one part and selectively engageable with circumferentially spaced holes on the other part, the number of holes being other than a multiple or sub-multiple of the number of teeth in the cam gear wheel.

4. Timing mechanism as claimed in Claim 3, in which the cam is retained endwise in driving engagement with the cam gear wheel by means of a removable distance piece such as [illegible] is itself located by contact with a bearing [illegible] cam spindle.

5. The complete timing mechanism [illegible] cams or other rotating members [illegible] as described [illegible] illustrated in the accompanying drawings.

Dated [illegible] day of [illegible] 1908.

ERIC W. WALFORD,
Fellow of the Chartered Institute of Patent Agents,
19, Hertford Street, Coventry,
Agent for the Applicants.

Reference has been directed [illegible] Section [illegible] of the Patents and Designs Acts, 1907 [illegible] to Specification No. 287,882.

Redhill: Printed for His Majesty's Stationery Office [illegible]

FIG.1.

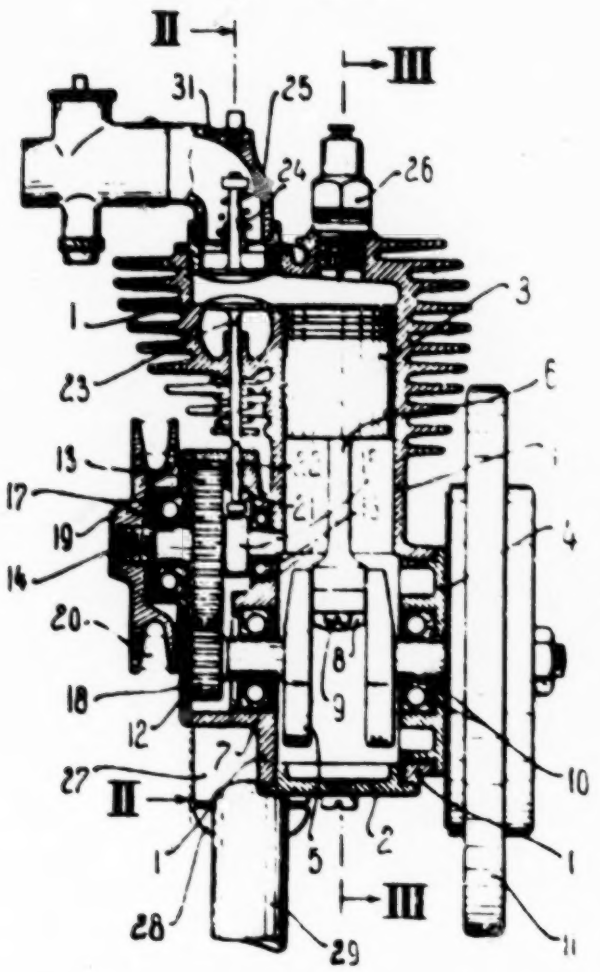

FIG.2.

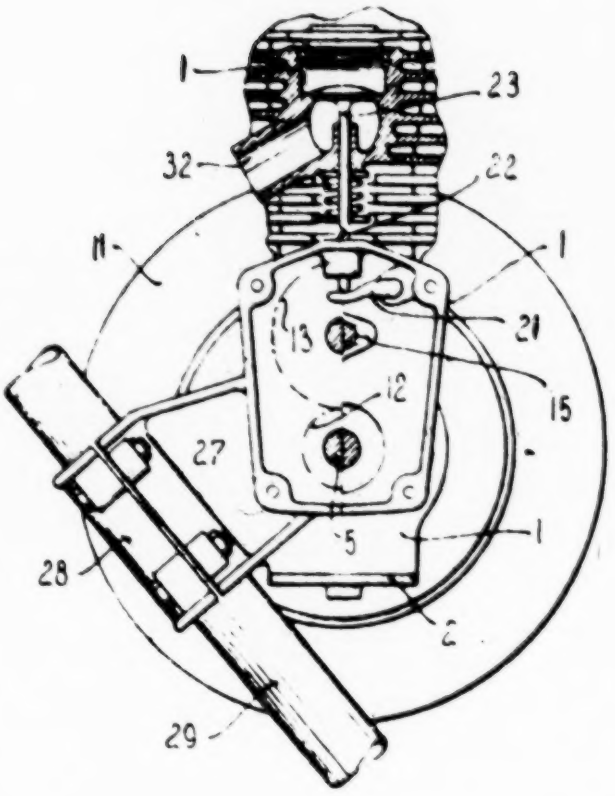

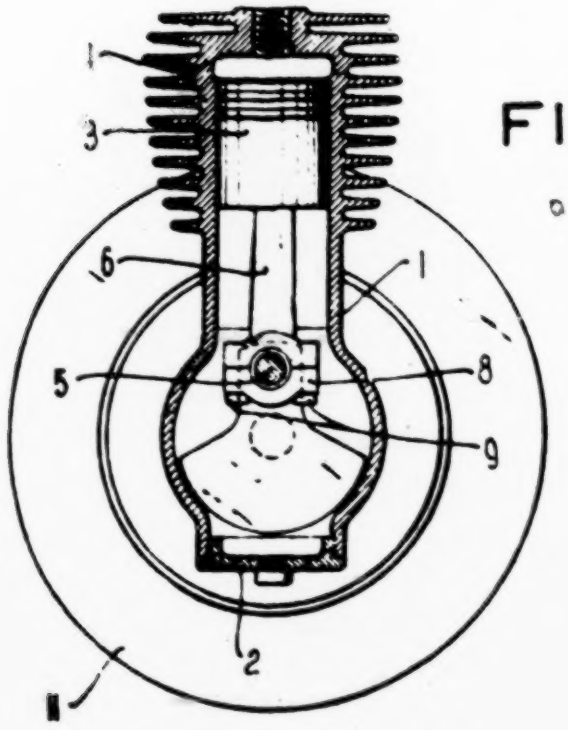

FIG.3.

Aanvrage 62173.

D. 621.434.12
621.43—22
621.431.73

Uitgegeven 15 Mei 1934.
Dagteekening 17 April 1934

Auteursrecht voorbehouden

OCTROOIRAAD

NEDERLAND

OCTROOI N°. 32802.

KLASSE 46 *a*. 6. (46 *c*. 4).

BILTHOVENSCHE METAALINDUSTRIE
te Bilthoven

Viertactverbrandingsmotor voor het drijven van een rijwiel of dergelijk doeleinde, waarbij de cylinder en de krukkast tot één hoofdgietstuk zijn vereenigd en de krukkast een door een deksel gesloten zijdelingsche opening bezit voor het naar binnen brengen van de krukas met een daarop aangebracht rondsel, dat in het tandwiel van de nokas grijpt.

Aanvrage 62173 Ned., ingediend 10 Augustus 1932, 14 uur 40 min.
openbaar gemaakt 15 December 1933

Het doel van de uitvinding is een kleine verbrandingsmotor, welke zoo eenvoudig is geconstrueerd, dat de aanmaakkosten laag en de montage bijzonder eenvoudig zijn. De grootst mogelijke betrouwbaarheid in het bedrijf wordt tevens nagestreefd. Een voorwaarde voor het bereiken van dit laatste doel is, dat de afwerking van de onderdeelen, niettegenstaande den lagen prijs toch zeer zuiver moet zijn.

Een viertactverbrandingsmotor van de in den titel omschreven soort is bekend uit het Britsche octrooischrift No. 153 685. Daarbij is de krukas éénzijdig uitgevoerd en de zijdelingsche opening in de krukkast door een dicht deksel met bouten gesloten. Het rondsel is op de krukas zelf uitgesneden en heeft dus dezelfde middellijn als deze.

Anderzijds is een tweetactverbrandingsmotor, ook met een éénzijdige krukas, doch met gescheiden cylinder en krukkast bekend uit het Fransche octrooischrift No. 321.400. Ook hierbij is in de krukkast een zijdelingsche opening gespaard, waardoor in schuine richting de éénzijdige krukas is gestoken en die vervolgens is gesloten door het krukasleger, dat daartoe van schroefdraad is voorzien.

Volgens de uitvinding wordt bij een motor van de eerstbedoelde soort de opening in de krukkast gesloten door een schroefdeksel, dat tevens een krukasleger, bij voorkeur een kogelleger, bevat.

Verder is volgens de uitvinding tusschen de kruk en het op de as bevestigde rondsel het tweede leger om de krukas aangebracht welk leger in een opening aan de andere zijde van de krukas geschoven is, waar het stuit tegen een naar binnen stekenden kraag van de krukkast, van welken kraag de binnenmiddellijn grooter is dan de buitenmiddellijn van het rondsel.

Deze constructie is goedkoop, omdat zoowel het deksel als de beschreven gedeelten van de krukkast op een draaibank kunnen worden afgewerkt. De centreering is onberispelijk. De montage is gemakkelijk en bij het aanschroeven van het deksel kan men voortdurend controleeren of de onderdeelen goed loopen met niet meer dan de noodzakelijke speling. De groote middellijn van de schroefverbinding en het groote draagvlak van het deksel in den krukkastwand voorkomen slijtage en lostrillen. Voor een kogelleger is in zulk een deksel ruim plaats, zonder dat de axiale lengte van den motor vergroot behoeft te worden.

Op de teekening is de uitvinding met een uitvoeringsvoorbeeld toegelicht.

Fig. 1 is een verticale langsdoorsnede.

Fig. 2 is een doorsnede over de lijn II—II in fig. 1 en verder een aanzicht. Enkele deelen zijn weggenomen gedacht.

Fig. 3 is een verticale dwarsdoorsnede.

De krukkast en de cylinder van den motor zijn vereenigd tot één gietstuk 1. Onder in de krukkast is een dop 2 geschroefd. De diameter van de daarmede afgesloten opening is zoo groot, dat de zuiger 3 door deze opening naar binnengeschoven kan worden.

Rechts in het gietstuk 1 bevindt zich een schroefdeksel 4, dat een opening afsluit, groot genoeg voor het doorlaten van de krukas 5. Wordt eerst de zuiger 3 met de drijfstang 6 naar binnen gebracht en vervolgens de krukas, waarop het kogelleger 7 en het rondsel 12 gemonteerd zijn, dan kan men de kap 8 van den drijfstang

Afdrukken bij het Bureau voor den Industrieelen Eigendom, te 's-Gravenhage.
Prijs per ex. f 0.60

kop met de schroeven 9 bevestigen en deze laatste borgen. Het schroefdeksel 4 bevat het kogelleger 10.

Bij het inbrengen van de krukas 5 schuift het rondsel 12 door de opening, gevormd door den kraag 30, maar het kogelleger 7 stuit tegen dien kraag. Aldus wordt de krukas tusschen de legers 7 en 10 opgesloten.

Op het deksel 4 worden (niet geteekende) spoelen van den vliegwielmagneet-ontsteker bevestigd. Het vliegwiel 11 bevat den magneet en den onderbreker.

Het rondsel 12 werkt op het rad 13 met een overbrenging van één op twee. De as 14 van het rad 13 is voorzien van de nokschijf 15 en draagt in de kogellegers 16 en 17, waarvan het laatste in het deksel 18 ligt. In afwijking van de teekening kan deze afdekking gedeeltelijk één geheel met het gietstuk 1 vormen en kan het kogelleger 17 zijn gevat in een schroefdeksel van het type van deksel 4. De snaarschijf 19 is op de nokas 14 gemonteerd. De snaar 20 krijgt derhalve matige snelheid.

De tusschenhefboom 21 brengt de beweging van de nok 15 over op den klepstooter 22, die weder op de stang 23 van de uitlaatklep werkt. De inlaatklep 24 staat onder den invloed van de veer 25. De bougie 26 geeft bij iedere omwenteling een vonk, hetgeen niet hinderlijk is.

Aan het hoofdgietstuk 1 bevindt zich een aangegoten schuine stoel 27. Deze en de bijbehoorende kap 28 omvatten de schuine stang 29 van het rijwielgeraamte.

Uit de teekening blijkt, dat montage en demontage van den motor in zeer korten tijd kunnen geschieden. Bij montage van het schroefdeksel 4 kunnen geen fouten worden gemaakt. Het rondsel 12 kan, nadat het kogelleger 7 op de krukas is geschoven, dadelijk worden vastgezet, omdat het door den kraag 30 in het hoofdgietstuk 1 geschoven wordt bij het inbrengen van de krukas.

Conclusies.

1. Viertactverbrandingsmotor voor het drijven van een rijwiel of dergelijk doel, einde, waarbij de cylinder en de krukkast tot een hoofdgietstuk zijn vereenigd en de krukkast een door een deksel gesloten zijdelingsche opening bezit voor het van binnen brengen van de krukas met een daarop aangebracht rondsel, dat in het tandwiel van de nokas grijpt, met het kenmerk, dat de opening in de krukkast is gesloten door een schroefdeksel, dat tevens een krukasleger, eventueel kogelleger bevat.

2. Viertactverbrandingsmotor volgens conclusie 1, met het kenmerk, dat tusschen de kruk en het op de as bevestigde rondsel het tweede leger, eventueel kogelleger, om de krukas is aangebracht, welk leger in een opening aan de andere zijde van de krukas is geschoven, waar het stuit tegen een naar binnen stekenden kraag van de krukkast, van welken kraag de binnenmiddellijn grooter is dan de buiten middellijn van het rondsel.

Hierbij 1 blad teekeningen.

Department of Commerce

UNITED STATES PATENT OFFICE

TO ALL PERSONS TO WHOM THESE PRESENTS SHALL COME, GREETING:

THIS IS TO CERTIFY that the annexed is a true copy from the records of this office of an Official Translation of Netherlands Patent No. 32,802, dated August 10, 1932, to Bilthovensche Metaalindustrie, for Four-cycle combustion motor for driving a bicycle or for a similar purpose, in which the cylinder and the crankcase are united to form a main casting and the crankcase possesses a lateral opening closed by a cover for inserting the crankshaft with a pinion mounted thereon, engaging with the gearwheel of the camshaft.

IN TESTIMONY WHEREOF I have hereunto set my hand and caused the seal of the Patent Office to be affixed at the City of Washington, this third day of February, in the year of our Lord one thousand nine hundred and fifty-five and of the Independence of the United States of America the one hundred and seventy-ninth.

ATTEST:

(Sgd) C. T. Rains
Head, Manuscript and
Lithographic Branch.

ROBERT C. WATSON
Commissioner of Patents.

Translation of Netherlands Patent No. 32,802, Class 46a-6 (46c-4), to Bilthovensche Metallindustrie, Bilthoven; application Netherlands 62173 filed August 10, 1932; laid open to inspection December 15, 1933; published May 15, 1934; date of patent April 17, 1934.

Four cycle combustion motor for driving a bicycle or for a similar purpose, in which the cylinder and the crankcase are united to form a main casting and the crankcase possesses a lateral opening closed by a cover for inserting the crankshaft with a pinion mounted therein, engaging with the gearwheel of the camshaft.

The object of the invention is a small combustion motor, which is so simply constructed, that the costs of manufacture are low and the assembling is particularly simple. The utmost reliability of operation is sought at the same time. A condition for attaining this last goal is that the making of the parts, despite the low cost, should be of the highest quality.

A four-cycle combustion motor of the type described in the title is disclosed in British Patent No. 153685. In this case the crankshaft is made one-sided and the lateral opening in the crankcase is closed by a tight cover with bolts. The pinion is out in the crankshaft itself and thus has the same center line.

On the other hand, a two-cycle combustion motor, also with a one-sided crankshaft, but with a separate cylinder and crankcase, is disclosed by the French Patent No. 321400. In this case also a lateral opening is left in the crankcase, through which the one-sided crankshaft is inserted obliquely and which is then closed by the crankshaft bearing, which is therefore provided with screw thread.

According to the invention in a motor of the type first mentioned the opening in the crankcase is closed with a screw cover, which at the same time receives a crankshaft bearing, preferably a roller bearing.

Furthermore, according to the invention, between the crank and the pinion attached to the shaft a second bearing is arranged around the crankshaft, which is inserted in an opening in the other side of the crankshaft, where it stops against an inwardly projecting collar of the crankcase, whose internal center line is greater than the external center line of the pinion.

This construction is cheap, because both the cover and the parts described of the crankcase can be finished on a lathe. The centering is perfect. The mounting is easy and in screwing on the cover we can constantly check whether the parts are working well with not more than the necessary clearance. The long center line of the screw connection and the large bearing surface of the cover in the crankcase wall prevent wear and shaking loose. In such a cover there is ample room for a ball bearing, without the necessity of enlarging the motor.

The invention is illustrated on the drawing in an embodiment. Figure 1 is a vertical longitudinal section. Fig. 2 is a cross-section following line 11-11 in Fig. 1, and also an elevation. A few parts are supposed to be removed. Fig. 3 is a vertical cross-section.

The crankcase and the cylinder of the motor are united in a casting 1. A cap 2 is screwed on underneath the crankcase. The diameter of the opening thus closed is so great, that the piston 3 can be inserted through this opening.

To the right in the casting 1 there is a screw cover 4, closing an opening, which is large enough to admit the crankshaft 5. If the piston 3 with the driving rod 6 is first placed inside and then the crankshaft, on which the ball bearing 7 and the pinion 12 are mounted, then the

cap 8 of the head of the driving rod can be fastened with screws 9 and secure it. The screw cover 4 receives the ball bearing 10.

In introducing the crankshaft 5 the pinion 12 slides through the opening formed by the collar 30, but the ball bearing 7 stops against this collar. The crankshaft is thus enclosed between the bearings 7 and 10.

Coils (not shown) of the flywheel magnet igniter are attached to the cover 4. The flywheel 11 contains the magnet and the switch.

The pinion 12 acts on the wheel 13 with a transmission ratio of one to two. The shaft 14 of the wheel 13 is provided with the cam disk 15 and enters the ball bearings 16 and 17, of which the latter lies in the cover 18. As a variation from the drawing this cover may in part form a whole with the casting 1 and the ball bearing 17 may be contained in a screw cover of the type of the cover 4. The sheave 19 is mounted on the cam shaft 14. The rope 20 thus obtains moderate speed.

The intermediate lever 21 transmits the movement of the cam 15 to the valve lifter 22, which in its turn acts on the stem 23 of the exhaust valve. The inlet valve 24 is under the influence of the spring 25. The spark plug 26 at every revolution produces a spark, which causes no trouble.

An oblique cradle 27 is cast on the main casting 1. The latter and the appertaining cap 28 enclose the oblique rod 29 of the bicycle frame.

From the drawing it appears that the mounting and dismounting of the motor can take place in a very short time. In mounting the screw cover 4 no errors are made.

The pinion 12, after the ball bearing 7 has been inserted on the crankshaft, can be definitely secured, because it is inserted through the collar 30 in the main casting, when the crankshaft is introduced.

PATENT CLAIMS

1. Four-cycle combustion motor for driving a bicycle or for a similar purpose, in which the cylinder and the crankcase are united to form a main casting and the crankcase possesses a lateral opening closed by a cover for inserting the crankshaft with a pinion mounted thereon, engaging with the gearwheel of the camshaft, characterized thereby, that the crankcase is closed by a screw cover, which at the same time receives a crankshaft bearing, which may be a ball bearing.

2. Four-cycle combustion motor according to patent claim 1, characterized thereby, that between the crank and the pinion attached to the shaft a second bearing is arranged around the crankshaft, which may be a ball bearing and which is inserted in an opening in the other side of the crankshaft, where it stops against an inwardly projecting collar of the crankcase, whose internal center line is greater than the external center line of the pinion.

Pat. Of. Tr/GWH

2/4/55

LIBRARY
SUPREME COURT, U.S.

Office - Supreme Court, U.S.
FILED
DEC 23 1957
JOHN T. FEY, Clerk

IN THE

Supreme Court of the United States

OCTOBER TERM 1957

No. 640

BRIGGS & STRATTON CORPORATION,
Plaintiff-Petitioner,

vs.

CLINTON MACHINE COMPANY,
Defendant-Respondent

BRIEF FOR RESPONDENT IN OPPOSITION TO THE PETITION FOR WRIT OF CERTIORARI

EDWIN J. BALLUFF,
ARTHUR RAISCH,
CHARLES R. McKINLEY,
3153 Penobscot Building,
Detroit 26, Michigan,
Counsel for Respondent.

Interstate Brief & Record Co., 642 Beaubien St., Detroit 26, Michigan

INDEX

	Page
Statement of the Case	1
Argument	7
I. Lacking Novelty, the Lechtenberg Patent Raises No Issue under 35 USC 101, Which Requires that a Patentable Invention or Improvement Be *New*	7
II. The Lechtenberg Patent Claims, Which Define Nothing More Than a Combination of Old Elements Arranged in an Old Way, Were Properly Held Invalid on the Ground of Aggregation	9
III. This Case Presents No Occasion for This Court to Pass upon the Standard of Invention Embodied in 35 USC 103	10
IV. This Case Presents No Issue That Requires Review by This Court	12
Conclusion	15

AUTHORITIES CITED

Elliott Machine Co. v. Rothchild & Co., et al., 235 F. 896	11
Graver Tank & Mfg. Co. v. Linde Air Products Co., 336 U. S. 271	3, 5
Great Atlantic & Pacific Tea Co. v. Supermarket Equipment Corp., 340 U. S. 147	10, 12, 13
Hotchkiss v. Greenwood, 11 How. 248	10
Jungersen v. Ostby & Barton Co., 335 U. S. 560	13
Lincoln Engineering Co. v. Stewart-Warner Corp., 303 U. S. 545	10
Ludwig, Ex Parte, 95 USPQ 296	11

IN THE

Supreme Court of the United States

OCTOBER TERM 1957

No. 640

BRIGGS & STRATTON CORPORATION,
Plaintiff-Petitioner,
vs.
CLINTON MACHINE COMPANY,
Defendant-Respondent

BRIEF FOR RESPONDENT IN OPPOSITION TO THE PETITION FOR WRIT OF CERTIORARI

STATEMENT OF THE CASE

This is a typical patent case and involves no more than the usual and ordinary application of well established principles of patent law to claims fully met by the prior art. The District Court found petitioner's patent invalid and the Court of Appeals affirmed. The Courts below had

no problem in recognizing lack of invention when the prior art was adequately presented, and there is no conflicting decision of any other court.

Petitioner (appellant below), long dominant in the small engine industry (R. 400), sought through the assertion of three patents originally involved in the case to monopolize old and well-known techniques and practices of the engine art. In the original trial the Court held two of petitioner's patents invalid, but, greatly impressed with the similarities of petitioner's and respondent's lightweight engines and not then being fully apprised of the prior art, erroneously sustained the patent asserted here under the misapprehension (withdrawn Finding 15, R. 201) that Lechtenberg had contrived a new line of separation (now characterized by petitioner as Lechtenberg's "slice") between the cover and the main casting.

The lightweight engines of both petitioner and respondent make common use of the same old expedients and techniques of the prior art and are made and competitively sold for the same use and customer requirements, and often to the same customers. Defendant's cross-appeal on the question of infringement was dismissed as moot by the Court of Appeals, but as respondent's cylinder-crankcase block incorporating a cast iron cylinder liner is not a SINGLE or ONE casting as specified in each of Lechtenberg's claims in issue, respondent asserts that its engines do not infringe.

After the existence in the prior art of the exact structure and arrangement claimed in the patent here involved was brought to its attention at the supplemental trial, the trial court recognized that its original "finding [No. 15, R. 201] as to patentable invention was erroneous" (R. 459); found "that the adaptability of engines to various

and different uses by means of interchangeable bottom parts was not new," (R. 459), and held that the patent asserted here was "an aggregation of old elements which, in the aggregation, perform and produce no new or different function or operation than that heretofore performed or produced by them" (R. 460).

In affirming, the Court of Appeals pointed out that appellant's extended argument does not "proceed upon any reference to or quotations from the claims of the patent" and that "the claims of the patent broadly cover two cycle single cylinder engines and both sand and die cast cylinder and crankcase elements and * * * contain no such limitation or definition of invention as appellant contends for" (Petition, A-6). Further, the Court of Appeals (relying on *Graver Tank & Mfg. Co. v. Linde Air Products Co.*, 336 U. S. 271) specifically held that the Lechtenberg patent "cannot be saved by asserting limits to the claims not contained in them" (Petition, A-7), as petitioner in effect seeks to do in this Court.

Petitioner, admitting that the claims define old structural elements performing old functions, erroneously asserts that Lechtenberg "defines a new arrangement of those structural elements", or a "structural change" (Petition, pp. 2, 3, 4, 8, 9, 10 and elsewhere), relying heavily on the concurring opinion of Judge Sanborn in the Court of Appeals. The trial court's original and now admittedly erroneous Finding No. 15 was based upon the mistaken belief that Lechtenberg's separation of the cover from the main casting was not disclosed in the prior art, whereas such arrangement and separation are clearly shown in the prior art relied upon at the supplemental hearing, namely, the Bosma (R. P. 335), Conover (R. P. 305), and Vansickle (R. P. 1) patents and the prior art Lauson engine (R. 244-250, 357-358, Ex. D-78, Ex. D-83)—prior art not considered by the Patent Office.

While the petition repeatedly uses the term "slice" to define Lechtenberg's invention, such term does not appear in the Lechtenberg patent and was first used in this case in petitioner's PETITION FOR REHEARING before the Court of Appeals. The "slicing" petitioner now asserts to be novel with Lechtenberg, and designated heretofore as the "structural relationship", "separation", or the "parting line", is the same as that of Conover, Bosma, Vansickle, and the prior art Lauson engine.* The trial court's reversal of its original finding of invention in the separation of the engine body demonstrates that the asserted "new arrangement" or "structural change", now deceptively presented in the guise of Lechtenberg's "slice", is *not* new and involves *no* change over the prior art. Petitioner, in asserting that "Nobody in the industry had ever before thought of putting the 'slice' in the place where Lechtenberg said it should be" (Petition, p. 9) wholly ignores the above-mentioned prior art.

Petitioner's assertion that its patent relates to four-cycle engines is only a half-truth because, as held by the Court of Appeals, "Some of the claims of the patent broadly cover two cycle single cylinder engines" (Petition, A-6). See patent claim 1 (R. P. 532).

Petitioner's assertion that Lechtenberg's "slice" made die casting *economically* feasible, tacitly confesses the feasibility of die casting the prior art engines and is misleading because die cast two-cycle engines and four-cycle engine parts are admittedly old (R. 255, 269, 321, 369-370). The record shows that the die casting techniques are the same for both two and four cycle engines (R. 293) and that die casting of either presented no problem (R. 281, 282).

---

*Claims *not* in issue, such as Claim 10, refer to a "plane of parting" between the main and cover castings, but no such plane is specified in the claims in issue here.

In emphasizing "producibility" here, as it did in the Court of Appeals (where it was labeled "die-castability"), petitioner not only conveniently overlooks the fact that the Lauson engine could have been die cast (R. 252, 281, 417) and that the Conover patent discloses, Figs. 17 and 18, a die cast single cylinder engine, but wholly ignores the trial court's express Findings, holding Lechtenberg invalid, that:

> "The casting of the cylinder and crankcase as an integral unit was not new.
>
> "The die casting of engine parts was not new.
>
> "The use of aluminum was not new.
>
> "Having one wall of the engine removable was not new.
>
> "Having the bottom cover of the engine removable was not new.
>
> "* * * the adaptability of engines to various and different uses by means of interchangeable bottom parts was not new." (Findings 15 and 16, R. 458, 459.)

The Lechtenberg patent (col. 1, lines 43-44, 55-56, R. P. 527) specifically defines casting to include both sand casting and die casting. The *claims* make no mention of die casting and are drawn broadly to a cylinder and crankcase which is a *single* or *one* casting, regardless of the casting method practiced to obtain such casting. The claims in issue do not require that the cover be a casting, or be formed of only one piece, although some of the claims *not* in issue specify that the cover is a casting. (See claim 10.) Petitioner's attempt to salvage the claims by interpretative limitation to "economically feasible die casting," a practice condemned by this Court in *Graver Tank & Mfg.*

Co. v. Linde Air Products Co., supra, was flatly rejected by the Court of Appeals for the reason that the Lechtenberg patent "has no claims that would justify a patent for invention in the method of production of its elements" (Petition A-7).

Petitioner's Figures 1, 2 and 4 (opposite pages 6, 7 and 10, respectively, of the Petition) are not part of the record below, although they appeared in petitioner's main brief before the Court of Appeals. While Figure 4 may correctly reflect prob'ems peculiar to the adaptability of *petitioner's* prior engines, it does not fairly or accurately reflect the expedients of adaptability and interchangeability known and used in the art by respondent and others prior to Lechtenberg and found by the courts below to be in the prior art (R. 459-460). While petitioner's Figure 3 may illustrate *some* prior art four cycle engine bodies, it does not illustrate the Lauson, Conover or Vansickle engines, which have the same "slice" as Lechtenberg's.

Petitioner's characterization of the prior art is incomplete and misleading as to the state of the prior art upon which the courts below relied in holding the claims invalid. The fact is that all of the claims read squarely upon the prior art, and despite petitioner's repeated assertions to the contrary, there is no novelty in Lechtenberg's claimed structure nor any new result achieved thereby.

Petitioner incorrectly asserts (p. 9) that it is Lechtenberg's "slice" which "permits an engine manufacturer with only one cylinder-crankcase mold to turn out a full line of four-cycle engines of one size". Clinton has been using this practice in its 700 Series engines since at least 1949 (R. 258-267, 295, 321). Conover discloses this concept (R. 349-350, R. P. 310, Col. 1, lines 48-52), and this expedient was also used by Lauson in its prior art engines

using the same main casting but different covers for engines made for use on power mowers and as outboards (R. 246-250, 257-258). The producibility technique claimed for Lechtenberg is nothing but the old expedient of interchangeability of engine parts, a practice notoriously common in the engine industry where it has long been used to obtain model variations without a full set of tooling for each different model produced. The District Court specifically held that "It now appears *beyond a reasonable doubt* that prior to Lechtenberg * * * there was wide prior use of interchangeable parts to adapt an engine to various and different uses" (Findings No. 16, R. 460, emphasis added.)

ARGUMENT

I. Lacking Novelty, the Lechtenberg Patent Raises No Issue under 35 USC 101, Which Requires that a Patentable Invention or Improvement Be NEW.

Petitioner's entire argument is based upon the completely erroneous premise that Lechtenberg claims an engine which is structurally changed from those in the prior art. In its effort to advance some ground on which this Court would be warranted in reviewing this case, the Petition erroneously asserts that there are in this case "express findings that the claims distinguish from the prior art" (p. 12), that: "The courts below expressly found that Lechtenberg's structural arrangement is novel" (p. 18), and that: "all of the Lechtenberg claims are directed to a structural change which the courts below have expressly found to be novel" (p. 15). Petitioner has not pointed out where such findings appear and, in fact, neither the District Court's Opinion nor Judge Woodrough's

Opinion for the Court of Appeals contain any such findings.

Petitioner repeatedly asserts that Lechtenberg's "invention" made it possible to die cast a four-cycle engine body for the first time. Such assertion is merely an unsupported conclusion and wholly ignores the fact that the *claimed* structure by which such result is allegedly brought about by Lechtenberg is identical to that disclosed in the prior art. The claims read directly upon the prior art and thus it is not Lechtenberg's theoretical "slice" that made die casting of an engine possible, because such prior art engines, having the same "slice," could have been die cast (R. 252, 282, 417) with a comparable reduction in weight and cost. Other than the gratuitous assertion that Lechtenberg's "slice" is new, petitioner significantly makes no effort to point out how any claim avoids the prior art and relies for this vital part of its case on erroneous assertions as to what the courts below have held. As stated by the Court of Appeals, petitioner's argument "does not include or proceed upon any reference to or quotations from the claims of the patent" (Petition A-6).

Once it is realized that Lechtenberg has in fact no structural change and claims nothing that is novel, then it is clear that there is no issue under 35 USC 101 that needs to be resolved by this Court. Lechtenberg's claims are for an internal combustion engine and that is clearly the type of subject matter for which a patent may be had, *providing* the requirements of novelty and invention are met. The decisions below correctly held that such requirements have not been met.

Neither the District Court nor the Court of Appeals have held, either expressly or by implication, that the kind of "invention" that Lechtenberg made is not the kind that

falls within the statutory classes set forth in 35 USC 101, and petitioner raises a false issue in so asserting.

II. The Lechtenberg Patent Claims, Which Define Nothing More Than a Combination of Old Elements Arranged in an Old Way, Were Properly Held Invalid on the Ground of Aggregation.

Petitioner's argument that Lechtenberg's claims are not subject to the defense of "aggregation" because he was trying to improve the producibility of an engine—again supported with erroneous assertions that Lechtenberg provided a new arrangement which the Courts below expressly found to be novel—ignores the fact that all of the elements claimed are old and perform the same functions they have always performed, without any new result.

Despite petitioner's argument concerning producibility of an engine body, the fact is that the claims of the Lechtenberg patent are not directed to a method of producing the same. The "slice" by means of which the main casting is separated from the cover is not in fact a new "slice" and is exactly the same as that disclosed in the prior patents to Vansickle, Bosma and Conover and utilized in the prior use Lauson engine. The advantages of the "slice" now attributed to Lechtenberg—the use of interchangeable covers to adapt the engine to different uses—were present in the Lauson prior use engine which had interchangeable covers to adapt it for lawn mower or outboard motor use (R. 246-250). The same concept is disclosed in the Conover patent (R. 349-350).

In attempting to save its Lechtenberg patent petitioner is in effect asserting that it alone is entitled to produce an old and unpatentable prior art structure by an old and well-known production method (die casting), and this de-

spite the fact that the claims under which the monopoly is asserted read directly on the prior art and say nothing about die casting, and the specification clearly treats die casting and sand casting as equivalents. Petitioner's suit against Lauson (Petition, p. 22) well demonstrates petitioner's attempt to monopolize the old techniques and practices of the prior art, as the engine there accused is the die cast counterpart (R. 253-254) of the Lauson prior use engine upon which the courts below relied in invalidating Lechtenberg.

"Producibility," the adaptability found by the trial court to be old, adds nothing to the Lechtenberg patent because the claims merely define an old structure arranged in an old way and producing no new result. Lechtenberg's claims are clearly invalid under the well-recognized test of invention appropriate to claims which define a combination of old elements. *The Great Atlantic & Pacific Tea Co. v. Supermarket Equipment Corp.*, 340 U. S. 147; *Lincoln Engineering Co. v. Stewart-Warner Corp.*, 303 U. S. 545; and *Hotchkiss v. Greenwood*, 11 How. 248. To hold otherwise would in effect sanction the repatenting of the prior art.

III. This Case Presents No Occasion for This Court to Pass upon the Standard of Invention Embodied in 35 USC 103.

Whether 35 USC 103 sets forth any different standard of invention than that embodied in the decisional law of this Court is a question that does not arise in this case. The test of "obviousness" laid down in Section 103 contains a condition precedent that the invention in question be not identically disclosed or described in the prior art. In the present case the structure defined in Lechtenberg's claims is identical to structures in the prior art, and thus

whether Lechtenberg's claimed structure would have been obvious is a question that does not arise since the claims are invalid as a matter of law.

The Conover patent discloses a single cylinder die cast aluminum engine in which the only removable wall is that wall through which the power takeoff end of the crankshaft passes, exactly as claimed by Lechtenberg. To use that same construction in a four-cycle engine is too obvious to require extended discussion.

Since the prior art discloses engine bodies in which the "slice", or separation, is made at the wall through which the power takeoff end of the crankshaft passes, and since the Lauson engine and the Conover patent specifically disclose the use of interchangeable covers for such wall of the crankcase to adapt the engine for various uses, the use and advantages of such a construction are a part of the public domain and cannot be monopolized by petitioner. While petitioner asserts that Lechtenberg achieved a universally adaptable engine body, the fact is that respondent's prior art sand cast 700 Series Engine had a universally adaptable engine body with a series of interchangeable covers and adapters to adapt it to all of its customer requirements for a full series of engines of a given size, including both horizontal and vertical shaft engines (R. 295, 321, 433).

As a matter of law, the expedient of interchangeability of parts is unpatentable. See *Elliott Machine Co. v. Rothchild & Co. et al.* (C. A. 7, 1916), 235 F. 896, 897, 898, a case directly in point. Also directly in point is *Ex parte Ludwig, et al.* (Patent Office Board of Appeals, 1951), 95 USPQ 296, 298, 299, where the Patent Office refused a patent on a convertible motor having certain basic parts (as the cylinder crankcase here) common to all different

types of motors, and to which were added different interchangeable parts (as the covers here), to provide a line of motors.

It is significant that despite petitioner's assertions concerning the failure of others to achieve what Lechtenberg allegedly achieved, there is no evidence in the record of any prior unsuccessful effort of others to die cast a four-cycle engine body. When power lawn mowers became so popular that the prospective market warranted the large expenditure for dies, the industry logically took advantage of the obvious savings offered by die casting techniques. As stated by the witness Lechtenberg: "Die casting is a matter of economics" (R. 370). Since Lechtenberg's claims define nothing that is new or different from the prior art, the courts below could not logically have held Lechtenberg's claimed invention to pass the test of "obviousness" set forth in 35 USC 103.

IV. This Case Presents No Issue That Requires Review by This Court.

The Lechtenberg patent is a combination patent in a crowded art and the structure defined in the claims of the patent is fully disclosed in the prior art.

The Courts below have not incorrectly interpreted 35 USC 101 as urged by petitioner. The decisions below correctly recognized the Lechtenberg patent for what it was—a patent in which the claims define a structure that is old and unpatentable in view of the prior art.

The Courts below carefully scrutinized Lechtenberg's claims in accordance with the recognized test of invention stated in the *A & P* case, *supra*, and other decisions involving claims for a combination of old elements arranged in an old way and performing no new function and achieving

no new result. Petitioner asserts that Lechtenberg's structure makes possible a substantial reduction in weight and cost of an engine, but it is clear that petitioner is referring to its commercial practices rather than the structure defined in the claims of the Lechtenberg patent. Quite aside from the fact that the claims will read on a sand cast iron engine as well as a die cast aluminum engine, the fact is that the reduction in cost is obtained only if sufficient quantities of the engine are commercially produced, and certainly patent claims cannot be sustained on the theory that the patent owner elects to produce his claimed device by an old and well-known production method which has always resulted in cost reduction providing the demand warrants high production.

Petitioner relies heavily on the commercial success of its lightweight engine, but the record fails to show that the commercial success can be attributed to the structure defined in the claims of the patent. As stated in the *A & P* case, *supra*, "commercial success without invention will not make patentability."

Die casting techniques have for many years been available and used for the production of engine bodies and many other parts. That Briggs & Stratton, the largest and dominant figure in the small engine field, may have been the first to commercially produce a die cast four-cycle engine in production quantities means only that they were willing for competitive reasons to make the necessary expenditures for dies. Merely being the first to make a four-cycle engine by using a well-known process (when the economic factors in the industry are favorable) used in making two-cycle engines and in numerous other and related arts, does not give petitioner the right to a monopoly to prevent others from using what had formerly been freely available to them. *Jungersen v. Ostby & Barton Co.*, 335 U. S. 560.

While the claims contain no reference to die casting, nothing could be more obvious than to die cast a part rather than to sand cast it if the expected sales volume will warrant the expenditure for the die casting dies.

Articles such as "THE BOOMING MARKET FOR POWER LAWN MOWERS" (Ex. D-108, R. 297-301) and "CUT IN ON THE POWER MOWER BOOM" (Ex. D-109, R. 303-311), both published in 1951, several years prior to introduction of Lechtenberg's engine, show that the asserted commercial success of the lightweight engine was due to a previously developed tremendous demand for engines rather than to any cost reduction that well-known die casting techniques bring about. See also the ten-year sales record on power lawn mowers given in Ex. D-110 (R. 319).

There is no issue arising under 35 USC 103 in this case since the Lechtenberg claims read directly upon the prior art. In the absence of novelty in the claimed structure, it necessarily follows that the claimed structure is obvious within the meaning of 35 USC 103. In any event, whether tested by 35 USC 103 or any other standard of invention, the Lechtenberg patent claims nothing that is new. The courts below have made the definitive pronouncement concerning validity of the Lechtenberg patent that petitioner seeks in this Court.

CONCLUSION

Petitioner has not shown that the decisions below have incorrectly interpreted any section of the patent statutes, nor has petitioner shown that this case presents any unresolved question of patent law that should be reviewed by this Court. It is therefore submitted that the Petition for Writ of Certiorari should be denied.

Respectfully submitted,

EDWIN J. BALLUFF,
ARTHUR RAISCH,
CHARLES R. McKINLEY,
3153 Penobscot Building,
Detroit 26, Michigan,
Counsel for Respondent.

COPY
SUPREME COURT, U.S.

Office Supreme Court, U.S.
FILED
DEC 4 1957
JOHN T. FEY, Clerk

IN THE

SUPREME COURT OF THE UNITED STATES

October Term, 1957

No. 640

BRIGGS & STRATTON CORPORATION,

Plaintiff-Petitioner,

v.

CLINTON MACHINE CO., INC.,

Defendant-Respondent.

PETITION FOR CERTIORARI TO THE UNITED STATES COURT OF APPEALS FOR THE EIGHTH CIRCUIT

IRA MILTON JONES
JAMES R. CUSTIN
110 East Wisconsin Avenue,
Milwaukee 2, Wisconsin,
Counsel for Petitioner

HAMMERSMITH-KORTMEYER CO. MILWAUKEE

INDEX

	Page
Opinions Below	2
Jurisdiction	2
Questions Presented	2
Statutes Involved	3
Statement of the Case	4
Reasons Why the Writ Should Be Granted	12
Argument	
I. The Courts Below Have Decided an Important Question Relating to the Interpretation of 35 U.S.C. § 101 Which Has Not Been But Should Be Decided by This Court	13
II. This Court Should Pass Upon the Question of Whether the Defense of "Aggregation" is Applicable to the Lechtenberg Claims	17
III. This Case Presents a Clear Cut Opportunity For This Court to Make a Definitive Pronouncement Upon the Standard of Invention Laid Down in 35 U.S.C. § 103	20
IV. The Importance of This Case to American Industry Warrants a Definitive Pronouncement by This Court Upon the Validity of the Lechtenberg Patent	22
Conclusion	23
Opinion of the Court of Appeals for the Eighth Circuit	A-1

Page

AUTHORITIES CITED

Eibel Process Co. v. Minnesota & Ontario Paper Co., 261 U.S. 45, 43 S. Ct. 322 ..... 13, 18-19

Goodyear Tire & Rubber Co. v. Ray-O-Vac Co., 321 U.S. 275, 64 S. Ct. 593 13

Hotchkiss v. Greenwood, 11 How. 248, 13 L. Ed. 683 21

Lyon v. Bausch & Lomb Optical Co., 224 F. (2d) 530 21

Sbicca-Del Mac v. Milius Shoe Co., 145 F. (2d) 389 15-16

IN THE

SUPREME COURT OF THE UNITED STATES

October Term, 1957

No.

BRIGGS & STRATTON CORPORATION,

Plaintiff-Petitioner,

v.

CLINTON MACHINE CO., INC.,

Defendant-Respondent.

PETITION FOR CERTIORARI TO THE UNITED STATES COURT OF APPEALS FOR THE EIGHTH CIRCUIT

Petitioner, Briggs & Stratton Corporation, plaintiff and appellant in the courts below, prays that a writ of certiorari issue to review the judgment herein of the United States Court of Appeals for the Eighth Circuit, insofar as the same relates to the patent to Lechtenberg No. 2,693,789.

Said judgment was entered October 9, 1957. The opinion of the Court of Appeals was released August 30, 1957 and rehearing was denied on October 3, 1957.

OPINIONS BELOW

The opinion of the United States District Court for the Northern District of Iowa, Eastern Division is reported at 147 F. Supp. 361, 112 U.S.P.Q. 93. The opinion of the Court of Appeals for the Eighth Circuit is reported at 247 F. (2d) 397, 114 U.S.P.Q. 438.

JURISDICTION

The judgment of the Court of Appeals sought to be reviewed was dated and entered October 9, 1957. A petition for rehearing was duly filed on September 18, 1957 and was denied without opinion on October 3, 1957.

This Court has jurisdiction under 28 U.S.C., Secs. 1254 (1) and 2101 (c).

QUESTIONS PRESENTED

1. Is it a patentable improvement, under 35 U.S.C. § 101, to rearrange the structure of an old and well known device, where the new arrangement brings about a phenomenal reduction in the cost of producing the device, without any reduction in its quality, but produces no new function in the device and results in no change in its operation?

2. Is a patent claim valid if it relates to a known device, comprising old structural elements performing their conventional functions, *but* defines a *new arrangement* of those old structural elements, by reason of which new arrangement the device is producible by a highly advantageous production process, long known and appre-

ciated but the use of which had never before been attainable for production of that device?

3. Where, in a highly developed, fiercely competitive industry, producing a device in a crowded art, a structural change which is recognized as novel brings about a 24% reduction in cost of the device and a 50% reduction in its weight (both cost and weight being recognized as crucial competitive factors), and provides other significant advantages without any offsetting disadvantages, is this sufficient evidence of unobviousness of the improvement to meet the test of patentability laid down in 35 U.S.C. § 103?

STATUTES INVOLVED

The following two sections of the Patent Codification Act (Title 35 U.S.C.) are here involved:

> § 101. *Inventions patentable.* Whoever invents or discovers any new and useful process, machine, manufacture, or composition of matter, or any new and useful improvement thereof, may obtain a patent therefor, subject to the conditions and requirements of this title.
>
> § 103. *Conditions for patentability; non-obvious subject matter.* A patent may not be obtained though the invention is not identically disclosed or described as set forth in section 102 of this title, if the differences between the subject matter sought to be patented and the prior art are such that the subject matter as a whole would have been obvious at the time the invention was made to a person having ordinary skill in the art to which said subject matter pertains. Patentability shall not be negatived by the manner in which the invention was made.

STATEMENT OF THE CASE

This is an action for infringement of three patents, two of which are no longer in issue.

The patent here involved, No. 2,693,789 (RP-509), issued to Leo Lechtenberg on November 9, 1954, and was assigned to plaintiff-petitioner, Briggs & Stratton Corporation. Claims 1, 2, 4, 5, 6, 7, 8, 14, 15 and 16 are charged to be infringed by defendant's model VS-100 engine. (R 450)

After a full trial on the merits the District Court held the claims in suit valid and infringed. (R 190-206) Defendant thereafter moved for a supplemental trial on the grounds of alleged newly discovered evidence. (R 473-474) Although most of the so-called newly discovered evidence had been before the court at the original trial, the District Court, out of an abundance of caution, reopened the case to permit both parties to present any additional evidence they wished to introduce. (R 207) After the additional trial proceedings, the District Court reversed its original decision and held the Lechtenberg patent invalid (R 438-464) adding, however, that the accused engine is "a striking and almost slavish copy" of the engine shown in the patent and that: "If the claims of the Lechtenberg patent * * * do define inventive combination, the defendant's accused engine clearly infringes." (R 460-461)

The Court of Appeals affirmed the decision of the District Court as to invalidity and held that: " * * * upon the adjudication that the patent is invalid the question of infringement becomes moot." (Appendix to this petition, pp. 7-8)

The Lechtenberg patent relates to single cylinder four-cycle engines, and covers a new arrangement of the body

elements of such an engine, which arrangement enables production of the engine body at much lower cost than had ever before been possible. (R 52, 56; RP-527, col. 1, line 81-col. 2, line 8)

Prior to the Lechtenberg invention the main body parts of single cylinder four-cycle engines had always been made as sand castings, usually of gray iron. (R 24, 57-58, 60, 67, 125, 245, 250-252, 255-256, 258, 369, 371-372) Sand casting is a slow, cumbersome and expensive production method, entailing tremendous amounts of hand labor necessarily performed under unpleasant conditions. (R 370) Iron is the best material for sand castings; aluminum can be sand cast, but a good aluminum sand casting is difficult to make. (R 416, 430)

Since 1914 there has been available a production method known as die casting which is largely automatic and therefore fast, inexpensive and accurate. Die casting works well with aluminum, and aluminum has long been recognized as a desirable material for engine bodies. (R 416, 417)

The single cylinder four-cycle engine industry is well over 40 years old. Its art is crowded and highly developed; decades of fierce competition have spurred a quest for every possible improvement. Nevertheless, as late as 1950 the main body parts of single cylinder four-cycle engines were still being made by the archaic and expensive sand casting process, although the industry had grown up with die casting and was thoroughly familiar with its techniques and advantages. (R 370-371)

This adherence to sand casting of the main body parts was especially significant because it was a foregone conclusion that anyone who could die cast the main body parts of a four-cycle engine would enjoy a spectacular

commercial success. Not only would die casting afford a tremendous price advantage, but the lighter engine that would result from the use of aluminum would open to the four-cycle engine vast new markets previously closed to it because of the weight and cost of its sand cast gray iron body. (R 54, 253, 255, 263, 266, 321-322, 419-420)

It is necessary to know something about the problems involved in designing a single cylinder four-cycle engine body in order to understand why the industry was unable to go to die casting of main body parts prior to Lechtenberg, and why the four-cycle engines now made with die cast body parts are close copies of the Lechtenberg arrangement; and an understanding of these facts is also necessary in order to appreciate the important unresolved questions of law raised by the decisions of the courts below.

A four-cycle engine body is essentially an irregularly shaped, completely closed box or chamber. One portion of the enclosure is the cylinder in which the piston reciprocates, and another portion is the crankcase, which houses the rotating crankshaft and cam shaft and the timing gears connecting them, and also provides an oil reservoir or "sump". Hence, the engine body can be visualized, in terms of function, as one integral piece, with seamless body walls that are continuous all the way around. Ideally, from the standpoint of function alone, that would be the best way to build it.

But an engine can not be built with a one-piece body, any more than a block of wood can be hollowed out without cutting through it or boring into it. Therefore an engine body has to be built in two or more parts which are assembled to form the body enclosure.

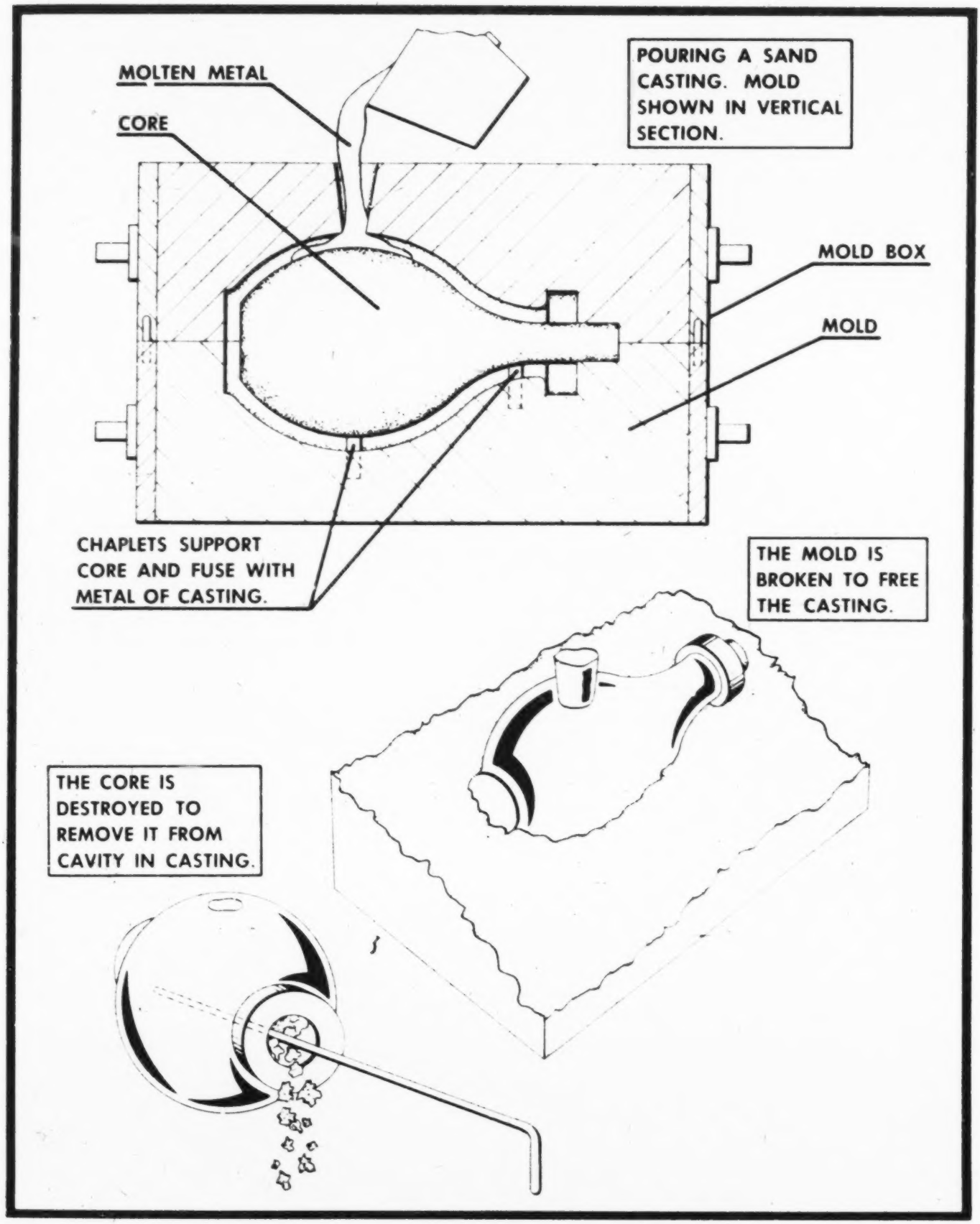

FIGURE 1

IN SAND CASTING, THE MOLD AND CORES ARE DESTROYED TO FREE THE CASTING, HENCE THERE ARE NO LIMITATIONS UPON THE FORM OF A PART TO BE SAND CAST.

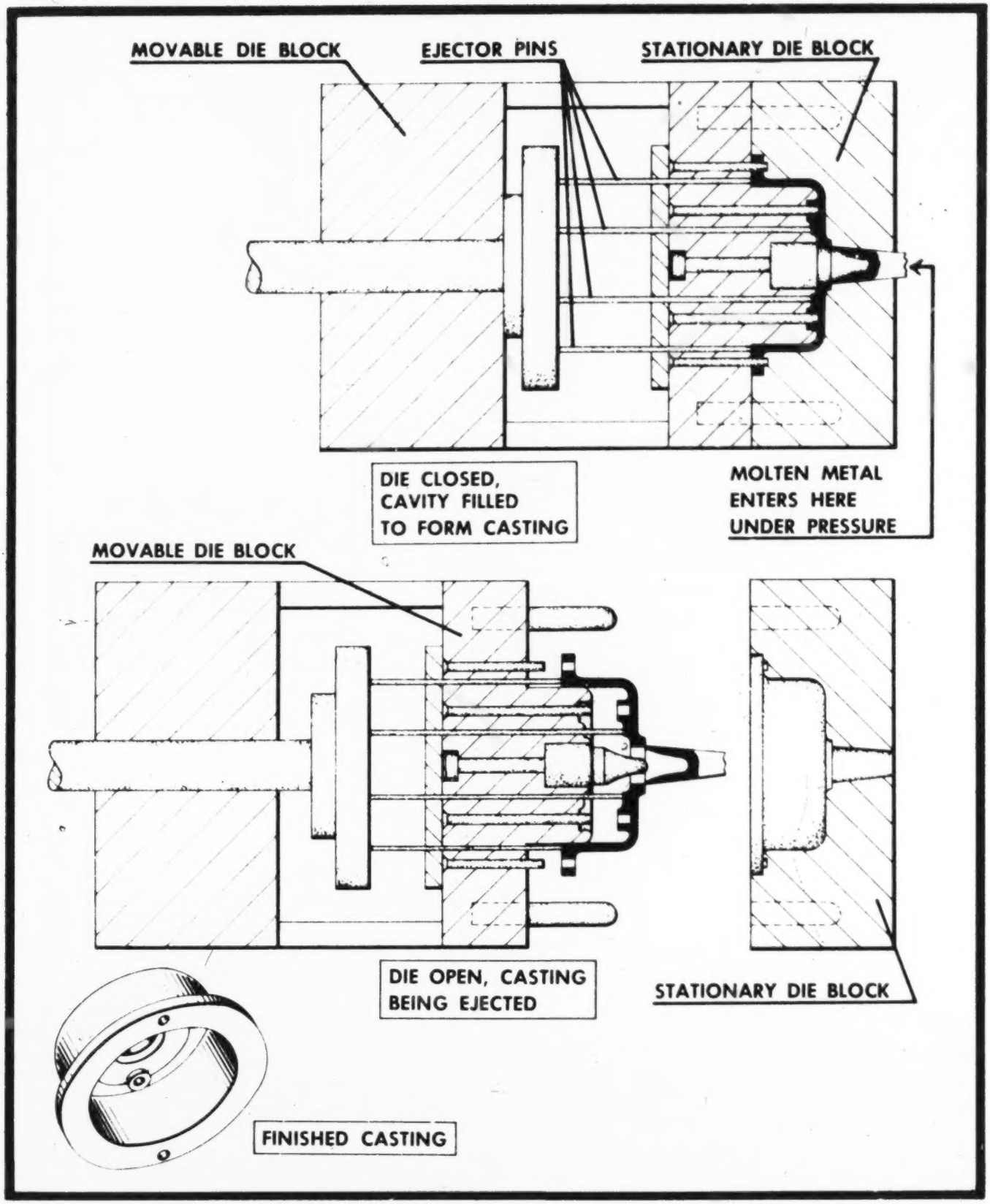

FIGURE 2

IN DIE CASTING, THE DIE AND CORES ARE RE-USED INDEFINITELY, AND THE CASTING MUST THEREFORE HAVE A FORM SUCH THAT THERE WILL BE NO DAMAGE TO DIE OR CASTING WHEN THE CASTING IS RELEASED FROM THE DIE MEMBERS. (ADAPTED FROM FIGS. 18 and 19, P. 28, 29 DESIGNING FOR ALCOA DIE CASTINGS; ALUMINUM CO. OF AMERICA, 1949).

Making the body in two or more parts has nothing to do with the way the engine operates or what it does — it is simply a production expedient.

In designing a four-cycle engine body that can be *made*, the designer has always visualized the engine body as the one-piece unit which would be the theoretical ideal, and he has made (in theory) certain slices or cuts through that hypothetical one-piece body, separating it into a number of parts. Those parts were what he actually produced and assembled.

Prior to Lechtenberg the hypothetical one-piece four-cycle engine body had been "sliced" in several different ways, but every prior art engine body had always been divided into *three* or more parts, plus a cylinder head. (R 61, 294, 418) Almost invariably, one of those parts was a large main cylinder-crankcase member that was complex and expensive to cast, and the other parts were smaller and less expensive castings that were fastened to the main casting to form the engine body.

Four-cycle single cylinder engines are used in a wide variety of applications and installations, each of which always necessitates some differences in the engine body. (R 50-51, 213) Prior to Lechtenberg most of these differences between the body castings of one engine model and another in a full "line" of engines of one size appeared on the main cylinder-crankcase body casting. (R 337-338, 55-56) *Always* for more than a generation, when the prior art four-cycle engine designer had made his theoretical slices through the engine body, he found that his big, main cylinder-crankcase member was not adaptable to all of the different engine models in his company's line. As a result, many *different* patterns or molds were needed to produce that one big part for a full "line" of

engines of one size, in order to take care of all of the different customer needs.

When engines were being sand cast, the large number of different main body casting patterns[1] needed to produce a full "line" of engines was a nuisance, and, while it was expensive to have so many different patterns, it was not prohibitively so. (R 55-56)

But a die casting die for a main cylinder-crankcase member costs in the neighborhood of $30,000.00. (R 31, 38) If there had to be dozens of different dies for the cylinder-crankcase members of a full "line" of engines, as was always the case with engine bodies having the prior art "slices", the investment in dies would have been prohibitive, and therefore a die cast engine was economically impossible, because it could not have been sold at a competitive price. Lechtenberg opened the door to the die casting of four-cycle engine body parts by making it economically feasible to die cast those parts.

In effect, Lechtenberg said to the art: "All these years you have been making your slices through the hypothetical one-piece engine body in the wrong place. All that you need to do is to make just one slice, dividing the engine body into only two parts. *If you make that slice in the right place* you will have a big, main cylinder-crankcase casting that will be universally adaptable, and it will also be die castable on ordinary die casting ma-

---

[1]In sand casting, sand mixed with a binder is packed around a pattern having the shape of the part to be cast, and the pattern is then removed from the sand to leave a correspondingly shaped cavity or mold. Molten metal is poured into the sand mold, and when the metal has cooled the mold is broken to free the casting

chines;[1] and you will have a small cover, complementing the big part, which can be inexpensively produced in a variety of forms to accommodate all of your many different customer requirements."

Thus, Lechtenberg's new "slice" permits an engine manufacturer with only one cylinder-crankcase mold to turn out a full line of four-cycle engines of one size, embodying *every* modification and adaptation that customers could conceivably want. The changes or variations from one engine modification to another are *all* incorporated in a simple cover casting that complements the main cylinder-crankcase part. (R P-528, col. 4, lines 26-39; P-532, col. 11, lines 29-63)

Nobody in the industry had ever before thought of putting the "slice" in the place where Lechtenberg said it should be. The decisions of the courts below not only avoid any statement that the claims of the Lechtenberg patent read on any prior art engine body, but expressly concede that there is novelty in Lechtenberg's arrangement. (R 460 (Finding 18); Appendix to this petition, P. 8)

In any event, the novelty of Lechtenberg's arrangement is apparent from the fact that there had never been a die cast four-cycle engine body prior to Lechtenberg, despite the tremendous incentive to go to die casting if it could be done, and the die cast four-cycle bodies produced since Lechtenberg's invention are close copies of his invention. As soon as defendant saw the new way

---

[1]The attainment of a universally adaptable main cylinder-crankcase casting would obviously have been a tremendous forward stride in the art, even if it had not been die castable. However, Lechtenberg's engine body not only has a universally adaptable main part but meets the stringent limitations on form imposed by the requirements of the die casting process—it is die castable. (R 275, 290-291)

BRIGGS & STRATTON MODEL 8 ENGINE, PLAINTIFF'S EXHIBIT 9.

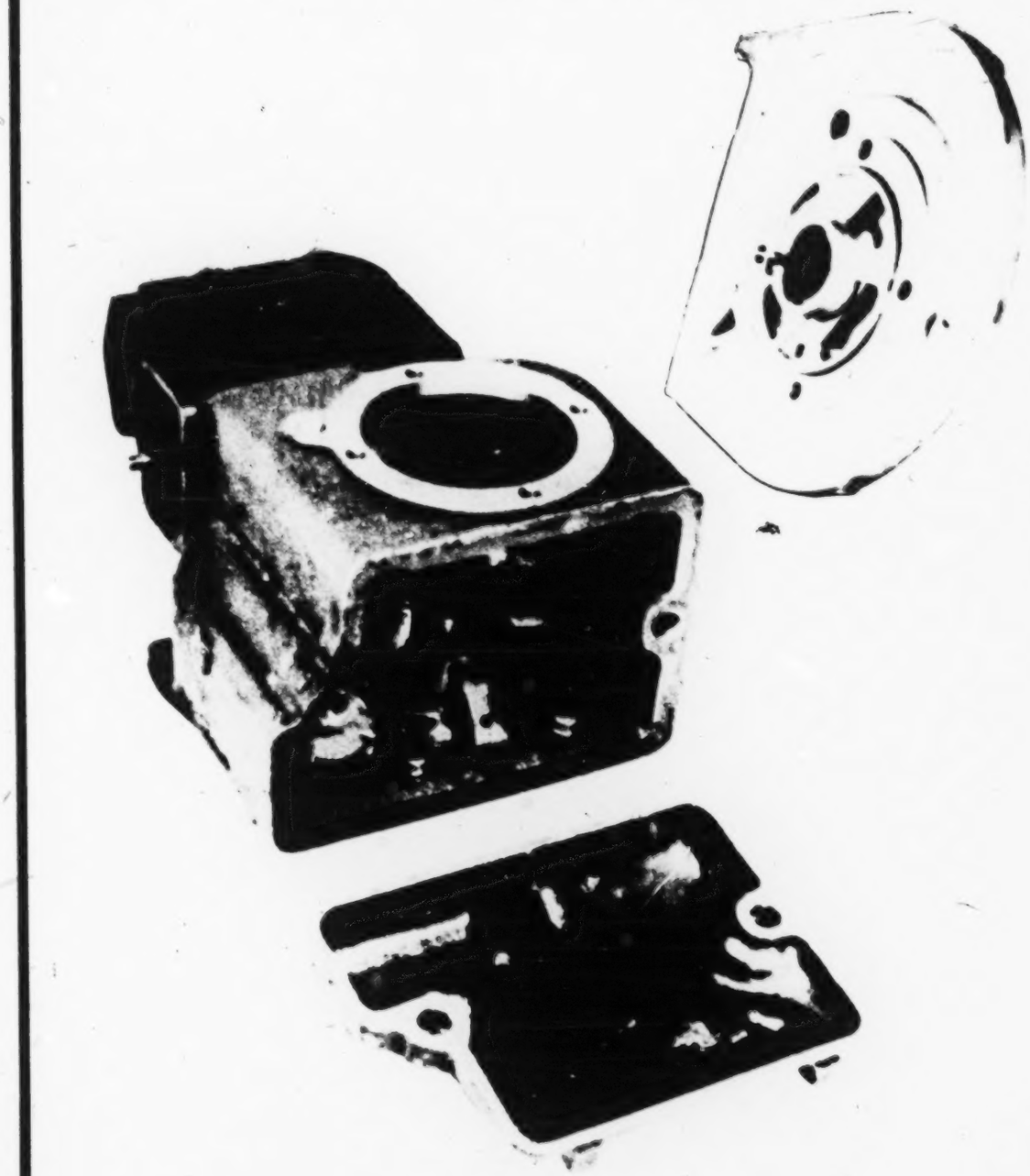

CLINTON VS-700 ENGINE, DEFENDANT'S EXHIBIT D-8.

FIGURE 3

CONVENTIONAL PRIOR ART STRUCTURE OF FOUR-CYCLE ENGINE BODY.

that Lechtenberg had sliced through the hypothetical one-piece engine body it immediately brought out a die cast engine in the form of "a striking and almost slavish copy" of plaintiff's Lechtenberg engine, using photographs of plaintiff's engine parts in its announcements to the trade. Soon after, Lawson Division of Tecumseh Products Co. also went to a close copy of the Lechtenberg engine body in order to enjoy the benefits of die casting.

But the results of Lechtenberg's new "slice" were not limited to making die casting economically feasible. The Lechtenberg "slice" also held significant advantages for a manufacturer who wished to sand cast four-cycle engine bodies:

> Only one pattern would be needed for the main body part, instead of the many different patterns that had always before been needed for sand casting that part. (R 52, 57, 62)
>
> Repair and replacement inventories could be substantially reduced by reason of the universal adaptability of the main body part in the Lechtenberg engine. (R 55-56)
>
> Lechtenberg's "slice" divided the engine body into only two parts (exclusive of the cylinder head[1]), whereas there had always been three or more parts in prior four-cycle engine bodies. Thus assembly was simplified and inventory was further reduced. (RP-527, col. 1, lines 32-41)

A patent claim cannot define an invention so informally as to say that the inventor sliced through a hypothetical one-piece engine body in a new way. Therefore, the

---

[1]The cylinder head always has been made as a separate part on four-cycle engines in order to permit installation of the valves.

claims of the patent in suit define Lechtenberg's new "slice" in terms of what is on each side of it, enumerating the elements of the complete four-cycle engine body that are included in each of the two parts at opposite sides of the "slice".

Thus, quoting from claim 2:

> "The cylinder and all portions of the crankcase including the wall thereof remote from and facing the cylinder, except that wall of the crankcase through which the power takeoff end of the crankshaft passes"

comprises the main body casting, which is one of the two parts of a four-cycle engine body with Lechtenberg's new "slice". What is on the other side of the "slice" is this:

> "said wall through which the power takeoff end of the crankshaft passes is provided by a cover removably secured to" the main body casting.

Accordingly, the claims say that Lechtenberg's "slice" is made so that there is a big main cylinder-crankcase casting on one side of the "slice" and a smaller cover on the other side of it, and so that the cover comprises the wall — the entire wall — of the crankcase at that side of the crankcase through which the power takeoff end of the crankshaft passes. The chart facing p. 12 gives a picture of the two parts at the opposite sides of Lechtenberg's "slice" and shows how one of the claims defines these two parts, and also shows how slavishly defendant's accused engine copies the Lechtenberg arrangement.

It is to be observed that the claims are not limited to a die cast engine body. Lechtenberg invented a new structure, characterized by a new arrangement of the body elements of a single cylinder four-cycle engine,

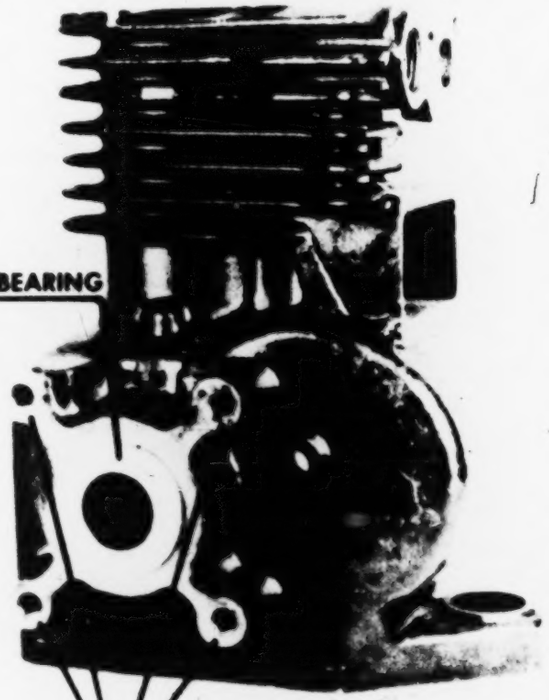

CYLINDER CRANKCASE CASTING OF A BRIGGS & STRATTON VERTICAL SHAFT ENGINE, AND (LOWER) THE ENGINE IN WHICH IT IS INCORPORATED (PLAINTIFF'S EXHIBIT 10).

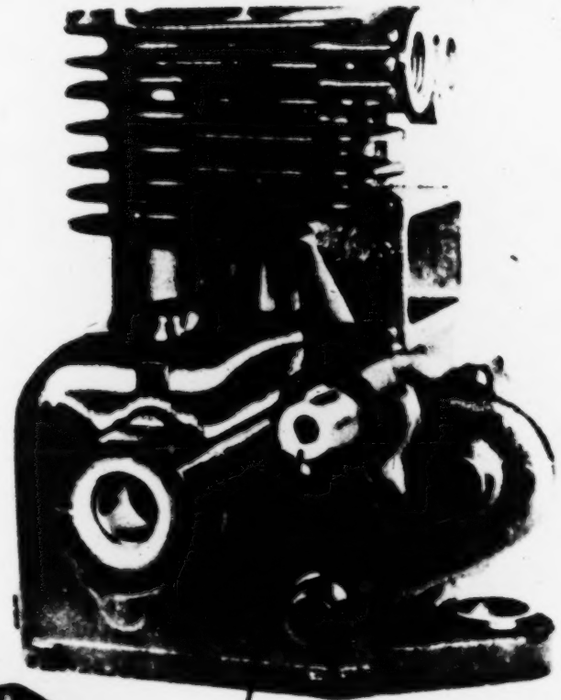

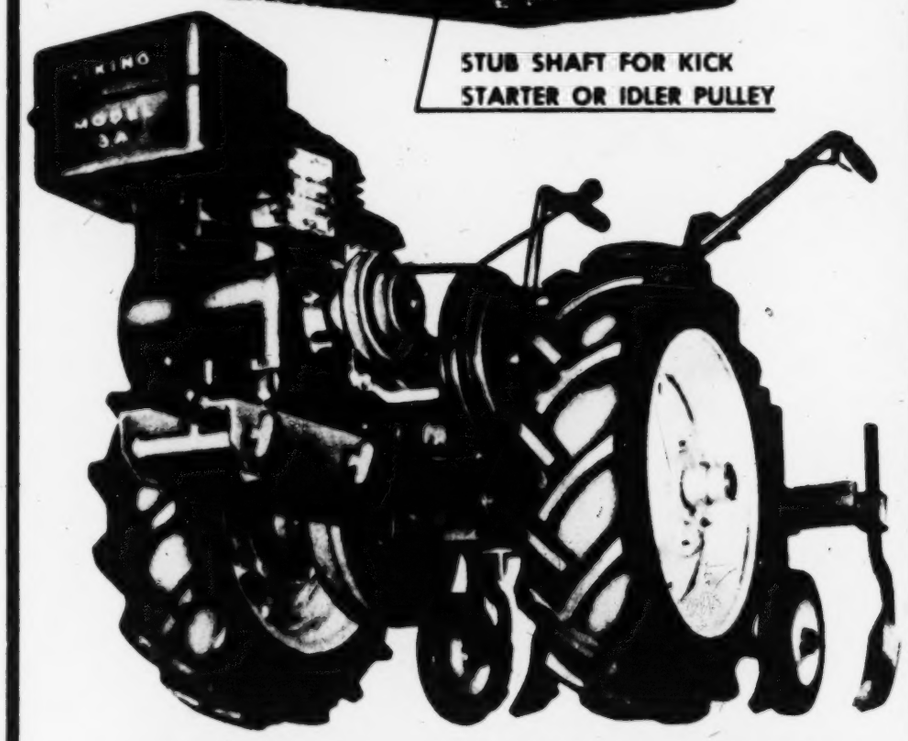

CYLINDER CRANKCASE CASTING OF STANDARD BRIGGS & STRATTON HORIZONTAL SHAFT ENGINE, AND (LOWER) THE ENGINE (PLAINTIFF'S EXHIBIT 9) EMBODYING THAT CASTING INSTALLED ON A GARDEN TRACTOR.

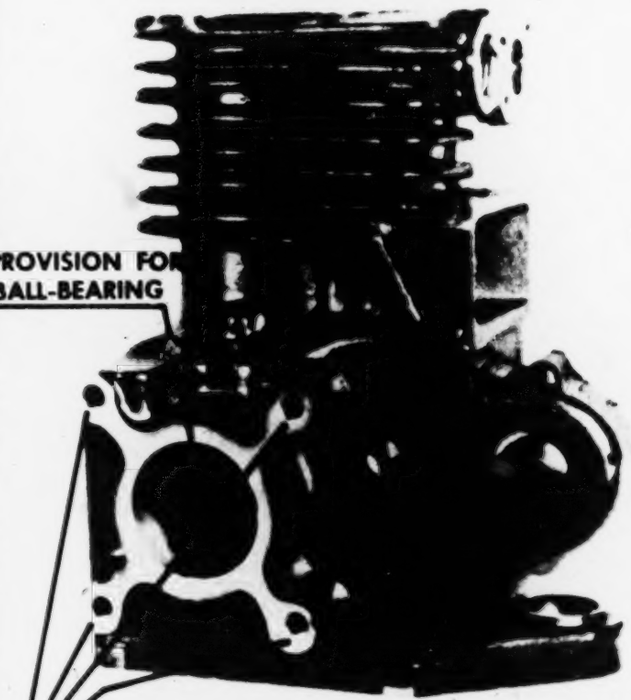

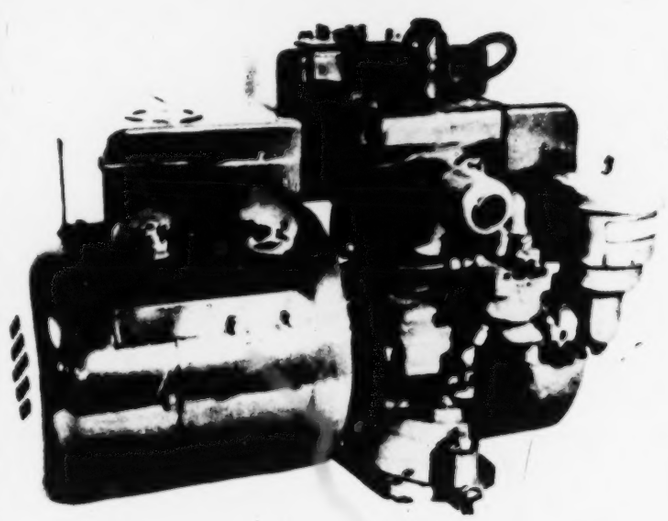

CYLINDER CRANKCASE CASTING FOR BRIGGS & STRATTON HORIZONTAL SHAFT ENGINE WITH BALL-BEARING CRANKSHAFT BEARING AND ACCESSORY MOUNTING BOSSES, AND (LOWER) THE ENGINE INCORPORATING THAT CASTING WITH A GENERATOR INSTALLED ON IT.

FIGURE 4

ILLUSTRATING "VARIABLES" ON SAND CAST CYLINDER — CRANKCASE MEMBERS OF PRIOR ART ENGINE. THESE DIFFERENCES MADE DIE CASTING OF SUCH AN ENGINE ECONOMICALLY IMPRACTICABLE.

which arrangement provided tremendous advantages in a *sand cast* four-cycle engine body with the new "slice", as well as making it *economically feasible* to die cast the body parts.

Both the District Court and the Court of Appeals expressly found that Lechtenberg had made a forward stride in the art (R 460; Appendix to this petition, pp. 4-5, 8), but they held that he had not made a patentable invention because the Lechtenberg engine contains all of the same o'd elements as the engines of the prior art, functioning in the same way and producing the same results. The concurring opinion of Judge Sanborn (pp. 8-9) is particularly concerned with the inferences that might arise from the novelty of Lechtenberg's new arrangement:

> "As a practical matter, Lechtenberg's contribution to the art * * * was a meritorious one and was both *new* and useful. * * * However, * * * the amount of originality and ingenuity, over and beyond novelty and utility, which will constitute invention necessary to sustain a patent *for a combination of old elements* in a crowded art, has increased." (Emphasis supplied)

REASONS WHY THE WRIT SHOULD BE GRANTED

1. The Courts below have decided an important question of Federal law, relating to the interpretation of 35 U.S.C. § 101, which has not been but should be decided by this Court.

2. The clear cut facts of this case, including the express findings that the claims distinguish from the prior art and that Lechtenberg made a forward stride in the art, provide this Court with an occasion to pass upon the

frequently raised question of whether the Patent Codification Act of 1952, in Sec. 103 thereof, has changed the standard of invention which existed prior to the enactment of that section.

3. The importance of this case to a major American industry makes it imperative that there be an early and definitive pronouncement upon the validity of the Lechtenberg patent.

ARGUMENT

I. The Courts Below Have Decided an Important Question Relating to the Interpretation of 35 U.S.C. § 101 Which Has Not Been But Should Be Decided by This Court.

Ordinarily, an inventor makes a change in the structure of a machine for *functional* reasons — to improve the operation of the machine or to make it do something different from what it has done before. The structural change may entail the addition of a new element to an old combination, as in *Goodyear Tire & Rubber Co. v. Ray-O-Vac Co.*, 321 U.S. 275, 64 S. Ct. 593, or it may involve a change in the organization or arrangement of the elements of a combination, as in *Eibel Process Co. v. Minnesota & Ontario Paper Co.*, 261 U.S. 45, 43 S. Ct. 322. In any event, the inventive change *usually* affects what the device *does*.

But Lechtenberg's invention is an extraordinary one in that his structural change in the four-cycle engine body was *solely* for the purpose of bringing about *economy in production* of four-cycle engine body parts, without altering the operation or functions of the engine.

Reduction in cost usually results from a method invention, but Lechtenberg did not make a method in-

CHART NO. 1

LECHTENBERG PATENT NO. 2,693,789 INFRINGED BY DEFENDANT'S SERIES VS100 ENGINE

PLAINTIFF'S MODEL 6BH ENGINE

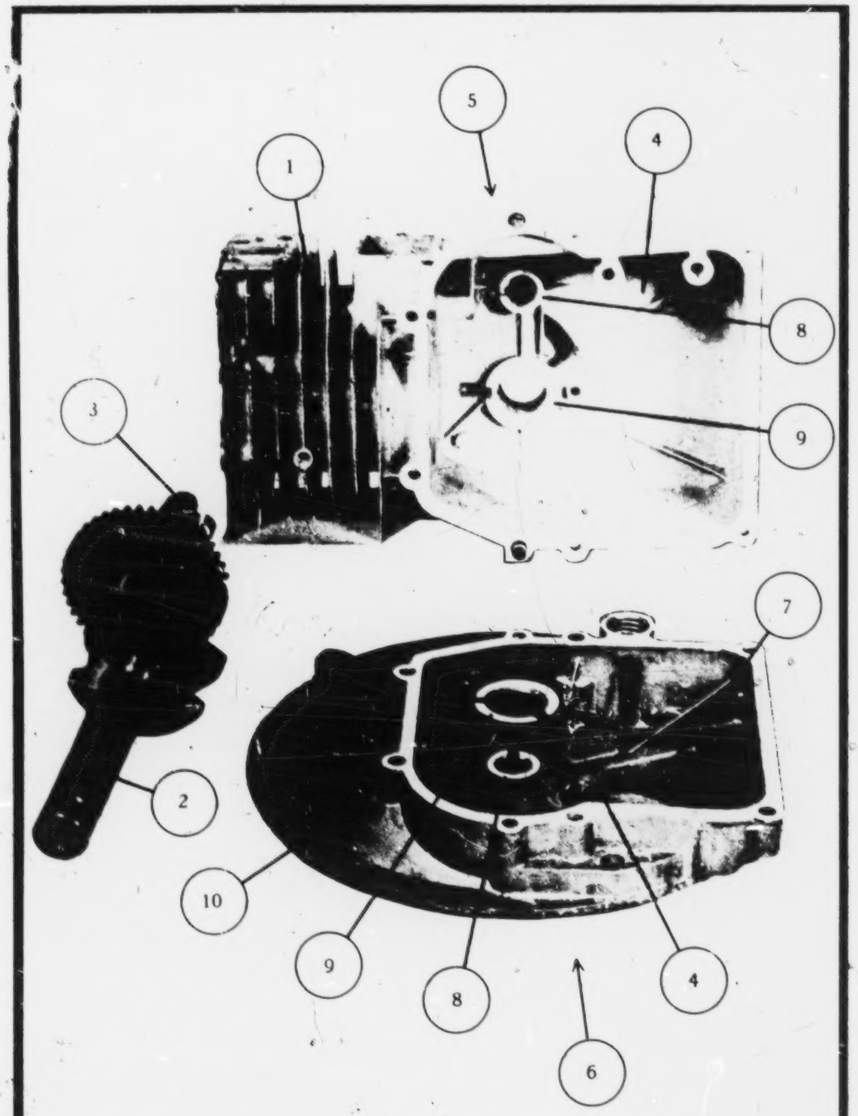

TYPICAL LECHTENBERG CLAIM

Claim 6

A single cylinder, four-stroke cycle internal combustion engine adapted for operation with its cylinder horizontal, said engine having in addition to its

1. cylinder
2. a crankshaft,
3. a cam shaft parallel to the crankshaft, and
4. a crankcase with spaced apart top and bottom walls through which the upper and lower ends of the crankshaft pass,

said engine being characterized by the fact that: the cylinder and all portions of the crankcase except its bottom wall through which the lower end of the crankshaft passes is

5. one casting;

by the fact that said bottom wall comprises

6. a cover removably secured to the casting and having
7. a relatively deep depression;

by the fact that the cam shaft is

8. supported by the cover and the top wall of the crankcase and the
9. bearings for the crankshaft are in said cover and the top wall of the crankcase;

further by the fact that the depression in the cover provides an oil sump;

and said cover being further characterized by

10. mounting means formed integrally therewith for mounting the engine with its cylinder horizontal.

DEFENDANT'S SERIES VS100 ENGINE

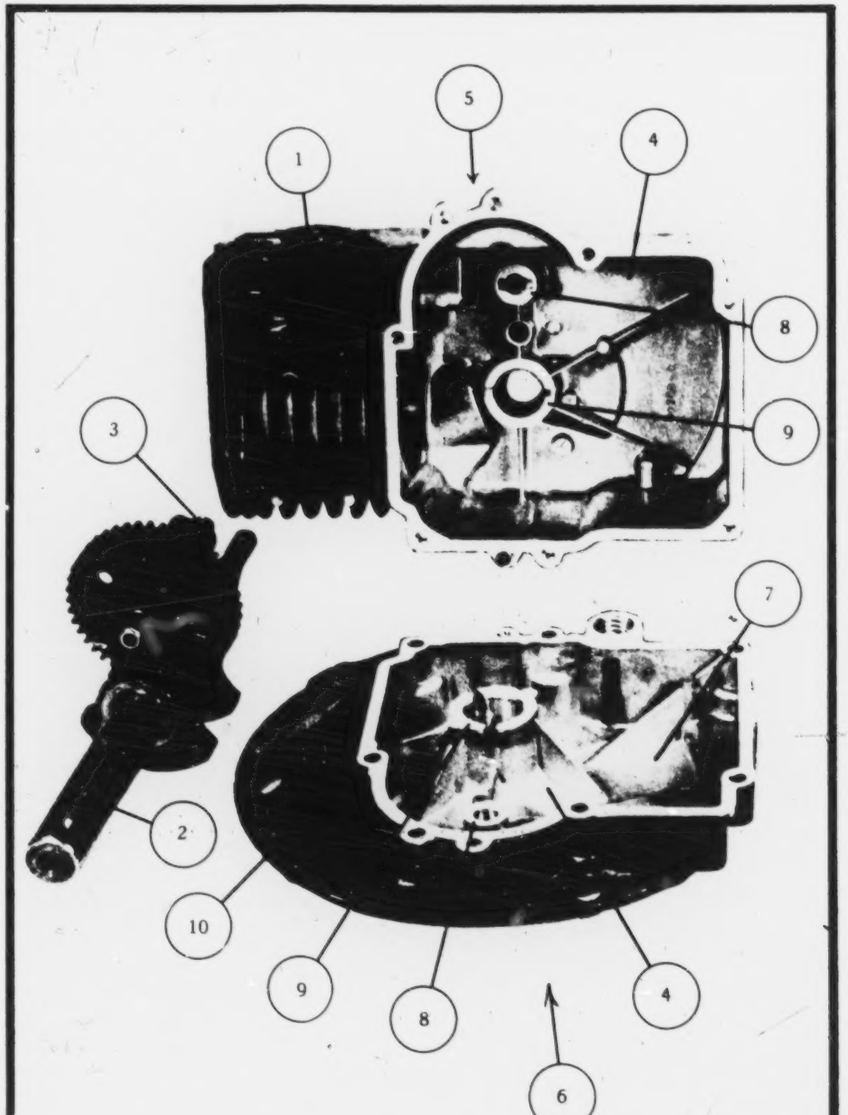

IRA MILTON JONES

vention. His invention makes it feasible to employ a very desirable production method (die casting) that had not previously been available for the manufacture of four-cycle engine body parts, but it also lowers the cost of an engine having body parts produced by the method of sand casting.

The relationship between Lechtenberg's structural change and these results is most easily understood if it is remembered that every "slicing" that had ever been made in the hypothetical one-piece engine body had been made solely and simply for the purpose of achieving *producibility*. Every time a designer designed a four-cycle engine body he selected his theoretical "slices" entirely with an eye to obtaining the greatest *production* advantages — i.e., the lowest cost. Thus, *every* prior art engine body ever built represents an unsuccessful assault upon the problem finally solved by Lechtenberg. Lechtenberg's "slice" is the best that has ever been made because it resulted in the greatest production advantage that had ever been achieved, as shown by the phenomenal 24% reduction in price of the Lechtenberg engine.

This case thus raises the question of whether a structural change such as Lechtenberg made, which brings about no alteration in the function of the changed machine, but which does favorably affect its *producibility*, can constitute patentable improvement under 35 U.S.C. § 101. The holdings of the courts below answer that question in the negative and stand for a rule that patentability must be predicated upon a structural change which affects what the machine does.

The question here under consideration is *not* the usual one of whether a given change is sufficiently unobvious to constitute invention, as "invention" is defined in 35

U.S.C. § 103. The question here is: Is an improvement in producibility the *kind* of invention that is patentable under 35 U.S.C. § 101? Sec. 101 assumes that an invention or discovery has been made, and tells what the invention must *relate to* in order to be patentable. (Conversely, Sec. 103 assumes that an improvement has been made in one of the fields covered by Sec. 101 and tells how *big an advance* it must be to constitute invention.)

Petitioner knows of no case in which the question here in issue has been placed before this Court for determination. It is presented by this case in very clear cut form because all of the Lechtenberg claims are directed to a structural change which the courts below have expressly found to be novel.

The only previous case that comes near to dealing with this question was decided by the Court of Appeals for the Eighth Circuit in a way that is fundamentally in conflict with the instant decision. In *Sbicca-Del Mac v. Milius Shoe Co.*, 145 F. (2d) 389 (1944), two patents were involved, one containing claims to a method and to a shoe produced by that method, and the other containing only method claims. The invention reduced the cost of the shoe but made no functional change in it.

Specifically recognizing the question presented by the instant case, and relating it to the patent statute which was the counterpart of 35 U.S.C. § 101 here involved, the court said in the *Sbicca-Del Mac* case (145 F. (2d) at 393-394):

> "In determining the validity of the patents, therefore, the question presented is whether these advances constitute invention within the meaning of 35 U.S.C.A. § 31. The statute provides that 'Any person who has invented or discovered any new and useful art, machine, manufacture * * * or any new

> and useful improvements thereof * * * not known or used by others * * * may * * * obtain a patent therefor.' We think the * * * patents disclose a new and useful contribution to the art of shoemaking. The patents are not valid, however, unless they reveal invention or discovery."

Thus the court held that the change whereby the cost of the shoe was reduced without altering its function was patentable under the counterpart of 35 U.S.C. § 101, provided the change was an unobvious one. However, the *Shicca-Del Mac* decision turns primarily upon the method aspect of the inventions, rather than upon the change in shoe structure, and it therefore seems to present no clear cut answer to the question raised by the instant case, wherein the structural change made by Lechtenberg reduced the price of an engine regardless of the method used in producing its body parts.

If the *Shicca-Del Mac* case stands for an explicit answer to the question here raised, then its answer is in direct conflict with the decisions in this case by both of the courts below. That the question has been incorrectly answered in this case is suggested by the language of the statute itself, for 35 U.S.C. § 101 says that an invention is patentable if it relates to a "new and useful * * * machine, * * * or any new and useful *improvement* thereof." It is submitted that a change which brings about a reduction in cost (without reduction in quality or other counterbalancing disadvantages) must constitute an "improvement", because a thing is certainly improved when its desirability is increased.[1] This reasoning

---

[1]The tremendous commercial success of the Lechtenberg engine shows that the buying public has found increased desirability in it. Plaintiff has built a huge new plant solely for the production of Lechtenberg engines (R 85); defendant admits that its "striking and almost slavish

is consistent with the stand taken by the Eighth Circuit Court of Appeals in the *Sbicca-Del Mac* case.

However, it is apparently not obvious, in view of what the two courts below have held in this case, that a change in an article which brings about a significant price reduction without change in function can be an "improvement" within the meaning of 35 U.S.C. § 101. A definitive pronouncement by this Court is imperative.

II. This Court Should Pass Upon the Question of Whether the Defense of "Aggregation" is Applicable to the Lechtenberg Claims.

The claims of the Lechtenberg patent define a *new arrangement* of the elements comprising a conventional four-cycle engine body, which arrangement brings about greatly improved producibility of the engine body. Heretofore the test of aggregation has always been applied to a finished, assembled device, and such a device has been held to be uninventive if its elements were old and functioned in an old way to produce an old result. But the Lechtenberg invention is not primarily concerned with the engine body in the completely assembled engine, or with the engine as an operating mechanism. It relates to the engine body as *parts in production*. After the body parts have been made, the invention has served its purpose. Lechtenberg's invention is directed entirely to improving the *producibility* of the engine body, and

---

copy" of Lechtenberg's engine is its best selling engine (R 45); and since the advent of the Lechtenberg engine the majority of rotary power lawn mowers sold in the United States have been powered by four-cycle engines, whereas previously the less efficient two-cycle engine dominated the power mower field because of its low cost and light weight. (R 54, 263, 266)

therefore the body elements perform in the new arrangement the same functions they have always performed. Under these circumstances, can the claims be tested by the rule that there is no invention in an aggregation of old elements combined in an old way and producing no different function than they have always produced?

The courts below answered this question in the affirmative and held the Lechtenberg patent invalid because they found: "That all the elements were old and that the ten claims constitute an unpatentable aggregation." (Appendix to this petition, p. 7)

The courts below expressly found that Lechtenberg's structural arrangement is novel and they expressly recognized that the result that it brought about was a phenomenal cost reduction. Hence, when they said that what Lechtenberg produced was "an unpatentable aggregation", they were holding that the change he made was not an "improvement" which is patentable under the provisions of Sec. 101.

That the courts below erroneously applied the test of aggregation to the Lechtenberg patent is suggested by *Eibel Process Co. v. Minnesota & Ontario Paper Co.*, 261 U.S. 45, 43 S. Ct. 322. In *Eibel Process* one element of an old paper making machine was given a tilt or inclination, whereas previously it had always been horizontal. No element was added to or removed from the old machine. The result of the rearrangement was a tremendous increase in the productive capacity of the machine, and the patent was held valid even though its claims necessarily recited the old elements of an old machine, each having its old function. Just as with Lechtenberg, the claims in *Eibel Process* defined a *rearrangement* that produced a new result.

In *Eibel Process,* however, the result flowing from the new arrangement was a betterment of the *function* of the machine, and the claims defining the new arrangement were therefore held to be valid. But in this case the new arrangement of engine body parts defined by the claims has nothing to do with the function of the engine but relates only to its *producibility* and *cost,* and this case therefore presents the unresolved question of whether the claims can be held invalid for aggregativeness for that reason.

It remains for this Court to make a definitive pronouncement upon whether the test of "aggregation" has any relevance to the test of patentable subject matter laid down in 35 U.S.C. Sec. 101.

III. This Case Presents a Clear Cut Opportunity for this Court to Make a Definitive Pronouncement upon the Standard of Invention Laid Down in 35 U.S.C. § 103.

The concurring opinion of Judge Sanborn (Appendix to this petition, p. 8) sets forth, in its opening paragraph, that the engine art is a crowded one; and it might have added that the four-cycle engine industry is intensely competitive. Judge Sanborn also expressly recognized that Lechtenberg achieved an engine which weighed about half as much as its predecessor of the same horsepower, and cost about 24% less, and that Lechtenberg's engine was "of course" soon copied by competitors.

While saying that this phenomenal advance "was a meritorious one and was both new and useful", Judge Sanborn concurred in the holding of invalidity with the comment that "the amount of originality and ingenuity, over and beyond novelty and utility which will constitute invention necessary to sustain a patent for a combination of old elements in a crowded art, has increased," citing a number of cases which were decided by this Court before the enactment of the Patent Codification Act of 1952. (P. 9) Thus the Court of Appeals for the Eighth Circuit held that the standard of patentable invention has risen to the point where the sudden attainment of a 24% price reduction and a 50% weight reduction in a crowded art and a highly competitive field must be held to result from nothing beyond mere routine skill.

That holding points to the importance to the American industrial economy of a review by this Court of the present status of the standard of patentability, because the United States patent system provides the incentive for our industrial progress.

Ever since the enactment of the new Patent Codification Act of 1952 this Court has been looked to for a holding on the question of the effect of Sec. 103 of that act upon the "raised" standard of invention referred to in Judge Sanborn's opinion. In effect, Judge Sanborn has said that the new statute did not change the standard of invention, and he has implied that it is, if anything, still rising.

The need for this Court's definitive pronouncement upon the question has been particularly apparent since Judge Hand wrote his well-known decision in *Lyon v. Bausch & Lomb Optical Co.*, 224 F. (2d) 530 (C.A. - 2, 1955, cert. den., 76 S. Ct. 193, 350 U.S. 911), in which he specifically held that in enacting 35 U.S.C. § 103 congress had intended to restore the standard of invention to what it had been in 1850 when this Court decided *Hotchkiss v. Greenwood*, 11 How. 248, 13 L. Ed. 683.

The facts of this case are clear cut, and the question of the applicable standard of invention posed by Judge Sanborn's concurring opinion is distinctly presented in a manner which gives this Court an opportunity to render the definitive pronouncement that has been so long needed.

IV. The Importance of This Case to American Industry Warrants a Definitive Pronouncement by This Court upon the Validity of the Lechtenberg Patent.

It is not too much to say that the Lechtenberg invention has revolutionized the small four-cycle gasoline engine industry.

The tremendous demand for such engines, resulting from the cost reduction achieved by Lechtenberg, has compelled plaintiff to build a huge new plant devoted exclusively to the production of Lechtenberg engines. In this new building, covering about ten acres, hundreds of persons have been given employment by the Lechtenberg invention, turning out hundreds of thousands of such engines every year. (R. 55)

Defendant has admitted that its "striking and almost slavish copy" of the Lechtenberg engine is its best seller. (R 45) In an affidavit filed with the District Court at one point in the proceedings herein, it was stated that defendant employs some 2,000 persons in the production of its accused engine.

A suit is now pending in the United States District Court for the Eastern District of Wisconsin against the Lawson Division of Tecumseh Products Company, charging Lawson with infringement of the Lechtenberg patent. Lawson, too, finds that its copy of the Lechtenberg engine is its best seller.

These manufacturers represent the major portion of the four-cycle engine industry, and together their sales of such engines exceed one hundred million dollars annually. They furnish engines to numerous other manufacturers who build such relatively expensive machines as power lawn mowers, cement and plaster mixers, pow-

er saws, vehicle refrigeration equipment, electric generators, etc. (R 51, 53)

Thus many customers of the small engine industry are following this case closely, realizing that they are prospective infringement suit defendants as well as being interested in the patent system as a whole.

In the power lawn mower field alone, Lechtenberg has wrought a major upset; formerly the majority of rotary mowers were equipped with two-cycle engines, but now most of them are powered by four-cycle engines, all of which, with rare exceptions, have die cast bodies of the Lechtenberg type. (R 54)

It is submitted that the importance of this case, not only to the parties before the Court, but to the American industrial system as a whole, merits this Court's consideration of the unresolved questions of patent law which this case raises.

CONCLUSION

This case presents an important question of first impression concerning the interpretation of 35 U.S.C. § 101, and also presents the question of the status of the "standard of invention" under 35 U.S.C § 103 as to which this Court's definitive pronouncement has been sought since the enactment of the Patent Codification Act of 1952. It is submitted that certiorari should be granted so that this Court may pass upon these important unresolved questions.

Respectfully submitted,

IRA MILTON JONES
JAMES R. CUSTIN
110 East Wisconsin Avenue,
Milwaukee 2, Wisconsin,
Counsel for Petitioner

November 29, 1957

APPENDIX TO PETITION FOR CERTIORARI

OPINION OF THE UNITED STATES COURT OF APPEALS FOR THE EIGHTH CIRCUIT

OPINION OF THE

United States Court of Appeals
FOR THE EIGHTH CIRCUIT

No. 15,725

Briggs & Stratton Corporation,
Plaintiff-Appellant,

v.

Clinton Machine Co., Inc.,
Defendant-Appellee.

Appeal from the United States District Court for the Northern District of Iowa.

No. 15,729

Clinton Machine Co., Inc.,
Defendant-Cross Appellant,

v.

Briggs & Stratton Corporation,
Plaintiff-Cross Appellee.

Appeal from the United States District Court for the Northern District of Iowa.

[August 30, 1957.]

Ira Milton Jones and James R. Custin (E. Marshall Thomas was with them on the brief), for Briggs & Stratton Corporation.

E. J. Balluff and Arthur Raisch (Charles R. McKinley, Wayne G. Cook and Hal F. Reynolds were with them on the brief), for Clinton Machine Company.

Before SANBORN, WOODROUGH and JOHNSEN, Circuit Judges.

WOODBURY, Circuit Judge.

The plaintiff in this action charged the defendant with infringement of plaintiff's United States patent No. 2,605,753 issued August 5, 1952 to Dorthy H. Madle, administratrix, and with infringement of its United States patent No. 2,693,789 issued November 9, 1954, to L. J. Lechtenberg and the appeal No. 15,725 is taken by the plaintiff to reverse the judgment rendered against it in the action. The court found that all the claims relied on for each of the two patents which were in suit constituted an aggregation of old elements which in the aggregation perform and produce no new or different function than that heretofore performed or produced by them and that the patents were invalid. The court also held as to each patent that if the patent claims defined inventive combination, the defendant infringed. The defendant appeals in No. 15,729 in respect to that finding of infringement.

The district court makes a complete presentation of the issues and the evidence and proceedings had in the court in its statement, findings of fact and conclusions of law and order for judgment reported at 147 F. Supp. 361, and we proceed to consideration of the points presented on the appeal without repeating the matter reported.

1. As to plaintiff's Madle patent, No. 2,693,789.

The district court declared that the question for its determination was as to what patentable invention was shown by the only claim of that patent relied on by plaintiff, to-wit: claim No. 5, and plaintiff's internal combustion engine embodying the same and after setting forth each and all of the elements of the claim and describing the engine embodying them, the court compared them with prior art and found them to be old and that each performs the same function in plaintiff's structure that it had pre-

viously performed. Our own examination and study of the question presented convinces that the district court was not in error in any of its findings or conclusions.

On its appeal from the judgment in respect to the Madle patent, plaintiff relies largely upon the testimony of the witness, Harry Shore, who testified concerning the operation of plaintiff's so called Magnematic ignition system which was included in the one cylinder four cycle engines made and sold by plaintiff. The system included the elements claimed in plaintiff's Madle patent and the engines worked well. According to Shore they worked better under extremely hard conditions than plaintiff's earlier models. But neither Shore nor any other witness was able to point out any element of the patent that is not present in prior art functioning in the same way to produce the same result and the entire claimed combination, that is the current generating device as a whole, is an old expedient in the prior art. The part of it that may seem to a lay man to be the most ingenious, that is, the part that avails of the centrifugal force which is generated to regulate the locating, advancing and retarding of the spark, goes back half a century. It would indeed be strange if the one cylinder four cycle engine the plaintiff puts out since 1954 worked no better than such engines used to work. As has been pointed out for defendant, plaintiff's engines include a number of helpful features not specified in the Madle patent claims and a vast experience enlightens their manufacture.

It appeared to the district court that defendant's accused engine was like the plaintiff's and infringed if the claim defined inventive combination. Claim No. 5 of the Madle patent contains an express limitation as to the location of the "cam surface on said member [i.e., the centrifugally responsive member] engaged by said cam fol-

lower." Col. 1, Line 71. The claim requires that the position of the members be determined by centrifugal force acting on the member. The only element in defendant's structure whose position is determined by centrifugal force acting on it is the centrifugally responsive arm which does not have a cam surface thereon. The defendant's structure is said to follow that of the old patent to Phelon, No. 2,338,994 (1944). In Phelon as in defendant's structure the rotational position of the cam sleeve is adjusted to vary the spark setting, not by centrifugal force acting on the cam sleeve, but through a lever action exerted on the sleeve by the centrifugally responsive arm. A similar construction is shown in Sturtevant No. 740,781 (1903). A cam surface on a centrifugally responsive arm is shown in Farwell, No. 816,083 (1906). Defendant contends that in an art as crowded as that involved here the difference though involving only ordinary mechanical understanding and skill is sufficient to avoid infringement.

But we conclude that the adjudication by the District Court that the Madle patent is invalid was without error and should be affirmed. The question as to its infringement by the Clinton company is therefore moot and that company's appeal from the contingent declaration of infringement in No. 15,729 should be dismissed without costs.

2. As to plaintiff's Lechtenberg patent No. 2,693,789.

The plaintiff relied at the trial upon ten claims of this patent which the court set out in full at 147 F. Supp. 368 to 371. The court also described the plaintiff's engines made in accord with the disclosure of the patent and their uses. It found that they met with marked commercial success and were adapted to a variety of installations without any alteration in the cylinder crank case casting; that the weight of the engine was reduced by using aluminum

and the cost by using die casting and that the engine was "light, compact, reasonably priced, highly adaptable and outstanding in its field." But when it had given the case further study and considered additional prior art adduced by defendant which had not been before the court at the first trial and had not been considered by the patent office, the court found that none of the disclosures of the patent constituted patentable invention in view of the prior art and prior use, and the combination constituted unpatentable aggregation.

On this appeal, the appellant admits that its engine embodying the Lechtenberg patent "functions in all respects like a conventional prior art four cycle engine" and appellant makes no attempt to refute the court's findings that the elements defined in its ten claims are all old. Nor does it dispute the findings that they function in the combination as they have done heretofore. But it contends that not withstanding its engine does the same work by the same means as the engines of prior art, the court erred in finding and concluding the patent to be invalid. The argument is summed up in appellant's declaration that "the invention resides in devising a four cycle engine which functions in all respects like a conventional prior art four cycle engine, but which has body parts of such form that they can be produced by an advantageous method theretofore not practicable for the production of such parts." The "advantageous method" referred to is die casting certain body parts instead of sand casting them, but "plaintiff's brief emphasizes, to the point of surfeit, that Lechtenberg invented neither the process of die casting, nor any improvement in the technique of die casting."[1]

---

1 Quoted from Appellant's reply brief.

Proceeding from these premises, appellant contends that the court erred in failing to find invention by Lechtenberg as so defined and the argument to that effect is greatly extended. But it does not include or proceed upon any reference to or quotations from the claims of the patent.[2] Some of the claims of the patent broadly cover two cycle single cylinder engines and both sand and die cast cylinder and crank case elements and they contain no such limitation or definition of invention as appellant contends for.

The trial court rightly directed its study to the disclosures of the patent and its claims and based its decision on them. The patent discloses an engine in which the cylinder and crank case, save for the wall at the power take off end of the crank shaft, is a single casting and the casting is specifically defined to include sand casting and die casting. That is, the elements are produced by the ordinary means used in the art fully disclosed in the prior art publications of the Lauson engine and Clinton 700 series engine and Bosma, Conover and Vansickle patents. All the claims are drawn to a cylinder and crank case which is a single or one casting regardless of the casting method to obtain the casting and the advantage attributed to its operation is the same whether it is sand cast or die cast. The court found the advantage to be that the engine could be adapted to various and different uses. But that feature was old and as the court found, it was disclosed by the patents to Vansickle, No. 615,766, Conover, No. 2,227,247 and Bosma, No. 2,346,148.

We find no error in that conclusion and when we turn back to the theory of invention and patentability here contended for, we find it to be without merit. The claims were

---

2 The only citation from the claims in the entire brief is the last seven lines of claim one relating to interchangeability of parts.

made broad to cover an engine element produced by either kind of casting which resulted in certain advantages in use and when it is found as in this case, that such elements in internal combustion engines were old, and their combination an unpatentable aggregation, the patent can not be saved by asserting limits to the claim not contained in them. The Lechtenberg patent is not a method or process patent and it has no claims that would justify a patent for invention in the method of production of its elements. Its claims are broadly for two and four cycle and sand cast and die cast elements and it is not entitled to the patent monopoly unless its invention was as broad as its claim.

The district court studied the disclosures of the patent and the claims. It found from that study that none of the disclosures constituted patentable invention in view of prior art and use. That all the elements were old and that the ten claims constitute an unpatentable aggregation.

We hold that the court was without error in so proceeding and concluding. As the Supreme Court said in *Graver Tank & Mfg. Co. v. Linde Air Products Co.*, 336 U.S. 271-277 (1949): "We have frequently held that it is the claim which measures the grant to the patentee." The court having properly found that all of the elements of the claim were old and that the combination of them constituted unpatentable aggregation was not in error in adjudging the patent invalid. The contention for appellant that it was entitled to the patent monopoly on engines having single die cast cylinder and crank case parts even if the elements were all old and the combination merely an "aggregation", we find to be without merit.

It appeared to the court that if the patent claims define inventive combination there was infringement, but upon

adjudication that the patent is invalid the question of infringement becomes moot. We conclude that the District Court did not err in holding the patent invalid and that the appeal from the declaration as to infringement should be dismissed.

The judgment in No. 15,725 dismissing the action for invalidity of the patents sued on is affirmed. The appeal in No. 15,729 is dismissed without costs.

SANBORN, Circuit Judge, concurring.

The engine disclosed by the patent to Lechtenberg, who was a development engineer employed by Briggs & Stratton Corporation, resulted from his being assigned the problem of producing the best four-cycle air-cooled die-cast aluminum gasoline engine that he was capable of making. The cast iron Briggs & Stratton engine which was then being made, and which was largely supplanted later by the Lechtenberg engine, was good, but weighed 36 pounds and sold to manufacturers for $30.45. The engine which Lechtenberg developed and patented weighed 19½ pounds and sold for $21.25. It could be either die cast or sand cast. Its lightness was due to the use of aluminum, and the reduction in cost of production to die casting.

As a practical matter, Lechtenberg's contribution to the art of producing a light, cheap, efficient, air-cooled engine, suitable for furnishing power to rotary lawn mowers and like devices, and susceptible of being die cast, was a meritorious one and was both new and useful. It met with commercial success and was, of course, soon copied by competitors. It is not strange that the District Court first concluded that the Lechtenberg patent was valid and in-

fringed. See and compare, *Diamond Rubber Co. of New York* v. *Consolidated Rubber Tire Co.*, 220 U.S. 428, 440-444, and *Eibel Process Co.* v. *Minnesota & Ontario Paper Co.*, 261 U.S. 45, 63-64. However, as we have pointed out in a number of cases since the Supreme Court decided *Cuno Engineering Corp.* v. *Automatic Devices Corp.*, 314 U.S. 84, the amount of originality and ingenuity, over and beyond novelty and utility, which will constitute invention necessary to sustain a patent for a combination of old elements in a crowded art, has increased. The conclusion of the District Court is not out of line with our recent decisions in such cases. See and compare: *Frank Adam Electric Co.* v. *Colt's Patent Fire Arms Mfg. Co.*, 8 Cir., 148 F.2d 497, 502-503; *Koochook Co., Inc.* v. *Barrett*, 8 Cir., 158 F.2d 463; *Hall Laboratories, Inc.* v. *Economics Laboratory, Inc.*, 8 Cir., 169 F.2d 65; *Alemite Co.* v. *Jiffy Lubricator Co.*, 8 Cir., 176 F.2d 444; *Miller* v. *Tilley*, 8 Cir., 178 F.2d 526; *Minneapolis-Moline Co.* v. *Massey-Harris Co.*, 8 Cir., 208 F.2d 73; and *Steffan* v. *Weber Heating and Sheet Metal Co.*, 8 Cir., 237 F.2d 601. See also: *Blish, Mize and Silliman Hardware Co.* v. *Time Saver Tools, Inc.*, 10 Cir., 236 F.2d 913-916.

Implications in support of the conclusion of the District Court that both patents in suit are invalid, we think reasonably may be drawn from comparatively recent cases decided by the Supreme Court, such as *Detrola Radio & Television Corp.* v. *Hazeltine Corp.*, 313 U.S. 259, 267-269; *Cuno Engineering Corp.* v. *Automatic Devices Corp.*, 314 U.S. 84, 88-92; *Muncie Gear Works, Inc.* v. *Outboard, Marine & Mfg. Co.*, 315 U.S. 759, 768; *Goodyear Tire & Rubber Co., Inc.* v. *Ray-O-Vac Co.*, 321 U.S. 275, 279 (in which a patent was sustained by a 5 to 4 decision in an opinion by the late Mr. Justice Roberts, which met with a strong dissent); *Dow Chemical Co.* v. *Halliburton Oil*

Well Cementing Co., 324 U.S. 320, 328, 330; *Sinclair & Carroll Co., Inc.* v. *Interchemical Corp.*, 325 U.S. 327, 330-331; *Funk Brothers Seed Co.* v. *Kalo Inoculant Co.*, 333 U.S. 127, 131-132; *Mandel Brothers, Inc.* v. *Wallace*, 335 U.S. 291, 295-296; *Jungersen* v. *Ostby & Barton Co.*, 335 U.S. 560, 566-567 (in which the late Mr. Justice Jackson said in his dissenting opinion, page 572: "But I doubt that the remedy for such Patent Office passion for granting patents is an equally strong passion in this Court for striking them down so that the only patent that is valid is one which this Court has not been able to get its hands on."); *Great Atlantic & Pacific Tea Co.* v. *Supermarket Equipment Corp.*, 340 U.S. 147, 150-158; *Crest Specialty* v. *Trager*, 341 U.S. 912, reversing, per curiam, *Trager* v. *Crest Specialty*, 7 Cir., 184 F.2d 577.

I concur in the affirmance of the judgment appealed from in No. 15,725. I also agree that we need not concern ourselves with the question whether the District Court correctly held that if the patents in suit were valid they were infringed by the defendant. Since no one can infringe an invalid patent, there is no necessity for our attempting to determine whether the accused devices would infringe the patents if they were valid. See *Dow Chemical Co.* v. *Halliburton Oil Well Cementing Co.*, supra, page 331 of 324 U.S. That might all depend upon what range of equivalents the patentees would be entitled to if the validity of the patents were to be sustained. I concur in the dismissal of the cross-appeal of the defendant, No. 15,729, as moot.

A true copy.

Attest:

Clerk, U. S. Court of Appeals, Eighth Circuit.